J. Fac. Agr. Hokkaido Univ., Vol. 68, Pt. 1 : 1~16 (1998)

Dynamics of Tractor-implement Combinations on Slopes (Part III)
—— Stability Regions and Optimum Design Parameters ——

Mohammed G. YISA, Hideo TERAO, Noboru NOGUCHI, Mamoru KUBOTA
Agricultural Vehicle Systems Engineering, Faculty of Agriculture,
Hokkaido University, 060 Sapporo, Japan

Introduction

Determining the stability of agricultural tractors has been a concern of tractor designers and researchers for many years. Studies were conducted to determine the factors influencing the directional stability of a tractor on a slope[1,2]. Analysis have been performed describing the tipping phenomenon of tractors under static conditions[3,4]. Dynamic studies relating the inertia properties and energy levels during rollover have been done[5]. A comprehensive study of tractor stability and control on slopes with straight traverses of various slopes was conducted by Gilfillan[6]. His work established stability and control-limits of tractor operation on slopes without a steering maneuver.

This research established stability limits for tractor-trailed and tractor-mounted systems. Furthermore, safe operating regions in terms of heading angles ψ and slope angles φ have been proposed. Conditions under which stability is lost have been determined and design parameters which affect stability were identified. The values of these parameters which maximize safe operating regions on a slope have been determined. The analysis mentioned above were carried out by computer simulation. The overall objective of the study is to be able to analyze tractor and implement models at design stage in terms of their general stability and slope performance. Hence, optimum design of tractors and implements for use on slopes could be achieved.

Nomenclature

A : the maximum obtainable value of tractive coefficient
B : determines the "shape" of the curve
b_j : tyre width [m]
C_{tl} : traction coefficient
C_a : cornering force coefficient
d_j : tyre diameter [m]
GSL : general stability region
g : acceleration due to gravity [m/s^2]
H : drawbar hitch point

h_1 : tractor centre of gravity height from the ground [m]
h_2 : drawbar hitch height from the ground [m]
h_3 : implement centre of gravity height from the ground [m]
I_{zz} : yaw moment of inertia of tractor [N/ms^2]

I_{zzi} : yaw moment of inertia of implement [N/ms^2]
L_j : lateral force [N], $j=1, 2, 3, 4, 5, 6$
l_1 : wheelbase [m]
l_2 : front tread width [m]
l_3 : rear tread width [m]
l_4 : distance from rear axle to centre of mass [m]
l_5 : distance from rear axle to drawbar hitch [m]
l_6 : distance from rear wheel to drawbar hitch [m]
l_8 : distance from drawbar hitch to implement centre of gravity [m]
l_9 : distance from implement centre of gravity to implement axle [m]
l_{10} : implement width [m]
M : tractor mass [kg]
m : implement mass [kg]
N_j : normal force [N], $j=1, 2, 3, 4, 5, 6$
N^*_j : corrected normal force [N], $j=1, 2, 3, 4, 5, 6$
O : tractor centre of gravity
O_1 : implement centre of gravity
ODPR : optimum design parameter region
OSL : overturning stability limit
OSR : overall stability region
P_1 : drawbar force [N]
R_{fa} : longitudinal load transfer distribution [%]
R_{rl} : lateral load transfer distribution [%]
RKGM : Runge-Kutta-Gill Method
r_j : tyre radius [m]
SSL : slip stability limit
s : drive wheel slippage
T_j : traction force [N], $j=1, 2, 3, 4, 5, 6$
TMIC : tractor-mounted implement combination
TTIC : tractor-trailed implement combination
USR : uncontrollable slip [−]
v_x, v_y : components of the translational velocity of tractor [m/s]
v_{xi}, v_{yi} : components of the translational velocity of the implement [m/s]
X, Y : ground fixed coordinate system
x, y : vehicle fixed coordinate system
x_i, y_i : implement coordinate system
z_j : effective rolling radius [m]

α_f : front tyre slip angle [rad]
α_I : implement tyre slip angle [rad]
α_o : sideslip angle [rad]
α_{oi} : implement sideslip angle [rad]
α_r : rear tyre slip angle [rad]
δ : steer angle [rad]
φ : slope angle [red]
θ : articulation angle [rad]
ω_z : yaw velocity of the tractor centre of gravity [rad/s]
ω_{zI} : yaw velocity of the implement centre of gravity [rad/s]
ψ : heading angle [rad]

Modeling of tyre forces

The underlining role played by tyre forces with regard to the dynamics and stability of agricultural tractors can not be over emphasized. The tyres constitute the only suspension for the tractor and it is through them that the tractor interacts with the surface on which it moves. Because of this, a great importance is attached to their modeling.

1. Normal Forces

The normal forces N_j on the tyres are determined through a dynamic force balance on the tractor-implement system. After considering that the normal forces vary with slip angle α, corrected normal forces N^*_j were determined using experimental data relating lateral force, slip angle and normal force supplied by Schwanghart[7].

For the tractor-trailed implement system TTIS, the forces are determined to be ;

$$N_1=\left[\frac{l_4}{2l_1}-\frac{h_1}{2l_1}\tan\varphi\left(\cos\psi-\frac{2l_4}{l_2}\sin\psi\right)\right]Mg\cos\varphi-\frac{h_2}{2l_1}P_i-\frac{l_5}{2l_1}F_h \tag{1}$$

$$N_2=\left[\frac{l_4}{2l_1}-\frac{h_1}{2l_1}\tan\varphi\left(\cos\psi+\frac{2l_4}{l_2}\sin\psi\right)\right]Mg\cos\varphi-\frac{h_2}{2l_1}P_i-\frac{l_5}{2l_1}F_h \tag{2}$$

$$N_3=\left[\frac{l_1-l_4}{2l_1}+\frac{h_1}{l_1}\tan\varphi\left(\frac{\cos\psi}{2}-\frac{l_1-l_4}{l_3}\sin\psi\right)\right]Mg\cos\varphi+\frac{h_2}{2l_1}P_i+\frac{l_1+l_5}{l_1}F_h \tag{3}$$

$$N_4=\left[\frac{l_1-l_4}{2l_1}+\frac{h_1}{l_1}\tan\varphi\left(\frac{\cos\psi}{2}+\frac{l_1-l_4}{l_3}\sin\psi\right)\right]Mg\cos\varphi+\frac{h_2}{2l_1}P_i+\frac{l_1+l_5}{l_1}F_h \tag{4}$$

where,

$$P_i=T_i+mg\sin\varphi\cos(\psi+\theta) \tag{5}$$

$$F_h=\frac{l_9}{(l_8+l_9)}mg\cos\varphi \tag{6}$$

$$N_i=N_5+N_6=\left(\frac{l_9}{(l_8+l_9)}+1\right)mg\cos\varphi \tag{7}$$

For the tractor-mounted implement system TMIS, they are ;

$$N_1=\left[\frac{l_4}{2l_1}-\frac{h_1}{2l_1}\tan\varphi\left(\cos\psi-\frac{2l_4}{l_2}\sin\psi\right)\right]Mg\cos\varphi-\frac{l_5}{2l_1}mg\cos\varphi \tag{8}$$

$$N_2=\left[\frac{l_4}{2l_1}-\frac{h_1}{2l_1}\tan\varphi\left(\cos\psi+\frac{2l_4}{l_2}\sin\psi\right)\right]Mg\cos\varphi-\frac{l_5}{2l_1}mg\cos\varphi \tag{9}$$

$$N_3=\left[\frac{l_1-l_4}{2l_1}+\frac{h_1}{l_1}\tan\varphi\left(\frac{\cos\psi}{2}-\frac{l_1-l_4}{l_3}\sin\psi\right)\right]Mg\cos\varphi+\frac{l_1-l_4}{2l_1}mg\cos\varphi \tag{10}$$

$$N_4=\left[\frac{l_1-l_4}{2l_1}+\frac{h_1}{l_1}\tan\varphi\left(\frac{\cos\psi}{2}+\frac{l_1-l_4}{l_3}\sin\psi\right)\right]Mg\cos\varphi+\frac{l_1-l_4}{2l_1}mg\cos\varphi \tag{11}$$

$$N^*_j=(1-e^{-ks})N_j \tag{12}$$

where, $j=1, 2, \cdots, 6$

$$k_s=E+F\alpha+G\alpha^2 \tag{13}$$

where, E, F and G are experimentally determined constants[8].

2. Lateral forces

The relation between lateral forces acting on a tyre and the resulting slip is highly non-linear. In the study reported here, two tyres whose characteristics were determined experimentally by Schwanghart[9] were used. The slip angle-cornering force coefficient relation of these tyres is shown in Fig. 1 and Fig. 2. Terra tyre 38×20−16 which has a peak cornering force coefficient of 0.8 was used as tractor rear tyres and "651" tyre 12.5/80−18 with a peak cornering coefficient of 0.7 was used as tractor front and implement tyres. These results were obtained from measurements on asphalt. As is evident from the two

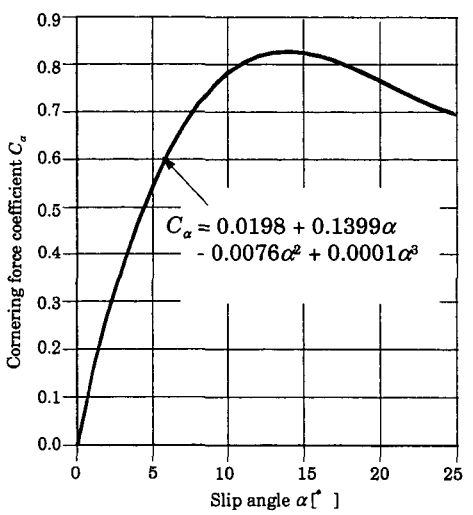

Fig. 1. Cornering characteristics of Terra tyre[3]

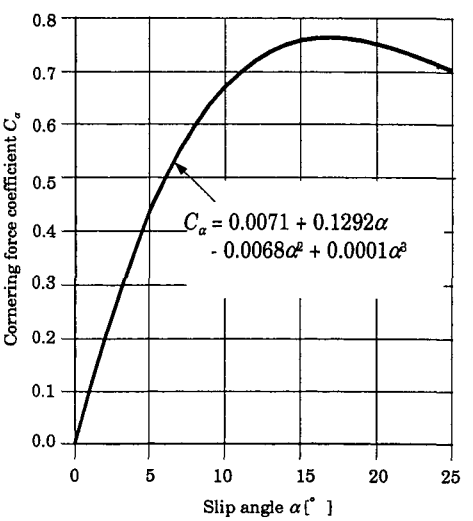

Fig. 2. Cornering characteristics of 651 tyre[3]

graphs, the relation between cornering force coefficient and slip angle is described by the following third order polynomial with constant coefficients that is :

$$C_\alpha = A + B\alpha + C\alpha^2 + D\alpha^3 \tag{14}$$

where,

C_α- cornering force coefficient

α- slip angle

A, B, C and D are constants determined experimentally.

The lateral force is usually modeled as a function of slip angle and cornering coefficient. Cornering force coefficient is a function of slip angle of the tyre. In the study of highway vehicles, cornering force coefficientis usually taken to be constantion in order to linearise the resulting equations of motion. In case of the agricultural tractors, however, especially when considering motions on a slope, a constant cornering stiffness can not be used due to the fact that the normal load and slip angles change with different terrain conditions. For this reason, throughout the simulations lateral force was modeled as a function of cornering force coefficient and normal force.

Finally, lateral force is calculated from equation (15).

$$L_i = -C_\alpha N^*_j \tag{15}$$

$$\alpha_f = \frac{v_y + (l_1 - l_4)\omega_z}{v_x} - \delta \tag{16}$$

$$\alpha_r = \frac{v_y - l_4\omega_z}{v_x} \tag{17}$$

$$\alpha_o = \frac{v_y}{v_x} \tag{18}$$

$$\alpha_i = \frac{v_y + (l_4 + l_5 - l_8)\omega_z - l_8\omega_{zi} - v_x\theta - l_9(\omega_z - \omega_{zi})}{v_x\cos\varphi - (v_y - (l_4 + l_5)\omega_z)\sin\theta} \tag{19}$$

$$\alpha_{oi} = \frac{v_y + (l_4 + l_5 - l_8)\omega_z - l_8\omega_{zi} - v_x\theta}{v_x\cos\varphi - (v_y - (l_4 + l_5)\omega_z)\sin\theta} \tag{20}$$

Description of Tractor-implement model

1. Tractor-trailed implement combination (TTIC)

Figure 3 shows a photograph of a tractor-trailed implement combination (e. g. hay baler or manure spreader) transversing a slope and Fig. 4 is its free-body diagramme. As pointed out in the preceeding chapter the lateral motion of a tractor is guided by 3 degrees of freedom. It is against this background that the present model is represented by 4 degrees of freedom ; longitudinal motion, lateral motion, tractor yaw motion of the tractor centre of gravity and implement relative swing about the hitch point H. The four degrees of freedom are re-

presented respectively by the vehicle coordinate system. O is the centre of gravity of the tractor while O_1 is the centre of gravity of the implement. The tyres are numbered 1, 2, ⋯, 6, from tractor front right to implement left respectively. L_j are respective lateral forces on each of the tyres and T_j are the corresponding longitudinal forces. Conducting the equilibrium of forces and moment on the tractor and implements separately, we obtain for the tractor ;

$$M\ddot{x}=T_r-Mg\sin\varphi\cos\psi-T_f\cos\delta-L_f\sin\delta-P_i \tag{21}$$

$$M\ddot{y}=L_r+Mg\sin\varphi\sin\psi+L_f\cos\delta-T_f\sin\delta \tag{22}$$

$$I_{zz}\ddot{\psi}=-l_4L_r-(l_1-l_4)T_f\sin\delta+(l_1-l_4)L_f\cos\delta \tag{23}$$

where,

$$\ddot{x}=\dot{v}_x-v_y\omega_z,\qquad \ddot{y}=\dot{v}_y+v_x\omega_z,\qquad and\qquad \ddot{\psi}=\dot{\omega}_z$$

and for the implement ;

$$m\ddot{x}_i=P_i\sin\theta-T_i-mg\sin\varphi\cos(\psi+\theta) \tag{24}$$

$$m\ddot{y}_i=P_i\cos\theta+L_i+mg\sin\varphi\sin(\psi+\theta) \tag{25}$$

$$I_{zzm}\ddot{\psi}_i=-l_8P'_y\cos\theta+\frac{l_{10}}{2}(-T_6+T_5)-l_9L_i \tag{26}$$

where,

$$\ddot{x}_i=\dot{v}_{zi}-v_{yi}\omega_{zi},\qquad \ddot{y}_i=\dot{v}_{yi}+v_{xi}\omega_{zi},\qquad and\qquad \ddot{\psi}_i=\dot{\omega}_z+\dot{\omega}_{zi}$$

After elimination of hitch forces, necessary substitutions and rearrangements the following four equations representing each of the degrees of freedom are obtained.

$$(M+m)\dot{v}_x=-Mg\sin\varphi\cos\psi-mg\sin\varphi\cos(\psi+\theta)+T_r-T_m-T_f\cos\delta-L_f\sin\delta \tag{27}$$

Fig. 3. Photograph of a tractor-trailed implement combination

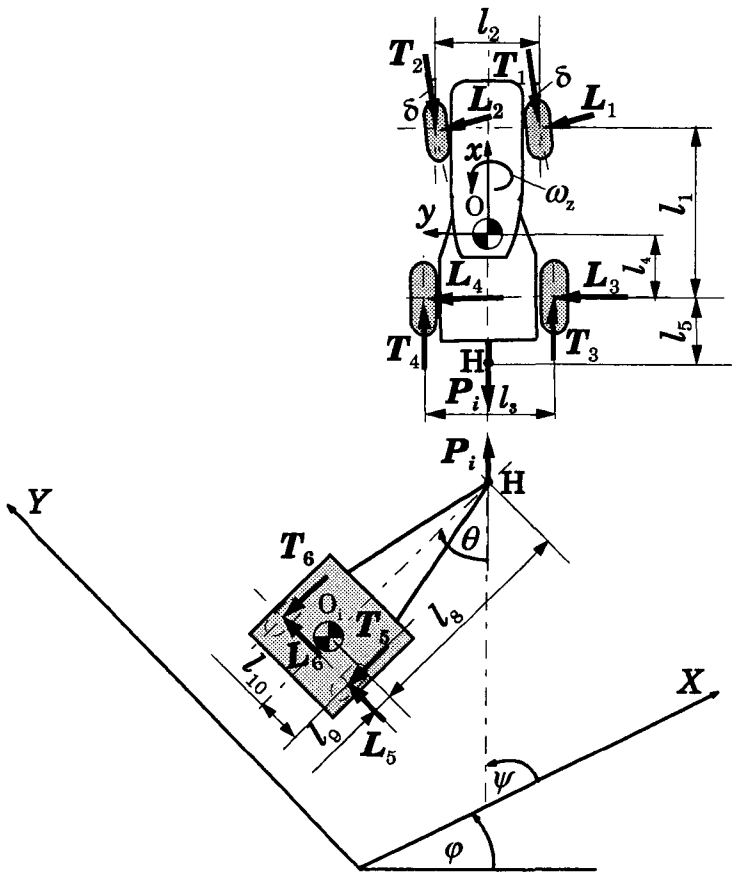

Fig. 4. Dynamic model of a tractor-trailed implement combination

$$M(\dot{v}_y+v_x\omega_z)+m(\dot{v}_{yi}+v_x(\omega_z+\omega_{zi}))=Mg\sin\varphi\sin\psi+mg\sin\varphi\sin(\psi+\theta)$$
$$+L_r+L_m+L_f\cos\delta-T_f\sin\delta \tag{28}$$

$$I_{zz}\dot{\omega}_z+(l_4+l_5)m(\dot{v}_{yi}+v_x(\omega_z+\omega_{zi}))=-l_4L_r-(l_1-l_4)T_f\sin\delta+(l_1-l_4)L_f\cos\delta$$
$$+(l_4+l_5)mg\sin\varphi\sin(\varphi+\theta) \tag{29}$$

$$I_{zzm}(\dot{\omega}_z+\dot{\omega}_{zi})+l_8m(\dot{v}_{yi}+v_x(\omega_z+\omega_{zi})-v_x\dot{\theta})=\frac{l_{10}}{2}(-T_6+T_5)-l_9L_m \tag{30}$$

$$v_{yi}=v_y\cos\theta+((l_4+l_5-l_8)\omega_z)\cos\theta-l_8\omega_{zi}-v_x\sin\theta \tag{31}$$

$$v_{yi}=v_x\cos\theta-(v_y-(l_4+l_5)\omega_z)\sin\theta \tag{32}$$

2. Tractor-mounted implement combination (TMIC)

Figure 5 shows a photograph of a tractor-implement combination (e. g. a tractor with a fertilizer distributor or with a sprayer) while Fig. 6 is its free-body diagramme. Points O and O_1 are the centres of gravity of the tractor and implement respectively. The model has three degrees of freedom : longitudinal, lateral, and yaw motions. Other symbols are the same as for the TTIC described above. Summing forces along directions and moment about the tractor's centre of gravity, the following differential equations are obtained.

$$(M+m)(\dot{v}_x - v_y\omega_z) = T_r - (M+m)g\sin\varphi\cos\psi - T_f\cos\delta - L_f\sin\delta \tag{33}$$

$$(M+m)(\dot{v}_y - v_x\omega_z) = L_r + (M+m)g\sin\varphi\sin\psi - T_f\sin\delta + L_f\cos\delta \tag{34}$$

$$(I_{zz} + (l_4+l_5)^2 m)\dot{\omega}_z = -l_4 L_r + (l_1 - l_4)L_f\cos\delta - (l_1 - l_4)T_f\sin\delta \tag{35}$$

All the symbols are as defined for the case of tractor-trailed implement system and shown in Fig. 6 below.

Stability Criteria

A major interest in tractor dynamics is to determine its stability for a given condition, particularly the stability against overturning on sloping agricultural fields. The stability of a tractor assumes that a tractor will follow a set path and change paths under the operator's control. Schwangart[10] estimates the following values of operating limits of different machinery for different crops ; sugar beet 7°, potatoes 11°, cereals 14°, forage 1.7° and grazing 24°. These limits depend on the machinery used and relate only to traction limits for pulling harvesting equipment. There is a wide variation between the stability limits of different types and designs of machine. The 2WD or 4WD tractor will tip at a side slope of 36° extending the track with by 210 mm can increase this value to 42°. Trailed machinery are generally less stable than the tractor, with most stability in the range 20° to 30°.

In Czechoslovakia[11], tractors working on slopes were to be marked with a label indicating the rated operating slope ROS which has been determined as 1/3 of the minimum static stability in degrees. This resulted in to problems because research results revealed that ROS is a function of velocity and should be determined by finding the smallest value of slope for a given speed by different criteria on conditions that either the resistance to overturning or the resistance to sliding reach the defined limit. Given a particular slope angle, the minimum velocity at which a tractor would overturn has been determined by Kelly and Rehkugler, 1980[12]. They used an interactive section search method (Golden section search method). The method can not be applied to general field conditions since it establishes velocity conditions for a particular slope at a given time.

Recognizing the deficiencies of these past efforts a new procedure is been

Fig. 5. Photograph of a tractor-mounted implement combination

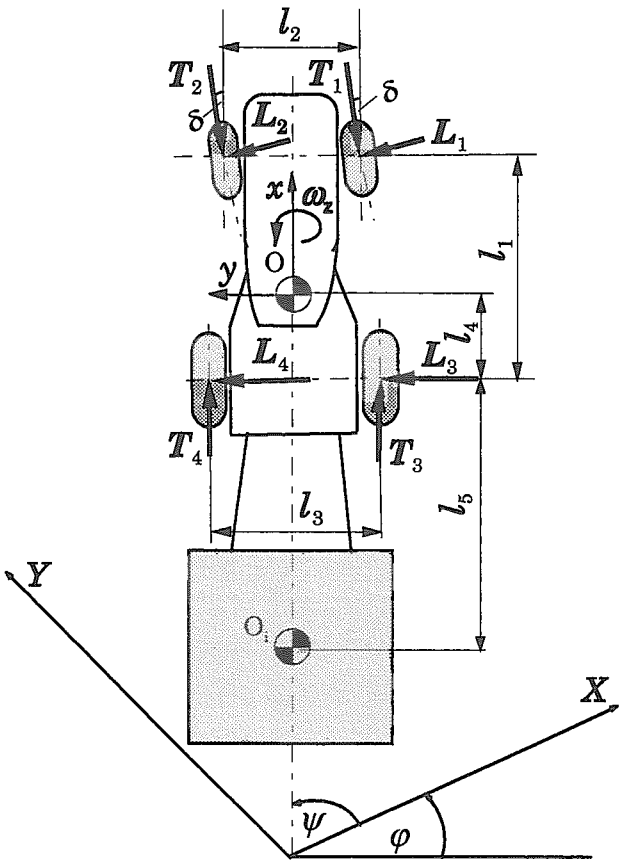

Fig. 6. Dynamic model of a tractor-mounted implement combination

proposed. In order to determine a safe operating area three criteria were applied simultaneously. The first and most important has to do with sideslip. It is concerned with the determination of the slope angle φ and heading angle ψ combination at which uncontrollable lateral slip will occur, Fig. 7. At this point there is a sudden build up of slip and loss of lateral force so that it becomes impossible to control the tractor. The above algorithm can be stated as : determine φ and ψ for which equation (36) is satisfied subject to equation (37).

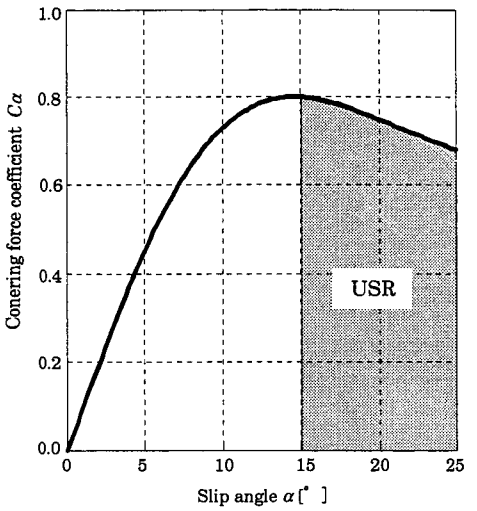

Fig. 7. Uncontrollable slip region

$$\alpha_{L\max}=\min(\alpha) \tag{36}$$

$$L(\alpha)>L(\alpha+\Delta\alpha) \tag{37}$$

where,

$\alpha_{L\max}$- the smallest slip angle giving maximum lateral force

$\Delta\alpha$- infinitesimal change in slip angle

The second criterium finds conditions under which partial stability and/or total stability limit are reached. Partial stability limit is the point at which the load on any of the tyres becomes zero while total stability limit is the point at which the load on two tyres become zero. The third criterium is a modification of the second in that it determines the point at which the percentage of the total load on the front or one side of the tractor will be less than 20% of the total mass of the tractor-implement combination. The 20% is the amount of load required by European, Japanese and other regulations for small tractors at any point in time during operation. For medium tractors the value is 19% and for large ones 18%[13]. The above criteria be represented by the following mathematical relations, equations (38) to (40).

$$\frac{N_1+N_2}{\sum_{j=1}^{4}N_j+N_i}\leq 0.20 \tag{38}$$

$$\frac{N_1+N_3}{\sum_{j=1}^{4}N_j+N_i}\leq 0.20 \tag{39}$$

$$\frac{N_2+N_4}{\sum_{j=1}^{4}N_j+N_i}\leq 0.20 \tag{40}$$

Simulation

The mathematical models developed above were translated in to C programme and a number of simulations were conducted. The programme performs integration of the differential equations using a fourth order Runge-Kutta-Gill method (RKGM). Since most field operations are conducted at constant velocities, a constant value of 0.5 m/s was used throughout the simulations. Tractor and tyre parameters needed for the simulations were either determined or adopted from literature as shown in Table 1.

Table 1. Major tractor and implement dimensions used in the simulations

Parameter	Value [m]	Parameter	Value [m]
l_1	1.385	$b_1 = b_2$	0.328
l_2	0.940	$b_3 = b_4$	0.328
l_3	0.960	$d_1 = d_2$	0.965
l_4	0.680	$d_3 = d_4$	0.987
l_5	0.385	$r_1 = r_2$	0.468
l_6	0.960	$r_3 = r_4$	0.468
l_7	0.685	$z_1 = z_2$	0.4787
l_8	0.500	$z_3 = z_4$	0.4787
l_9	0.500	M	826.7[kg]
l_{10}	0.600	m	621.4 [kg]
h_1	0.495	I_{zz}	353.0 [kgm^2]
h_2	0.350	I_{zz1}	587.0 [kgm^2]

Results and Discussions

1. Tractor-trailed implement

Figure 8 shows the stability limits for a TTIC. The line marked SSL shows the slip stability limit. This means that tractor operation any where above this curve will cause lost of stability as a result of development of excessive slippage facilitating lost of lateral force, uncontrollable eventually slip sets in. Operation below the curve will not lead to stability lost as a result of slip. The curve itself is the stability boundary. GSL and OSL represents general and overturning stability limits respectively. Operation above any of the

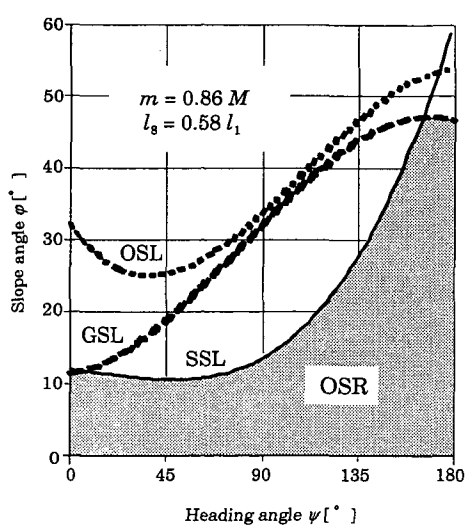

Fig. 8. Stability regions for a tractor-trailed implement combination

curves will result in stability failure. The region marked OSR, overall stability region is the safe operating region. Operation within this region is most safe. There is no danger of stability loss due to any of the criteria. Heading angles ψ between 0° and 90° are characterized with small safe operating region, with maximum slope angle φ of about 14°. It is worth noting that stability limitations have resulted due to reaching SSL.

This result represents a set of TTIC parameters only. The area of the region is expected to change with variations in these parameters. This expectation is confirmed by the results presented in Fig. 9 and Fig. 10. In Fig. 9, optimum design parameter region ODPR shows that to achieve maximum slope stability, the distance between hitch point H and the implement centre of gravity O_I, l_8, should be about 50 to 82% of tractor wheelbase l_1. To obtain these results the three stability discussed earlier were applied simultaneously. The trend shown here is expected to continue even for higher values of implement mass. As the mass becomes larger, safe operating slope becomes smaller. Figure 10 shows optimum combinations of and which will give the best slope stability. The area marked ODPR shows optimum and combinations. For instance, if l_8 is 90% of the wheelbase l_1 and l_9 is -21% of wheelbase l_1, the combination will be stable even at a slope of 16°. A minus l_9 means that the implement axle is in front of its centre of gravity. The result shows that while designing a trailed implementin order to achieve better stability on slope, its axle should be in front of its centre of gravity.

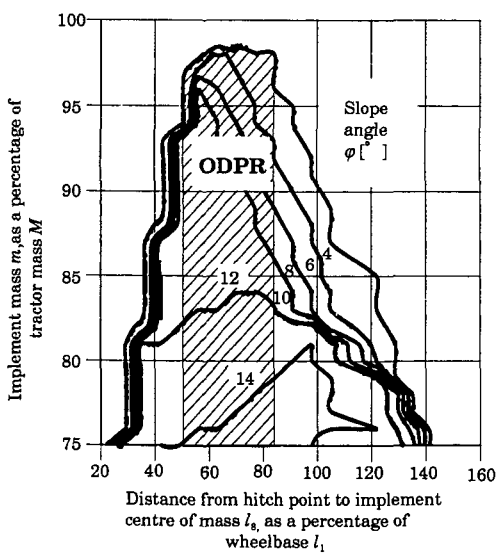

Fig. 9. Optimum implement design parameter l_8 as affected by expected payload

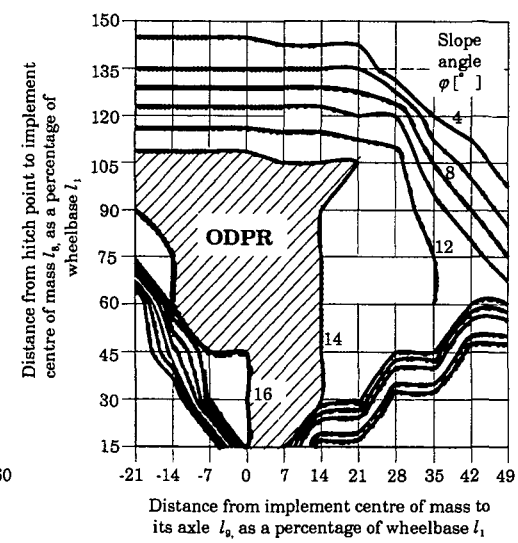

Fig. 10. Optimum implement design parameter l_8 as affected by expected payload

2. Tractor-mounted implement

A comparison of Fig. 11 with Fig. 12 shows that with a TMIC, an increase of 100% in the implement mass causes a remarkable change in the overall stability region OSR. The OSR for a TMIC with implement mass 12% of tractor mass has a critical slope angle φ of 22° which is as a result of reaching SSL. For a TMIC with implement mass 24% of tractor mass, the critical slope is about 8°. GSL takes on a greater importance as a result of longitudinal load transfer to the rear wheels. There is also a decrease in critical slope angle of SSL which is believed to have occurred due to a drastic reduction in the load on front axle which eventually causes reduced lateral forces.

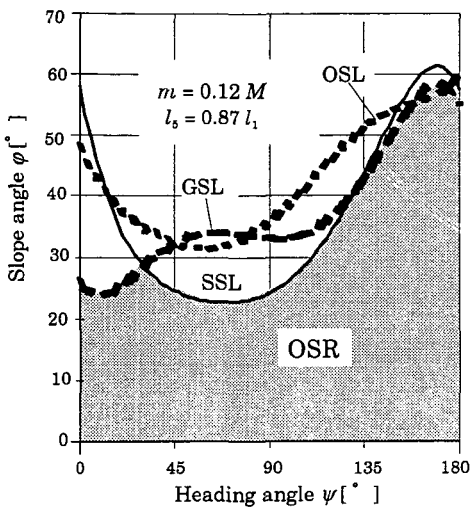

Fig. 11. Stability regions for a tractor-mounted implement combination, $m=0.12M$

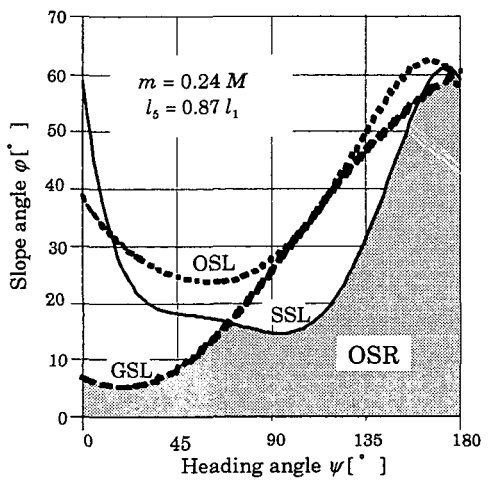

Fig. 12. Stability regions for a tractor-mounted implement combination, $m=0.24M$

Fig. 13 shows how stability region changes with m and l_5. During operation of a tractor with a fertilizer spreader or a sprayer, the total mass of the system decreases as spreading or spraying progresses, this would result in improvements in the stability characteristics. While operating on a side slope, operation should be started at low slope areas and should continue gradually to steeper areas as the tank is emptied. Furthermore, the tanks should be designed in a manner which allows movement of implement centre of gravity forward as emptying continues. With such a design, the combination will be more stable than if the tank were otherwise designed. This graph should be used as a guide to operators. If m is kept constant and l_5 is decreased, safe operating slope is increased as a result of load transfer. With a constant l_5, an increase in m reduces safe operating slope.

Finally, in Fig. 14 the effect of implement mass on steerability is presented.

It shows that the implement mass should not be more than 21% of the tractor mass if steering control is to be achieved. When implement mass is more than 21% of the tractor mass, as stated earlier, there is a considerable reduction in the load on the front-steerable axle. With an increase in slope angle, the difficulty in steering becomes more severe.

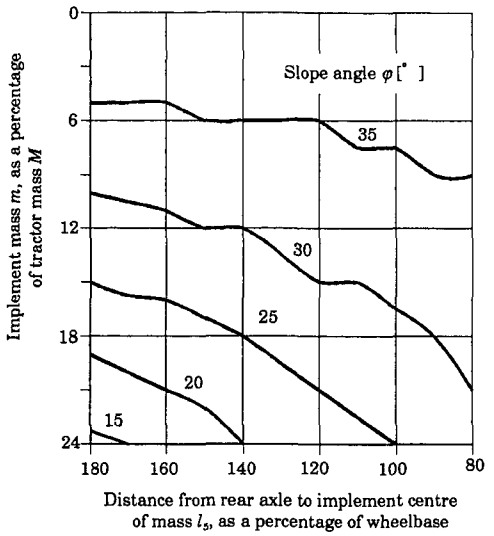

Fig. 13. Effect of m and l_5 on the stability of a tractor-mounted implements

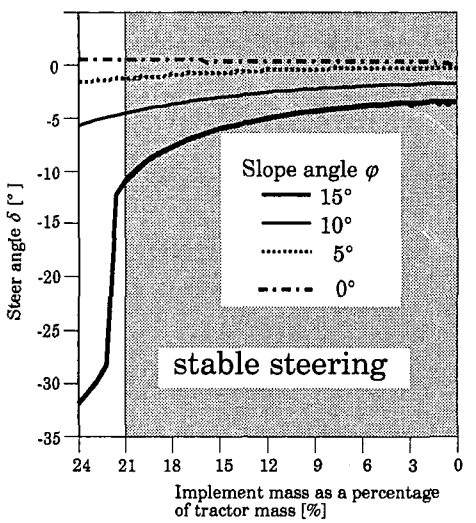

Fig. 14. Steerability of tractor-mounted implement combination

Conclusions

Computer simulation of tractor-implement combinations have been conducted for the purpose of establishing their stability regions and determination of design parameters which will maximize this safe region. From the results the following conclusions could be drawn :

1) A procedure has been developed to determine safe operating region of TICs. The procedure is based on three criteria : (a) sideslip criteria which establishes the conditions under which uncontrollable slip occurs, (b) general stability criteria which determines conditions during which the total load on the front axle or on one side of the tractor will be less than 20% of the total mass of the tractor plus implement and (c) partial stability, load on one wheel is zero, and total stability limit, load on at two wheels is zero.

2) Simultaneous application of the above criteria enables the determination of the implement design parameters which give optimum stability characteristics. To achieve a good slope performance of a tractor-trailed implement combination it is desirable to have the implement axle in front of its centre of gravity.

3) To achieve maximum slope stability, the distance between the hitch point and the implement centre of gravity O_i, should be about 50 to 82% of tractor wheelbase.

4) During operation of a tractor with a fertilizer spreader or a sprayer, the total mass of the system decreases as spreading or spraying progresses, this would result in improvements in the stability characteristics. While operating on a side slope, operation should be started at low slope areas and should continue gradually to steeper areas as the tank is emptied.

5) Steerability of tractor-mounted implement is strongly affected by the implement to the extend that implements of mass over 21% mass of tractor causes unbearable steering difficulty which could lead to loss of stability.

Although the results presented above were got purely from simulations, there is complete agreement with earlier studies which classify slopes of 15° as steep slopes. These results will, however, require some sort of experimental validation before they could be put to practical utilization. Further application of the stability procedure could be extended to two axle trailed implements and soil engaging implements of all kinds.

A procedure based on three criteria was developed to predict safe operating regions and determine design parameters which will maximized these regions. The three criteria are : sideslip criteria which determines heading angle and slope angle combination which will force uncontrollable slip to set in, zero normal force on any of the tractor tyres, or two of tractor tyres is tagged, overturning criteria, a situation where less than 20% of the total mass of the tractor-implement system will not be available on the front or one side of the tractor is the "general criteria". Simultaneous application of the criteria enables the determination of implement design parameters which give optimum stability characteristics.

References

1) Yisa M. G. and Terao H. : Dynamics of Tractor-implement Combinations on Slopes (Part I), State-of-the-art Review, Journal of the Faculty of Agriculture, Hokkaido University, Vol. **66**, Pt. 2, 240−262, 1995

2) Yisa M. G., Terao H. and Kubota M. : Dynamics of Tractor-implement Combinations on Slopes (Part II), Computer Simulation of Directional Dynamics, Journal of the Faculty of Agriculture, Hokkaido University, Vol. **66**, Pt. 2, 263−275, 1995

3) Schwanghart H. : Measurement of Forces on Steered Non-driven Wheels, Proceedings of the 7th International Conference (ISTVS) Aug. 16−20, Vol. **I**, 335−356, Calgary, 1981

4) Schwanghart H. : Tractor Overturning and Testing of Safety Devices Against Overturning. Landtechnik Forschung. **19**(1) : 1−5, 1971. (Translated by E. Harris).

5) Masemore, B. J. : Influence of Tractor Geometry and Mass on Side Overturns. M. S. Thesis, Cornell University, Ithaca, New York 14853, 1979.

6) Gilfillan, G. : Polar Diagram Representation of Tractor Stability and Control on Slope. Scottish Inst. of Agricultural Engineering, Technical Report No. 1. SIAE, Bush Estate, Penicuik, Midlothial EH26 OPH, 1978.

7) Schwanghart H. : Tractor Overturning and Testing of Safety Devices Against Overturning. Landtechnik Forschung. **19**(1) : 1−5, 1971. (Translated by E. Harris).
8) Schwanghart H. : Tractor Overturning and Testing of Safety Devices Against Overturning. Landtechnik Forschung. **19**(1) : 1−5, 1971. (Translated by E. Harris).
9) Schwanghart H. : Tractor Overturning and Testing of Safety Devices Against Overturning. Landtechnik Forschung. **19**(1) : 1−5, 1971. (Translated by E. Harris).
10) Schwanghart H. : Tractor Overturning and Testing of Safety Devices Against Overturning. Landtechnik Forschung. **19**(1) : 1−5, 1971. (Translated by E. Harris).
11) Grecenko A. : Operation on Steep Slopes. State-of-the-Art Report. Journal of Terramechanics **21**(2) : 181−194, 1984.
12) Kelly J. E. and Rehkugler G. E. : Stability Criteria for Tractor Operation on Side Slopes. ASAE Special Publication, "Engineering A Safer Food Machine" 145−157, 1980
13) Habarta F. : Determination in Relation to Safety of Operation of the Minimal Load on the Front Steering Axle of a Tractor with Implements Attached, Journal of Agricultural Engineering Research **16**(2) : 126−140, 1971.