EFFECTS OF DRYING CONDITIONS IN MULTI-STAGE DRYING ON QUALITIES OF WHEAT AND BARLEY

Yoshinori IKEUCHI, Kazuhiko ITOH and Juzo MATSUDA

(Department of Agricultural Engineering, Faculty of Agriculture, Hokkaido University, Sapporo, Japan)

Received December 26, 1977

Introduction

Commercial drying of grain is usually performed in beds 30-45 cm deep or in continuous flow driers. The effect of multi-stage drying in corn and grain was reported by FOSTER[3] (1950) and OXLEY[11] (1940), respectively. Studies made by authors[6,7,8] (1974) show that by using intermittent drying involving an adequate resting period referred to as tempering, rice with a high moisture content of over 25% can be dried at a fast drying rate to 15% without any damage of the rice kernels.

Numerous investigations on the basic physical principles of the artificial drying process in wheat have been made in U. S. A. and England, especially, a very valuable analysis of the mechanism of drying exposed kernels of wheat was published by SIMMONDS etc.[13,14,15] (1953-1954) and BECKER[1,2] (1955). HARRIS[5] (1952), RAMSER[12] (1954) and MUNTONA[10] (1952) reported on the relation of drying conditions to the properties of wheat. THOMAS[16] (1962), WOODFORDE[20] (1961) and WARNER[18,19] (1962) conducted an investigation on drying of wheat in beds one or two feet deep to obtain design data and to find the operating conditions requisite for the practical performance of commercial farm grain driers. The Crop Dryer Manufacturers ASSN (1956) recommended the maximum safe temperature of drying air, but they did not refer to temperature of material. Any previous work described above has not been done on the effects of multistage drying on quality of wheat and barley.

Following the introduction of grain combines into Japan, basic data on drying combine-harvested wheat and barley has been in demand by farmers and dryer manufacturers, but, at present only a few studies[17] (1967) on artificial drying of grain, excluding rough rice, have been carried out in Japan. Thus, it becomes important to establish optimal adequate drying conditions

which can be expected to dry the grain without objectionable quality deterioration during the drying process.

The work described was carried out to obtain design data and to provide optimal operating conditions for the multi-stage driers using barley and wheat which are grown and combine-harvested at actual farm sites in Hokkaido. This work itself was carried out during 1967–1968 at the Agricultural Process Engineering Laboratory, Hokkaido University, with experiments on the drying of barley and wheat in a self-made drying apparatus. Also included in this work were determination of grain qualities such as germination capaity, gluten content and glassy kernel ratio, and determination of flour qualities by using the Brabender testing system.

Apparatus

The apparatus used for the present experimental work is shown in Fig. 1. It is a circulating air duct system which mainly consists of 7.5 hp. centrifugal fan ① and stainless-steel duct system provided for leading heated air from the fan to the drying chamber ⑥, from which air returns to the fan inlet, passing through an indirect heating unit ② (steam radiator) and humidifing unit ③. Airflow rate and air temperature can be adjusted, to some extent, by means of suction ⑦ and delivery damper ⑧, operated by the automatic control system (5 S/W 5027 type produced by Fuji Electric Machine Manufacturing Co.).

The material container shown in Fig. 2 is installed in the drying chamber (Fig. 1 ⑥). The material to be dried is placed in the top of the grain boxes

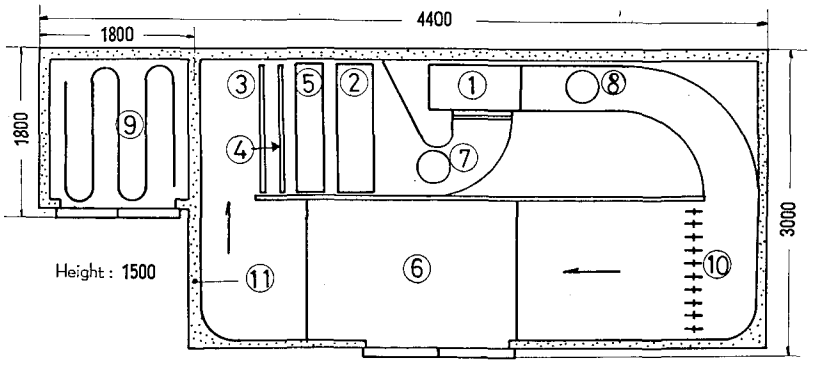

① Fan ② Heating Unit ③ Humidfing Unit ④ Steam Injector ⑤ Cooling Unit ⑥ Duct System ⑦ Suction Damper ⑧ Delivery Damper ⑨ Storage Chamber ⑩ Streightening Vane ⑪ Thermal Insulator

Fig. 1. Laboratory drying apparatus.

① mounted on a plenum chamber ② and the material can be carried into the outside tempering tank at the end of the drying period. Each box is consructed of stainless steel and has a metal screen floor on which the grain rests. Air is supplied to the plenum chamber passing through duct system following the arrow mark. The airflow is adjusted in duplicate by means of the valve ④ on the inlet side of the plenum chamber and the other valve ⑧ on the bypass duct. A hot wire probe for measuring air volume rates was inserted into the inlet and outlet wall of the plenum chamber.

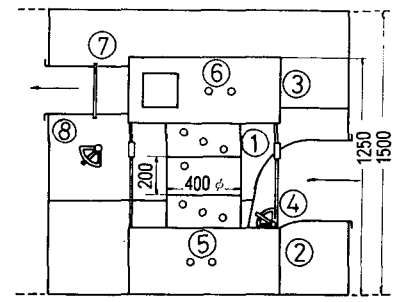

① Sample Boxes ② Plenum Chamber ③ Outlet Air Chamber ④ Inlet Valve ⑤, ⑥ Holes for Hot wire Probe ⑦ Outlet Damper ⑧ Bypass Damper

Fig. 2. Details of the dryer.

The wet and dry-bulb temperature of the air entering the bottom of the grain bed is measured by means of a ventilated thermometer unit mounted inside the plenum chamber ⑤ and also inside the outlet chamber ⑥ which collects the exhaust air. Air and grain temperatures at any given point of the drying system were measured by an automatic-balance temperature compensated recording potentiometer with copper-constantan thermocouples.

The design of the apparatus is such that different arrangements of test boxes and continuous flow type dryers can be used.

All grain moisture content determinations were carried out by a 105°C, single stage, 24-h oven method and are expressed in percent of wet basis.

Materials

1. Barley

The barley employed for the test was of the 'Syunsei' variety harvested by a grain combine at Kiyosato-Cho, Shari-County, Hokkaido, on August 13, 1967. The barley was transported to our laboratory and stored in the refrigerated chamber held at a temperature of 1°C, from which testing grain samples were taken as required and used for the experimental work (Table 1).

TABLE 1. Initial properties of barley

Variely	Bulk density (g/l)	Particle weight, (g/1000)	Moisture content, (% w. b.)	Germination capacity, (%)
Syunsei	652.3	48.5	19.8	99

2. Wheat

The winter wheat, 'Hokuei' variety, grown at Kiyosato-Cho in 1967 was used for this test in a similar manner to barley, mentioned above. The initial properties of tested wheat are shown in Table 2.

TABLE 2. Initial properties of wheat

Variety	Bulk density, (g/l)	Particle weight, (g/1000)	Moisture content, (%/w. b.)	Germination capacity, (%)	Gluten content, (%)	Glassy kernel rate, (%)
Hokuei	731.2	43.8	20.0	97	31.8	39.9

Test procedure

1. Barley

The drying tests with beds of grain 10 cm deep were carried out at air temperatures of 50, 60, 70, 80°C and airflow vloume rates of 1, 2, 3 m^3/sec per ton. It was shown that an initial weight of grain of 7.5 kg would produce a bed depth of approximately 10 cm and this weight of stored barley was employed for each of 15 tests of the series.

Between each drying period of 10, 20, 30 and 60 minutes for 1 pass, barley grains were tempered for 3 hours constant in a tempering tank at room temperature. The drying and tempering treatment were repeated until the initial moisture content of 19.8% was reduced to about 13.5%. At each start and end of the drying period, grain samples were taken from the middle of the bed for determination of moisture content, from which the rate of drying, namely reduction of moisture content per 1 hour, was calculated.

Germination tests were carried out according to the conventional method, with 4 replicates, each 100 seeds, on samples taken from the initially stored grain before drying and the dried grain after the completion of the drying tests.

2. Wheat

The experimental procedure for drying tests for wheat was similar to that used for barley, with the exception that airflows of 2, 3, 4 m^3/sec per ton were chosen instead of 1, 2, 3 m^3/sec per ton and germination tests were carried out with 3 replicates instead of 4 replicates.

After drying tests, however, determination of gluten content and rate of glassy kernel for dried wheat samples were carried out to evaluate the thermal effects of drying. In addition, Brabender tests, which are considered

as highly important for the evaluation of the secondary processing quality of wheat, were carried out in this work.

(1) **Gluten content**

Since protein has been recognized in Japan as an important factor in determining bread-baking performance of wheat, wet gluten of the grain was determined by the hand washing method for each drying-tested wheat. 100 g of flour obtained from wheat samples milled on an experimental test mill and sieved through a 60 mesh sieve, were used for determining gluten content.

(2) **Glassy kernel rate**

Wheat grains were cut with a seed-cutter to observe the kernel structure of the cross section. Grains having glassy structure in the cross section are regarded to have a higher gluten content than grains having a starchy structure. Glassy kernel rate was calculated from glassy grain counts with 3 replicates of 100 seeds.

(3) **Brabender tests**

Farinograph, extensograph and amylograph tests were performed according to the normal method published in the manufacturer's operating manual.

Results and discussion

1. Barley

The relationships between rate of drying, drying period, drying air temperature and airflow volume rate were shown in Fig. 3.

From these diagrams, it is found that the rate of drying increases with the increase of air temperature and airflow rate and shortening of drying period. Especially, shortening of drying period was clearly shown to increase the drying rate as compared with other drying factors as far as this experiment concerned. For example, in Fig. 3-(a), the rate of drying at an air temperature of 60°C, an airflow rate of 1 m^3/sec per ton and a drying time of 60 minutes per 1 pass, shows a moisture reduction of 4.4%/h, whereas, the rate of drying under the same conditions with the time changed to a 10 minute drying per 1 pass shows a moisture reduction of 7.7%/h. Even though the air temperature was raised from 60°C to 70°C under the same drying conditions, the rate of drying shows no significant increase with a mere reduction of 5%/h.

The results of germination tests are shown in Fig. 4. These diagrams show the relations of drying air temperature, airflow rate and drying time

per 1 pass to the germination capacity of barley, together with the maximum grain temperature curves during the all-over drying process. It is recognized that germination capacity decreases gradually with the increase of drying time per 1 pass at each airflow rate and drying air temperature. Also, the maximum grain temperature increases with increase of drying time per 1 pass. At a drying air temperature of 50°C (Fig. 4-(a)) an airflow rate of 3 m^3/sec per ton with a drying time of 60 minutes, the maximum grain

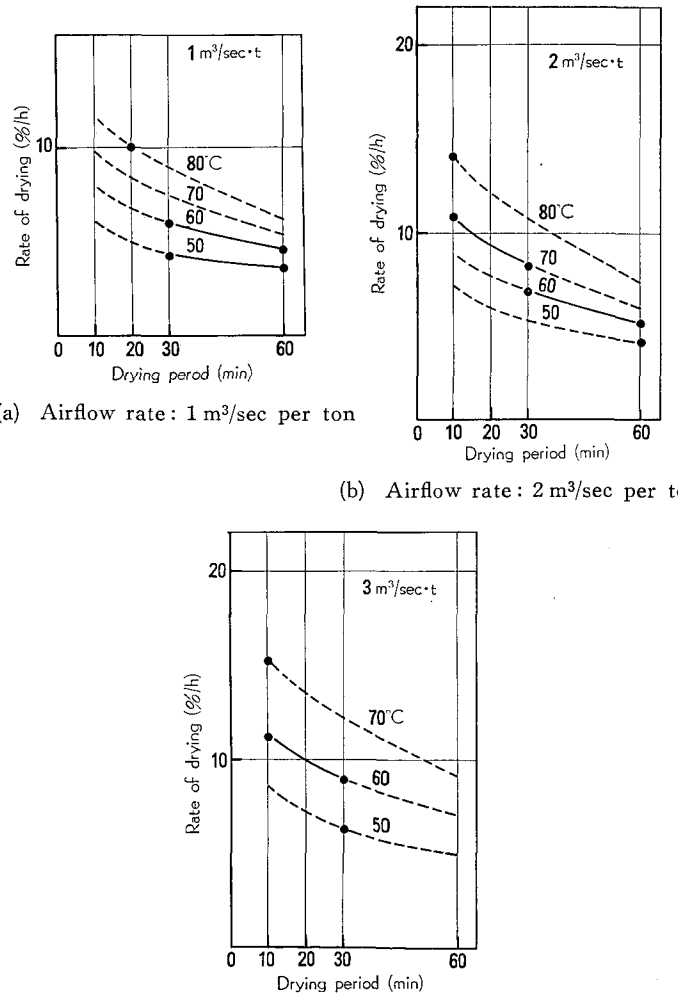

(a) Airflow rate: 1 m^3/sec per ton

(b) Airflow rate: 2 m^3/sec per ton

(c) Airflow rate: 3 m^3/sec per ton

Fig. 3. Drying rate for barley at various airflow rate, air temperature and drying period; tempering time: 3 hr.

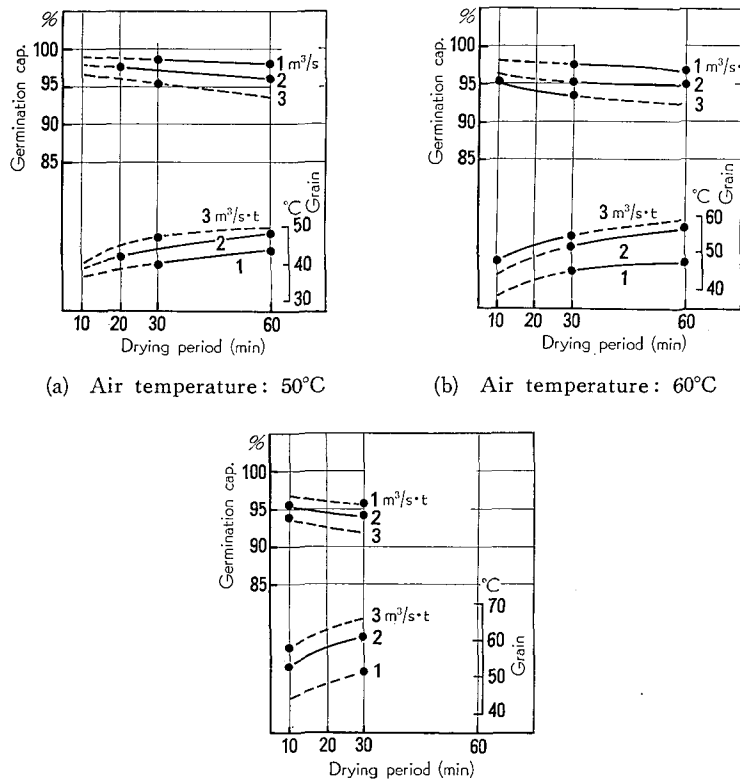

Fig. 4. Germination capacity for barley and the maximum grain temperature at various airflow rate, air temperature and drying period; tempering time; 3 hr.

temperature reached about 50°C and the germination capacity of barley was reduced to 94.5%, whereas, at the drying air temperature of 60°C (Fig. 4-(b)), the airflow rate of 1 m^3/sec per ton and the drying time of a 10 min/pass, the maximum grain temperature rose to 36.5°C and the germination capacity was maintained at 97.5%, which was slightly lower than the initial germination capacity of 99%. Considering the drying rate of 5.0%/h for the former drying conditions and 7.7%/h under the latter conditions, the most suitable drying conditions can be decided by determining the highest speed of drying rate which would result in no reduction of the germination capacity. In this case, the grain temperature is recognized as a useful index for operators to control the drying conditions.

From the results obtained above, it was found that the maximum grain

temperature for barley should be limited under 40°C during all stages of the drying process in the multi-stage dryer system.

2. Wheat

(1) Drying rate

Fig. 5 shows the drying rates and the maximum grain temperature of

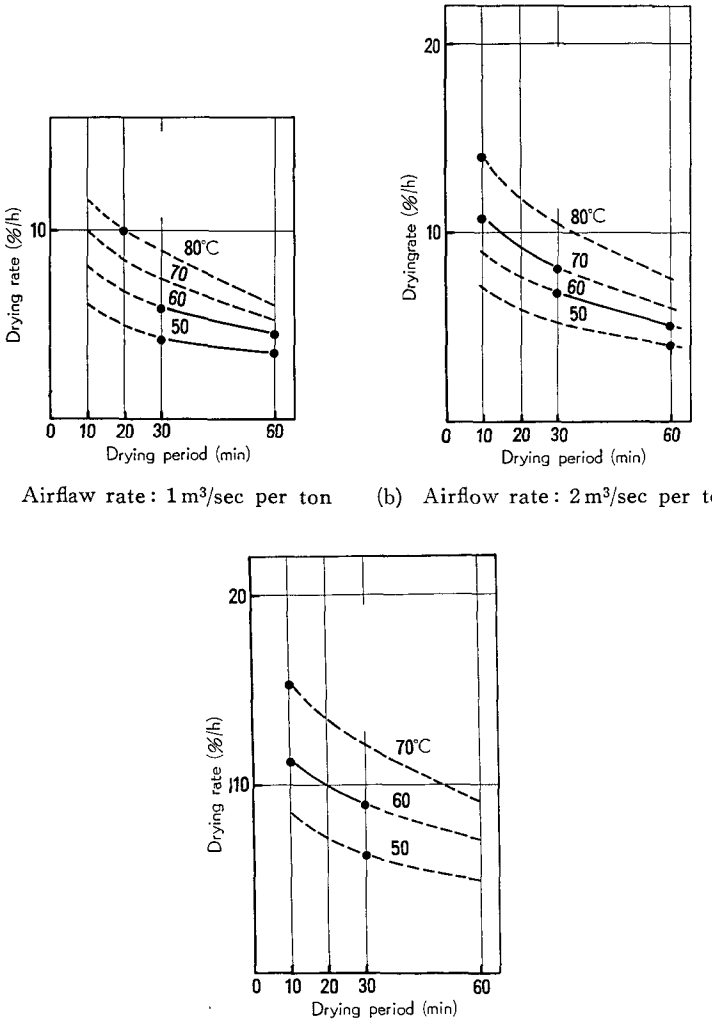

(a) Airflaw rate: 1 m³/sec per ton (b) Airflow rate: 2 m³/sec per ton

(c) Airflow rate: 3 m³/sec per ton

Fig. 5. Drying rate for wheat at various airflow rate, air temperature and drying period; tempering time: 3 hr.

wheat plotted against drying time of each pass with 4 ranges of air temperature as the parameter, for airflow rates of 1, 2 and 3 m^3/sec per ton, respectively. It may be realized when comparing these 3 figures (a), (b) and (c), that the rate of drying, as in the above described results for barley, increases with increasing air temperature and airflow rate and by reducing the one pass drying rime.

(2) Gerimination cayacity

As for the germination capacity of wheat, results obtained were similar to that of barley, and there was a definite limit of maximum grain temperature which would not reduce the germination capacity (Fig. 6). It was

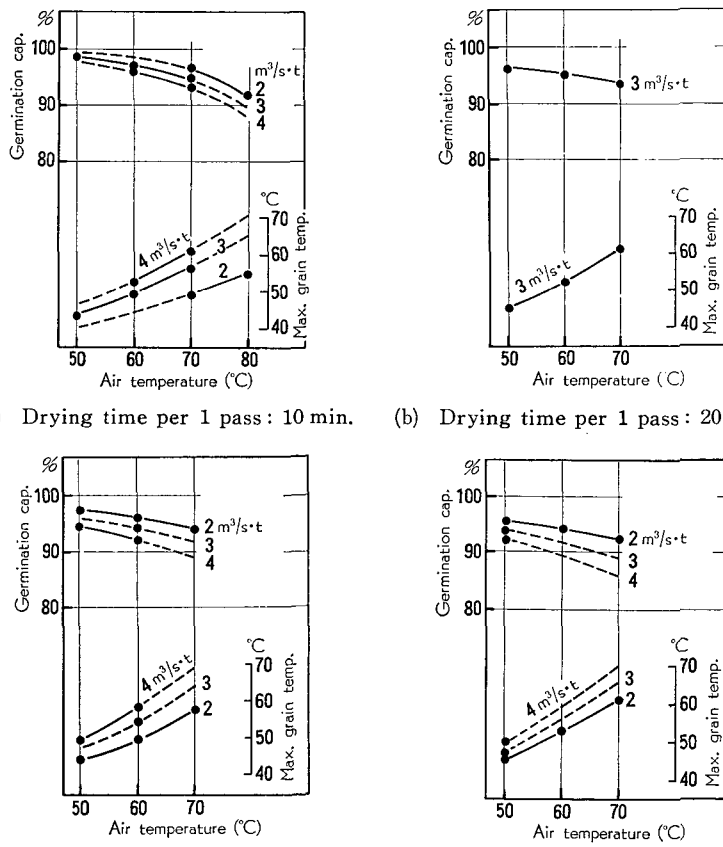

(a) Drying time per 1 pass : 10 min. (b) Drying time per 1 pass : 20 min.

(c) Drying time per 1 pass : 30 min. (d) Drying time per 1 pass : 60 min.

Fig. 6. Germination capacity for wheat and the maximum grain temperature at various airflow rate, air temperature and drying period ; tempering time ; 3 hr.

found that the maximum grain temperature should not exceed 50°C for maintaining a germination capacity of over 90%, which is generally considered to be optimal for seed wheat. Therefore, at a drying temperature of 60°C and airflow rate of 4 m^3/sec per ton, it would be possible to maintain the germination capacity at 90% or over provided that the drying time of each pass is held below 30 min, even though the air temperature is raised to 60°C (Fig. 6-(c)).

(3) **Glassy grain rate**

The results of calculation of glassy grain rate for drying-tested wheat under various drying conditions are plotted against drying time per 1 pass in Fig. 7, under 4 ranges of drying air temperatures. Fig. 7-(a) shows the relation between the glassy grain rate and drying time per 1 pass at an air temperature of 50°C and it was recognized that with the increase in airflow rate and a longer drying time per 1 pass, a higher reduction of glassy grain rate can be obtained. The same trend of curves may be recognized that

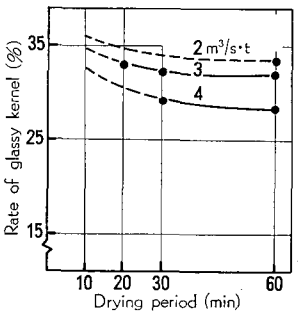

(a) Air temperature: 50°C

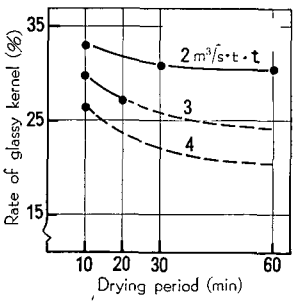

(b) Air temperature: 60°C

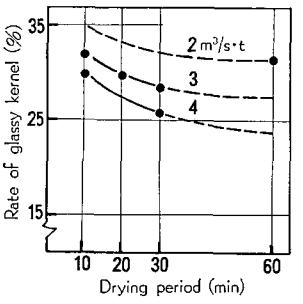

(c) Air temperature: 70°C

Fig. 7. Rate of glassy kernel for wheat at various airflow rate, air temperature, and drying period; tempering time: 3 hr.

reduction of glassy rate are increasingly affected by drying air temperature than by other drying factors.

(4) Gluten content

The gluten content of sample wheat before drying tests was 31.8%, which is not such a high value for wheat used for bread-baking. Fig. 8 shows the relationships between gluten content and drying air temperature over 3 ranges of airflow rate and 4 ranges of drying time per 1 pass, in addition to showing the variation of the maximum grain temperature. At any range of airflow rate and drying period, the gluten content tends to decrease and the maximum grain temperature increases, with the increasing drying temperature. It was recognized in the analysis of the relationship between the gluten content and the maximum grain temperature, that the

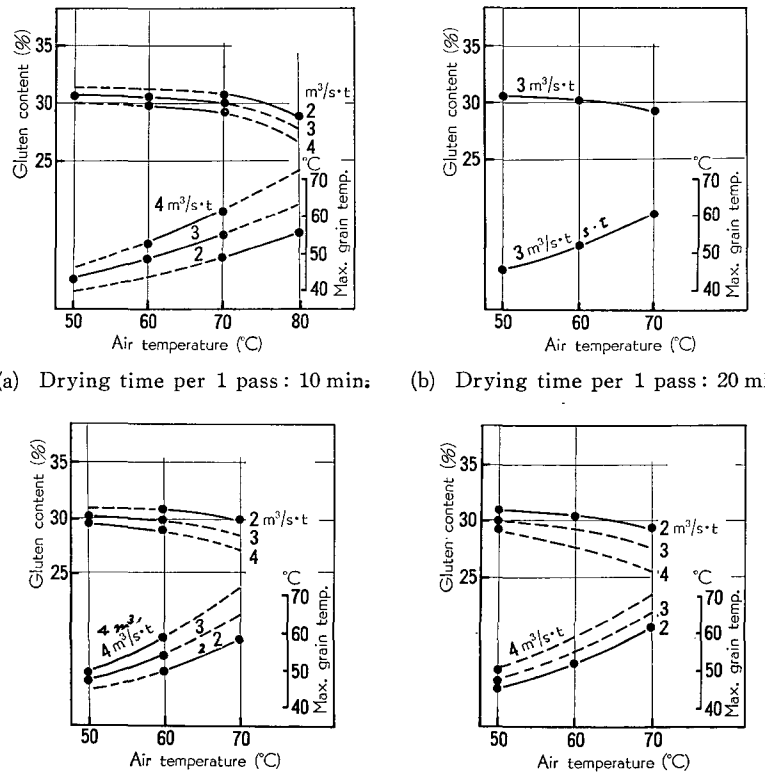

(a) Drying time per 1 pass : 10 min; (b) Drying time per 1 pass : 20 min.

(c) Drying time per 1 pass : 30 min. (d) Drying time per 1 pass : 60 min.

Fig. 8. Gluten content and the maximun grain temperature for wheat at various airflow rate, air temperature and drying period ; tempering time : 3 hr.

gluten content is reduced to below 30% when the maximum grain temperature is in excess of 50°C.

This means that the more severe the drying conditions are the higher the reduction in gluten content is. It is considered that the cause of gluten reduction is attributable to thermal effect, by which water-soluble protein was increased in sample dough and was washed away by hand-washing.

(5) **Flour qualities**

Farinograph, in general, is used for determining water absorption and mechanical properties of dough, including dough consistency, dough development time, dough stability, elasticity and weakning of dough, and valorimeter value (v. v.) is used as an index for evaluating the farinogram. It is generally recognized that the higher the valorimeter value, the stronger the flour.

The results obtained from the farinograph test in this work are summarized in Fig. 9, showing v. v. against drying time per 1 pass at air temperatures of 50, 60, 70 and 80°C and at an airflow rate of 2, 3, and 4 m^3/sec per ton. It may be realized that valorimeter values increase with increase of drying times per 1 pass, but are hardly affected by changing of the drying air temperature or increase of the airflow rate within the limits of this study.

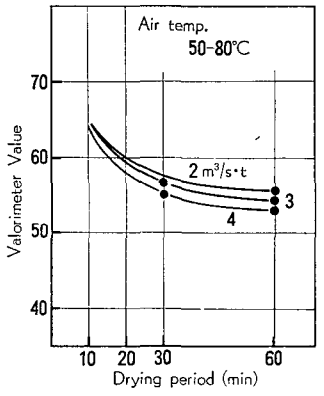

Fig. 9. Valorimeter value of farinogram for flour at various airflow rate, air temperature and drying period; tempering time: 3 hr.

Extensograph tests are usually done to determining extensibility, maximum resistance to extention, energy (indicated by area of extensigram) and ratio figure, together with farinograph tests.

As an example, extensigram areas at 135 minutes (third measurement) for drying-tested wheat flour were plotted against drying times per 1 pass, with parameters of different airflow rates and drying air temperatures (Fig. 10).

Amylograph is a popular instrument used to predict the rheological properties of starch slurry processing, and the starch behavior is evaluated by maximum viscosity value measured in Brabender Units (B. U.). The average value of maximum viscosity for naturally dried wheat in this work was 220 B. U., which seems considerably lower as compared with normal bread-making wheat varieties.

The results obtained from amylograph tests are summarized in Fig. 11, showing the maximum viscosity curves in B. U. against the drying time per 1 pass with parameters of drying air temperature and airflow rate. It was found that the maximum viscosity decreases promptly with the increasing drying time per 1 pass, and this tendency becomes more promt with the increasing drying air temperature and airflow rate. This indicates that the more severe the drying conditions are, the greater the reduction of maximum viscosity is.

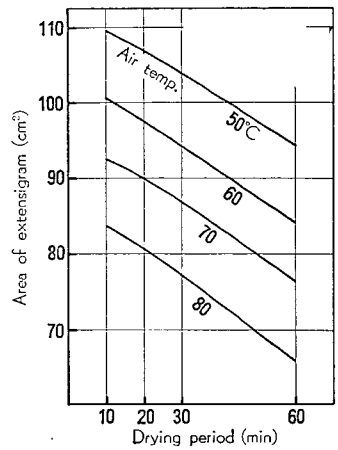

(a) Airflow rate: 2 m³/sec per ton

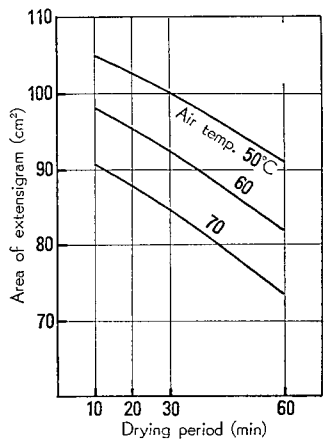

(b) Airflow rate: 3 m³/sec per ton

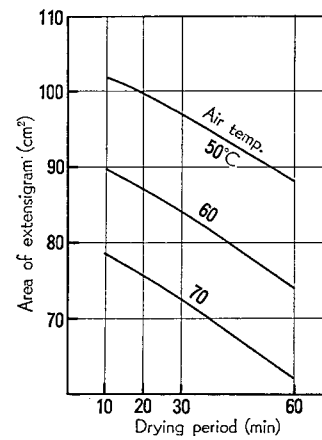

(c) Airflow rate: 4 m³/sec per ton

Fig. 10. Area of extensigram for flour at various airflow rate, air temperature and drying period; tempering time: 3 hr.

The results of the Brabender tests described above suggest that although the difference in flour qualities are mainly attributable to the difference in variety of the parent wheat, these qualities are affected by drying conditions, such as airflow rate, drying air temperature, drying time per 1 pass and maximum temperature in the artificial grain drying process.

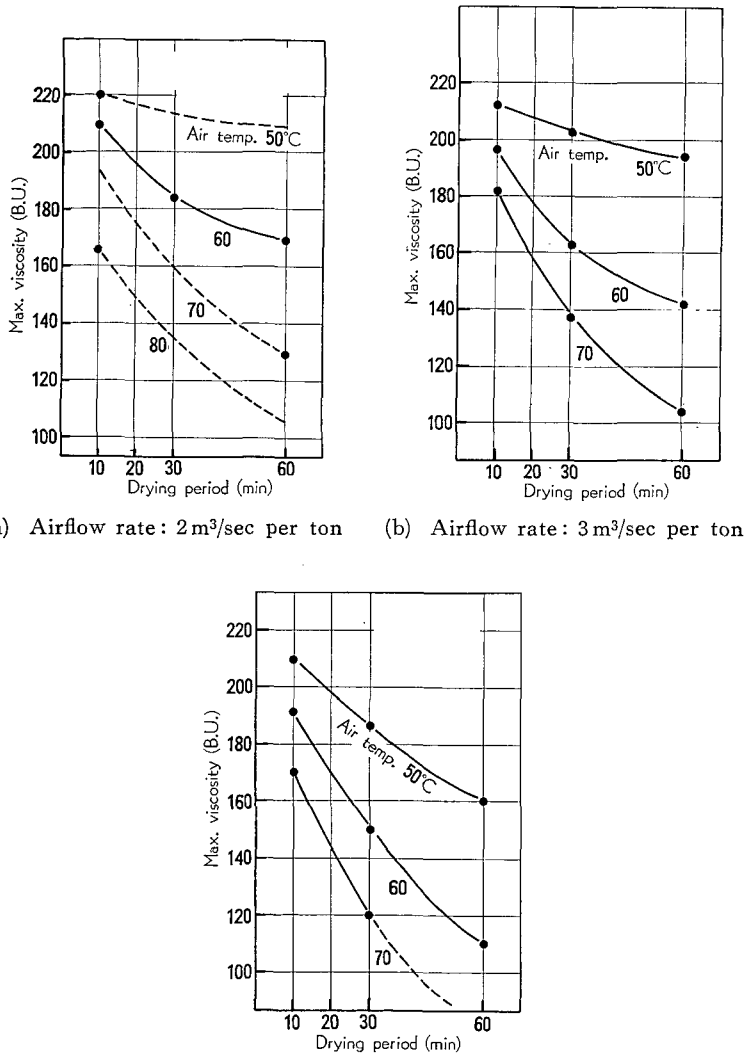

(a) Airflow rate: 2 m³/sec per ton (b) Airflow rate: 3 m³/sec per ton

(c) Airflow rate: 4 m³/sec per ton

Fig. 11. Maximum viscosito of amylogram for flour at various airflow rate, air temperature and drying period; tempering tims: 3 hr.

Summary

Multi-stage drying tests for barley and wheat were carried out using an experimental apparatus designed by the authors, and herein are reported drying data and relationships between drying conditions and grain qualities.

The results obtained are summarized as follows:

1. For a fixed tempering time (3 hours), the drying rate increases with the increasing airflow rate and drying temperature and with the decreasing drying time per 1 pass, for both barley and wheat.

2. Since germination capacities for both barley and wheat are strongly affected by thermal deterioration, it is recommended that drying operators should adjust various drying conditions by controling the maximum grain temperature so not to exceed 45°C during any stage of the drying process.

3. Gluten content and glassy kernel rate of wheat are affected, in the same manner as germination capacity, by drying conditions, from which it is concluded that the maximum grain temperature should not be in excess of 45°C at any stage of the drying process.

4. From the Brabender tests for sample flour, valorimeter value in farinogram, extensigram areas, and maximum viscosities in amylogram are all reduced by increasing the airflow rate, drying air temperature and drying time per 1 pass, and also these increases in drying factors resulted in increasing the maximum grain temperature during the process of multi-stage drying.

Acknowledgements

The authors wish to express their sincere appreciation to Dr. T. YOSHIDA, Professor of Faculty of Agriculture, Hokkaido University; for the guidance and encouragement for performing this study. Also, the authors wish to acknowledge the contribution of the Nissin Flour Milling Co., Hokodate, Japan, where Brabender tests using their facilities were kindly conducted for this study.

Literature Cited

1. BECKER, H. A. and SALLANS, H. R.: A study of internal moisture movement in drying of the wheat kernel, *Cereal Chem.*, **32**: 212–226, 1955
2. BECKER, H. A. and SALLANS, H. R.: A study of the desorption, ithotherms of wheat at 25°C and 50°C, *Cereal Chem.*, **33**: 79–91. 1956
3. FOSTER, G. H.: Methods of conditioning shelled corn, Agr. *Engr.*, **31**: 497–502. 1950

4. Grain drying recommendations by The Crop Dryer Manufacturers Association, I11. U. S. A., 1956.
5. HARRIS, R. H. and SIBBITT, L. D.: Watch that grain drying, (Redrawn from C. W. HALL "Drying farm crops") *North Dakota Agr. Coll. Bull.*, **14**: 171-175, 1952.
6. ITOH, K., TERAO, H., IKEUCHI, Y. and YOSHIDA, T.: Drying of rough rice (1), (in Japanese), *Jou. of the Soc. of Agr. Mach., Japan*, **35**: 385-392. 1974
7. ITOH, K., TERAO, H., IKEUCHI, Y. and YOSHIDA, T.: Drying of rough rice (2), (in Japanese), *Jou. of the Soc. of Agr. Macn., Japan*, **35**: 393-398. 1974
8. ITOH, K., TERAO, H., IKEUCHI, Y. and YOSHIDA, T.: Drying of rough rice (3), (in Japanese), *Jou. of the Soc. of Agr. Mach.*, **36**: 115-125. 1974
9. JOHNSON, W. H.: The harvesting and storing of high moisture wheat (Redrawn from C. W. Hall "Drying farm crops"), Mimeo, Dept. of Agr. Engr., Ohio Agr, Exp. Sta., 1955.
10. MUNTONA, LIMITED, REDFORD and EDWARD FISON, LTD., IPSWICH: Monographs of combine harvested grain, London, (Redrawn from C. W. Hall "Drying farm crops") 1952.
11. OXDEY, T. A.: The movement of heat and water in stored grain, ("Redrawn from H. Edholm" "Undersoningar Anaede av Spanumal") *Cereal Chem.*, **17**: 84-100. 1940
12. RAMSER, J. H: Effect of drying temperatures on quality of wheat (Redrawn from C. W. Hall "Drying farm crops"), Circ. 730 I11. Agr. Exp. Sta., Univ. of I11. 1954.
13. SIMMONS, W. H. C., WARD, G. T., MCWEN, E.: The mechanism of drying, *Trans. Insu. Chem. Engr.*, **31**; 265-278.1953
14. SIMMONS, W. H. C., WARD, G. T., MCEWEN, E.: The drying of wheat grain Part 2 Through-drying of deep beds, *Trans. Inestu. Chem. Engr.*, **31**: 219-283. 1953
15. SIMMONDS W. H. C., WARD G. T., MCEWEN, E.: The drying of wheat grain, Part 3, *Trans. Instu. Chem. Engr.* **32**: 115 1954.
16. TROMAS A. M.: Grain drying by through-circulation, *JAER*, **17**: 328-341. 1962
17. TOJO. M. and OKAMURA, T.: Study on the drying characteristics of wheat with high moisture content (in Japanese), *Res. Bull. Obihiro Univ.*, **5**: 113-122. 1967
18. WARNER, G. R. and BROWNE, D. A.,: Drying wheat 2 feet deep in a 50 ft^2 tray, *JAER*, **7**: 112-127. 1962
19. WARNER, M. G. R. and BROWNE, D. A.: Apparatus for the assessment of drying damage and some initial results with barley and wheat, *JAER*, **7**: 359-366. 1962
20. WOODORDE, J. and OSBORNE, L. E.: The drying of wheat in beds one and two feet deep, *JAER*, **6**: 300-309. 1961