J. Fac. Agr. Hokkaido Univ., Vol. 66, Pt. 2 : 263~275 (1995)

Dynamics of Tractor-implement Combinations on Slopes (Part II)
—Computer Simulation of Directional Dynamics—

Mohammed G. YISA, Hideo TERAO, Mamoru KUBOTA
Agricultural Vehicle System Engineering, Faculty of Agriculture,
Hokkaido University, 060 Sapporo, Japan.
(Received October 14, 1994)

Introduction

Considerable research has been conducted on tractor overturning stability and dynamics on sloping ground, much of the work was connected to establishing safe operating slopes and the introduction of the roll over protective structures ROPS and their associated legislature. Gilfilan[1,2] has reported work on the effect of slopes on the forces and moments acting on tractors operating uphill or downhill. The overturning behaviour of tractor and trailer combinations was analyzed by other researchers[3,4]. A detail review of the subject has been presented[5]. Little work has been done on steering control and directional stability characteristics of tractor-implement combinations TICs or their handling performance on slopes generally.

When agricultural wheeled tractors are operated across a slope, they tend to slide down as a result of the component of the gravitational force acting on the tractor and directed down the slopes which results in load transfer. The consequence of this, is that maintaining a straight line motion or motion along a desired path becomes difficult and constant directional correction is necessitated. Other shortcomings resulting from this, are, extra power requirement, increased fuel consumption, uneven motion of operating parts in attached implements, irregular seed distribution by planters, insufficient depth of tillage and poor conditions for plant growth, Amelchenco et al., 1978 as reported by Lyasko et al., 1993[6].

The purpose of this research is to conduct extensive studies on the directional stability of TICs operated on agricultural slopping land through computer simulation with the objective of explaining sideslip phenomenon and the effect of load transfer distribution LTD in agricultural TICs operated on slope. This is necessary to privide operators of existing tractors with operational guidelines and designers of new tractors with information peculiar to tractors operated on slopes. In pursuance of the above objectives a mathematical model was developed and computer simulation was conducted. This paper presents the development of the model and the results of computer simulation.

NOMENCLATURE

α_f-front wheel slip angle [°]
α_r-rear wheel slip angle [°]
α_g-sideslip angle [°]
φ-slope angle [°]
ψ-yaw angle [°]
δ-steer [°]
C_{bri}, C_{rri}-coefficient of rolling resistance
C_{li}-lateral force coefficient
C_{fi}-lateral force coefficient (front)
C_{ti}-traction coefficient
v_x, v_y-components of the translational velocity
ω_z-yaw velocity of the tractor center of gravity [rad/s]
ν_{x0}, ν_{y0}, ω_{z0}-initial conditions
g-acceleration due to gravity [m/s^2]
I_{zz}-yaw moment of inertial [N/ms^2]
L_i-lateral force [N] , i = 1, 2, 3, 4
M-mass of tractor [kg]
N_i-normal force [N] , i = 1, 2, 3, 4
N_{if}-normal force on flat, i = 1, 2, 3, 4
R_{rt}-lateral load transfer distribution [%]
R_{fa}-logitudinal load transfer distribution [%]
T_i-traction force [N] , i = 1, 2, 3, 4
x, y, ω_z-vehicle fixed coordinate system
X, Y, ψ-ground fixed coordinate system
h_1-centre of gravity height from the ground [m]
h_2-drawbar hitch height from the ground [m]
l_1-wheelbase [m]
l_2-front tread width [m]
l_3-rear tread width [m]
l_4-distance from rear axle to centre of mass [m]
l_5-distance from rear axle to drawbar hitch [m]
l_6-distance from a rear wheel to drawbar hitch [m]
RKGM-Runge-Kutta-Gill Method
COM-centre of mass
DH-drawbar hitch

Mathematical Model Development

1. Equations of motion

The general motion of a 4WD tractor without suspension is described by six degrees of freedom for the chassis (3 for translation and 3 for rotation), one degree of freedom for the rotation of each of the independently driven wheels and one degree of freedom for the rotation of the front axle assembly with respect to the chassis. The motions of the driven wheels are coupled through the differential and equal when the axles are been driven without a differential motion.

The behaviour of TICs on slope during a loss of directional stability depends mainly on the motion of the system in the longitudinal x, lateral y directions and the yaw motion of the centre of gravity of the tractor ω_z. A mathematical model for studying directional stability of TICs have been developped based on the following assumptions :

(a) Three degrees of freedom, namely, two translational (longitudinal and lateral) and one rotational (yaw) motion about the tractor centre of gravity are considered

(b) The body fixed coordinate is a centroidal coordinate system

(c) The center of gravity and drawbar location are assumed to lie in the vertical plane containing the longitudinal centerline of the tractor

(e) The normal forces on the tyres act through the respective wheel centres

Summing forces along the x and y vehicle fixed coordinates and moments about the tractor centroid, Figure 1, the following three equations of motion are

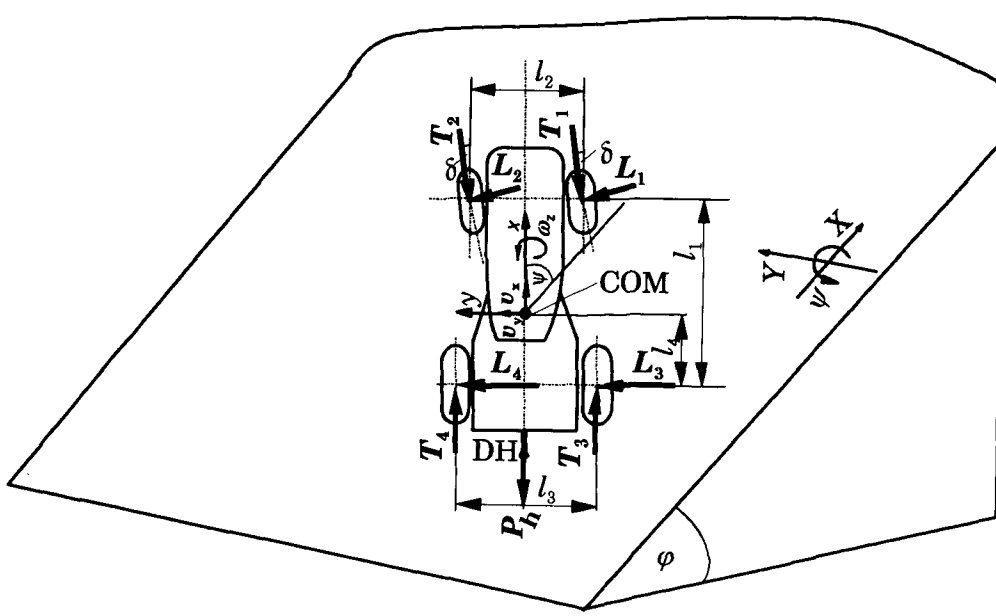

Fig. 1. Tractor dynamic model

obtained.

$$M(\dot{v}_x - v_y\omega_z) = T_r - Mg\sin\varphi\cos\psi - T_f\cos\delta - L_f\sin\delta - P\cos\gamma \tag{1}$$

$$M(\dot{v}_x + v_y\omega_z) = L_r - Mg\sin\varphi\sin\psi - L_f\cos\delta - T_f\sin\delta \tag{2}$$

$$I_{zz}\dot{\omega}_z = -L_r l_4 + L_f(l_1 - l_4)\cos\delta - T_f(l_1 - l_4)\sin\delta \tag{3}$$

where, $T_f = T_1 + T_2, T_r = T_3 + T_4, L_f = L_1 + L_2, L_r = L_3 + L_4$

From above, and assuming the motion of a tractor-implement combination TIC is started from a given initial condition, it implies that, the following equations discribe the motion of the system at any other given condition :

$$v_x = v_{x0} + \frac{1}{M}\int_0^t (T_r - Mg\sin\varphi\cos\psi - T_f\cos\delta - L_f\sin\delta - P\cos\gamma + Mv_y\omega_z)dt \tag{4}$$

$$v_y = v_{y0} + \frac{1}{M}\int_0^t (L_r - Mg\sin\varphi\sin\psi + L_f\cos\delta - T_f\sin\delta - Mv_x\omega_x)dt \tag{5}$$

$$\omega_z = \omega_{z0} + \frac{1}{I_{zz}}\int_0^t (-L_r l_4 + L_f(l_1 - l_4)\cos\delta - T_f(l_1 - {}_4)\sin\delta)dt \tag{6}$$

Conducting the indicated integration of equations (4)-(6) will result in the velocity components (v_x, v_y, ω_z) of the centre of gravity of the TIC at a given time. Integration of these velocities will not, however, give the orientation of the TIC in space at a given time since these velocity vectors change their orientation with time. To obtain the orientation in space of the TIC, the following coordinate transformation is performed, equations (7)-(9).

$$\dot{X} = v_x\cos\psi - v_y\sin\psi \tag{7}$$

$$\dot{Y} = v_x\sin\psi + v_y\cos\psi \tag{8}$$

$$\dot{\psi} = \omega_z \tag{9}$$

Integration of equations (7)-(9) will yield the position and angular orientation of tractor-implement combination at any given time.

2. Tyre Forces

Tyre force is defined as an external force acting on a wheel. Since it is through the wheels that the major external forces are applied to a tractor or a tractor-implement system, the wheel forces have substantial influence on the dynamic behaviour of the system. A detail review of research on forces acting on agricultural tyres has been presented by other authors[7),8),9)] no further review of the subject is presented here. The tyre force has three mutually perpendicular

components.

2.1 Radial Force

Assuming that the ground surface is non-deformable, the radial (normal) forces are obtained by a dynamic force balance, with the assumption that the tractor is acted upon by a drawbar load P and operating on a slope of angle φ with a specified heading angle ψ. A full derivation of these equations is given by Yisa et. al[10]. The equations are :

$$N_1=\left[\frac{l_4}{2l_1}-\frac{h_1}{2l_1}\tan\varphi\left(\cos\psi-\frac{2l_4}{l_2}\sin\psi\right)\right]Mg\cos\varphi-\frac{l_5}{2l_1}P\sin\gamma-\frac{h_2}{2l_1}P\cos\gamma \tag{10}$$

$$N_2=\left[\frac{l_4}{2l_1}-\frac{h_1}{2l_1}\tan\varphi\left(\cos\psi-\frac{2l_4}{l_2}\sin\psi\right)\right]Mg\cos\varphi-\frac{l_5}{2l_1}P\sin\gamma-\frac{h_2}{2l_1}P\cos\gamma \tag{11}$$

$$N_3=\left[\frac{l_1-l_4}{2l_1}-\frac{h_1}{l_1}\tan\varphi\left(\frac{\cos\psi}{2}+\frac{l_1-l_4}{l_3}\sin\psi\right)\right]Mg\cos\varphi+\frac{l_1+l_5}{2l_1}P\sin\gamma+\frac{h_2}{2l_1}P\cos\gamma \tag{12}$$

$$N_4=\left[\frac{l_1-l_4}{2l_1}-\frac{h_1}{l_1}\tan\varphi\left(\frac{\cos\psi}{2}+\frac{l_1-l_4}{l_3}\sin\psi\right)\right]Mg\cos\varphi+\frac{l_1+l_5}{2l_1}P\sin\gamma+\frac{h_2}{2l_1}P\cos\gamma \tag{13}$$

2.2 Longitudinal Force

The circumferential force is made up of traction forces and rolling resistance forces, and braking forces. These forces are expressed in a manner similar to that described by Davis et. al. (1974)[11] as a function of the radial force, slip angle and experimentally determined coefficient of rolling resistance.

$$T_i=[-sign(v_x)(C_{rri}+C_{bri}|\alpha_i|)+C_t]N_i \tag{14}$$

where, i=1, 2, ., 4

2.3 Lateral forces

A pneumatic tyre can be considered to develop a lateral force whenever the direction in which the tyre is headed differs from the direction of the plane of the wheel itself. This difference in directions termed the tyre slip angle, is expressed in terms of the velocities of the wheel in the vehicle coordinate system.

$$\alpha_f=\delta_i-\frac{v_y+(l_1-l_4)\omega_z}{v_x} \tag{15}$$

$$\alpha_r=\frac{l_4\omega_z-v_y}{v_x} \tag{16}$$

$$\alpha_g=\frac{v_y}{v_x} \tag{17}$$

The lateral forces are consequently modeled as functions of the slip angle and cornering coefficients. Cornering coefficient is in turn a function of the radial force. Lateral force is thus, expressed as :

$$L_1 = sign(\alpha_i) C_t N_i \tag{18}$$

$$L_i = -sign(\alpha_i) C_t C_f N_i \tag{19}$$

$$C_{ti} = 0.75(1 - e^{-0.3 C_{ni} s_i}) \tag{20}$$

$$C_{fi} = 1 - (C_{ti}/C_{t\max})^2 \tag{21}$$

Simulation

The mathematical model described above was translated into C programme. A flow chart of the programme is shown in Figure 2. The system was assummed to be coasting which allowed a constant forward velocity of 0.5 [m/s] to be usesd throughout the simulations. A number of tractor parameters were needed for the simulation and were determined as shown in Table 1. Three different combinations, tractor alone, TA, tractor with a drawbar pull of 2kN which is about 50% of the rated drawbar pull, TIC-2kN, and tractor with a drawbar load of 4kN which is about 100% of the rated drawbar pull, TIC-4kN were simulated. Other simulations were conducted to investigate the effect of slope angle, heading angle and drawbar force on side slip characteristics of a tractor. The effect of changes in tread width as a design parameter have also been investigated.

Results and Discussions

As a prelude to the investigations whose results follow, the relationship between two major forces acting on a tractor-implement on a slope was investigated, Figure 3. In this figure, normalized lateral force is plotted against heading angle ψ, for slope angles φ of 5°, 10°, 15° and 20°. For a given slope

Table 1. Major dimensions of the tractor used in this simulation

Parameter	Value
Power	11.0 [kW]
M	826.7 [kg]
I_{zz}	353.0 [Nms²]
l_1	1.385 [m]
l_2	0.940 [m]
l_3	0.960 [m]
l_4	0.680 [m]
l_5	0.385 [m]
l_6	0.960 [m]
h_1	0.495 [m]
h_2	0.350 [m]

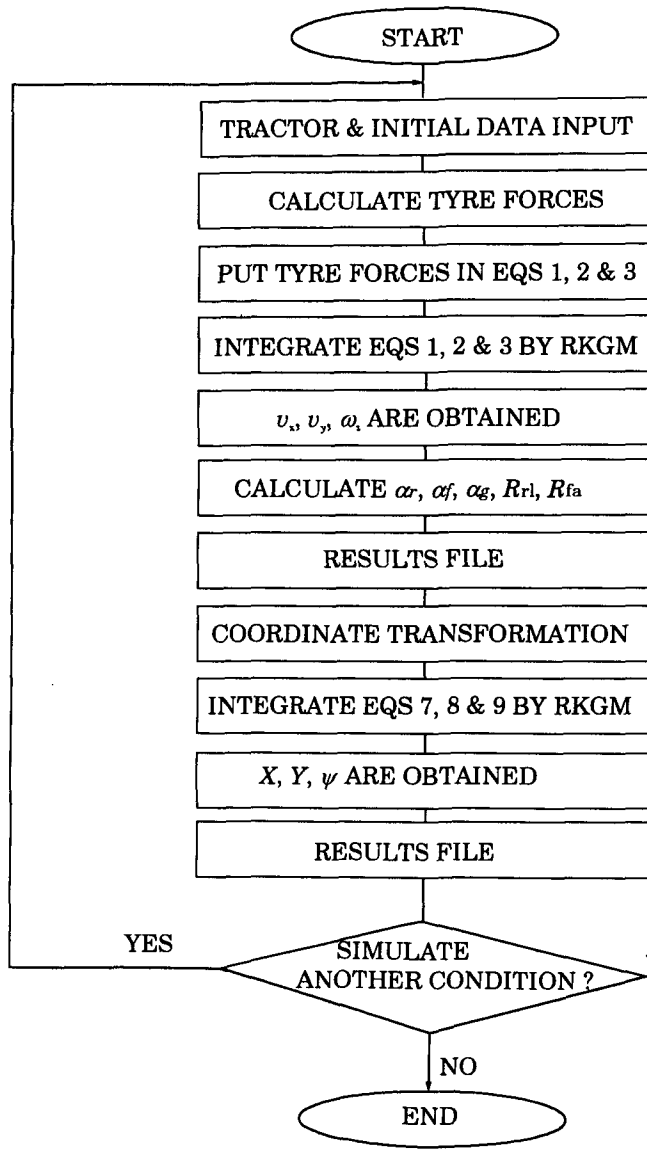

Fig. 2. Flow chart of simulation programme

angle, a heading angle could be selected to give a required normalized lateral force. It is also possible to determine ahead, the values of normalized lateral force attainable for a given tractor configuration operated on a particular slope. In practice, however, there is hardly any farm whose elevation is uniform. In fact most farms are made of compound slopes. It becomes, therefore, necessary to establish the behaviour of tractors and TICs on different slopes and determine which parameters affect their directional dynamics. The results of these investigations are presented in the following sections.

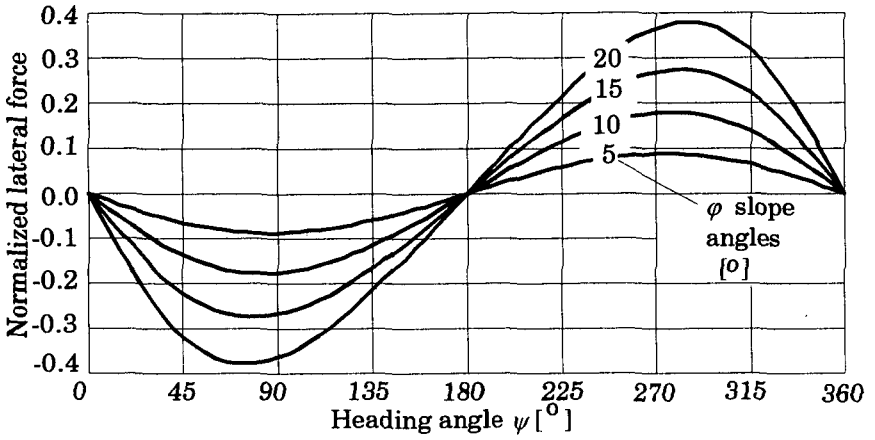

Fig. 3. Effect of slope and heading angles on normalized lateral forces of a tractor

Sideslip angle

The effect of slope and heading angles on sideslip characteristics has been investigated. The results show (Figure 4, Figure 5 and Figure 6) that as the slope angle increases, the sideslip angle also increases and peaked at less than 10° for TA, about 11° for TIC-2kN and about 16° for TIC-4kN. Increase in drawbar load causes an increase in sideslip angle. Since the drawbar loads have been statically applied, their influence on sideslip is expected to be more if they were applied dynamically. Sideslip angle increases with increase in initial heading angle up to a maximum at about 80° and 290° heading angle for the three cases simulated and afterwards declines. To avoid excessive sideslip, operation along these heading angles should be avoided. Sideslip was also found to increase with

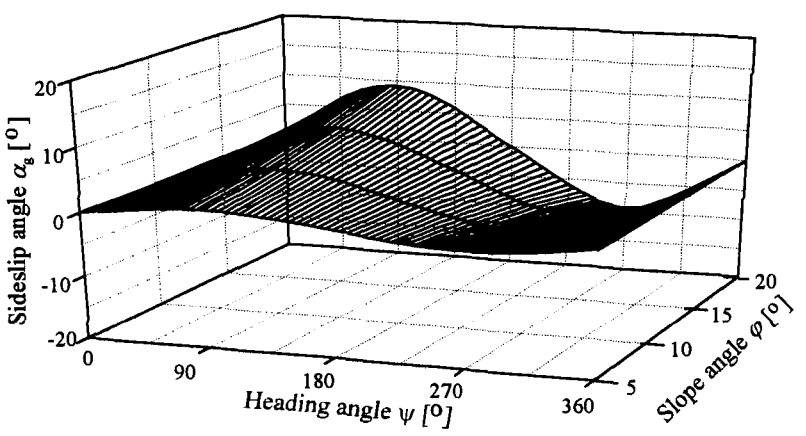

Fig. 4. Changes in sideslip with respect to heading angle for tractor with no drawber load

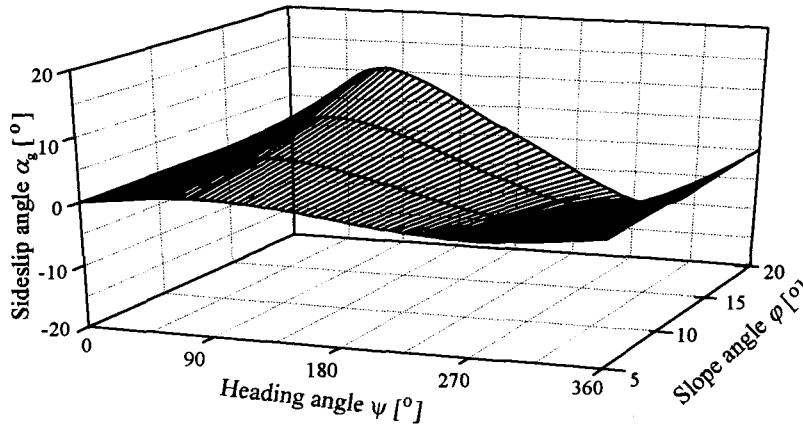

Fig. 5. Changes in sideslip with respect to heading angle for tractor with drawber load of 2kN

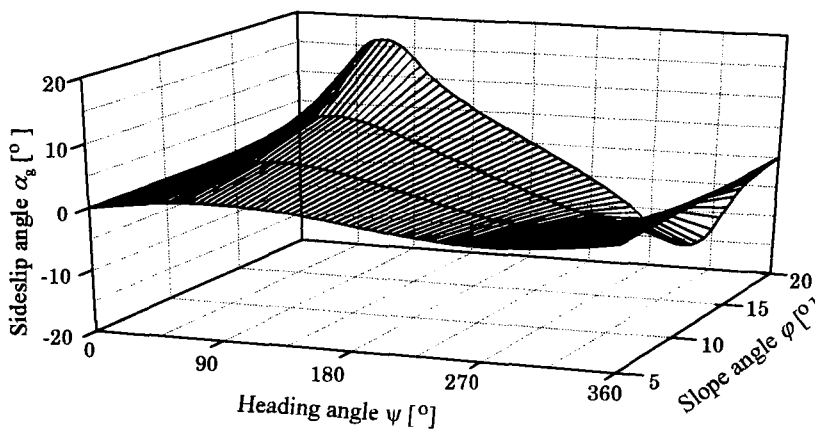

Fig. 6. Changes in sideslip with respect to heading angle for tractor with drawber load of 4kN

increase in slope angle. A slope angle of 20° is regarded as very steep for agricultural use. This angle was therefore chosen as the maximum slope angle for simulation. The results show that the highest value of sideslip angle occur for this slope in all cases simulated.

Load Transfer Distribution

During operation of tractors and other vehicles on a level ground, lateral load transfer occurs when they engage in directional maneouvers. For tractors or TICs operated on a slope, load transfer is even more severe with or without a directional maneouver. The distribution of load transfer between the front and the rear axles, uphill and downhill tyres depends on the system geometry, heading

angle as well as the slope angle.

Lateral load transfer is the vertical load transfer from one of the front tyres (or rear tyres) to the other that is due to acceleration, rotational or inertial effects in the lateral direction. The lateral load transfer distribution Rrl is the distribution of the total load transfer between front and rear expressed as a percentage of total.

$$R_{rl}=\frac{(N_2-N_1)-(N_{2f}-N_{1f})}{(N_2-N_1)+(N_4-N_3)-(N_{2f}-N_{1f})-(N_{4f}-N_{3f})}100 \tag{22}$$

While on the other hand longitudinal load transfer is the vertical load transferred from a front tyre to the corresponding rear tyre that is due to acceleration, rotational or inertial effects in the longitudinal direction. The longitudinal load transfer distribution R_{fa} is given by :

$$R_{fa}=\frac{(N_3-N_1)-(N_{3f}-N_{1f})}{(N_3-N_1)+(N_4-N_2)-(N_{3f}-N_{1f})-(N_{4f}-N_{2f})}100 \tag{23}$$

Longitudinal load transfer distribution varies with both slope angle and tractor heading angle, Figure 6. The variations are in similar manner to the variations of sideslip angle with slope and heading angles. Load transfer distribution peaks occurred at about the same slope angle-heading angle combinations. This would suggest that since load transfer is affected by the tractor geometry among other things, its distribution could be directly influenced by changes in the tractor geometry. This would consequently make changes in sideslip angles.

Since during earlier investigations, Figure 7, it was discovered that peak LTD and hence peak sideslip angles appeared for a heading angle of close to 90° , the effect of tread width variation on load transfer distribution was investigated for this heading angle. The tractor used in this simulation has a front tread width l_2 of 0.94m and rear tread width l_3 of 0.96m. Small variations of 0.05 m were made to both l_2 and l_3 so that they varied as equation (24) and (25).

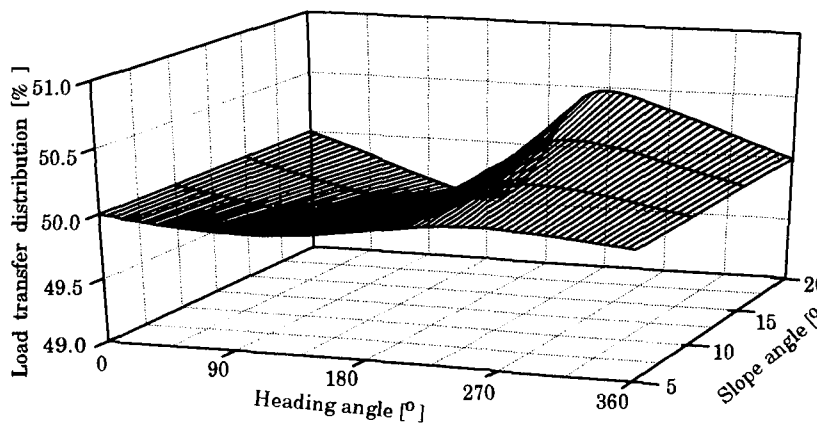

Fig. 7. Changes in load transfer distribution with slope and heading angle

$l_2 = \{0.74, 0.79, \ldots\ldots\ldots, 1.09, 1.14\}$ (24)

$l_3 = \{0.76, 0.81, \ldots\ldots\ldots, 1.11, 1.16\}$ (25)

The results show that small variations in tread width caused substantial variations in the values of load transfer distributions. Longitudinal load distribution values were higher than lateral load transfer distribution, Figure 8 and

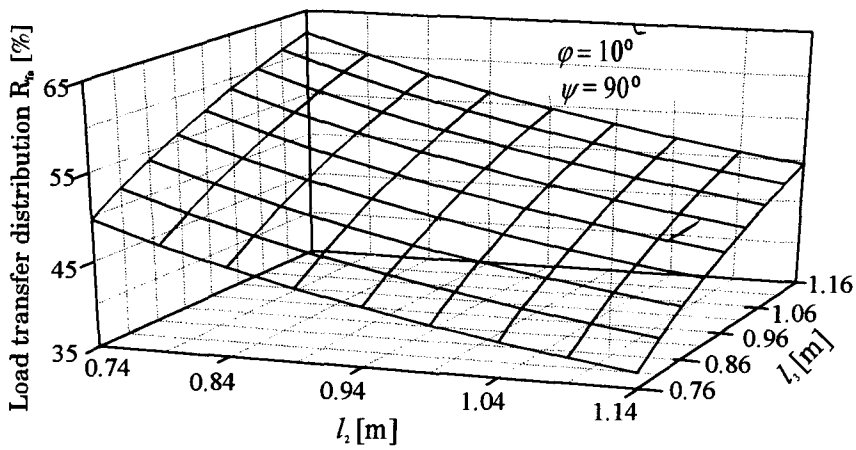

Fig. 8. The effect of tread width on longitudinal load transfer distribution

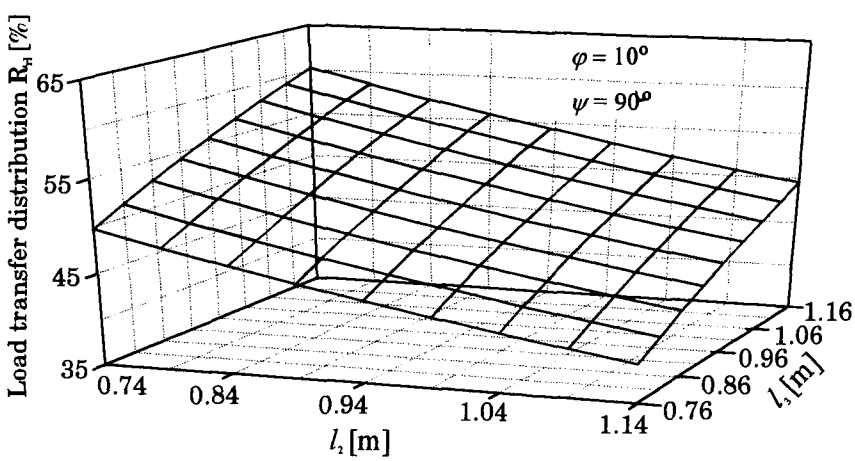

Fig. 9. The effect of tread width on lateral load transfer distribution

Figure 9.

Conclusions

A mathematical model has been developed for the study of tractor-

implement lateral stability and directional dynamics. The results have shown that :

(1) while operating on a slope directional correction is always necessary, this is indicated by the variations in the sideslip angle with slope and heading angles.

(2) The behaviour of TICs on a slope is influenced by LTD. This means that this behaviour could be influenced by adjusting the LTD.

(3) Since for certain combinations of slope angle-heading angle, the slip angles are minimal, if only sideslip is in question, it would be desirable for operators to operate along such combinations.

(4) The investigations reported above have shown clearly the central role played by LTD distribution as regards sideslip behaviour of an agricultural tractor or tractor-implement combination. Further, the investigations have also revealed that the design parameters, l_2 and l_3 greatly affect LTD which as mentioned earlier affects sideslip angle. It follows therefore, that sideslip behaviour can be directly influenced by varying l_2 or l_3 or both.

Summary

The purpose of this research is to conduct extensive studies on the directional stability of tractor-implement combinations TICs operated on agricultural slopping land through computer simulation with the objective of explaining sideslip phenomenon and the effect of load transfer distribution LTD on TICs operated on slope. As a first step to achieving these objectives a model of a tractor with a drawbar load that considers three degrees (longitudinal, lateral and yaw) of freedom was developed. Computer simulation results show that when TICs are operated on a slope directional correction is always necessary. The amount of correction required to maintain operation on a desired path is a function of the system configuration, state variables, slope angle and heading angle. Furthermore, the amount of sideslip is related nonlinearly to load transfer distribution LTD.

References

1. Gilfillan G. : Tractor Behaviour during Motion Uphill, I. Factors Affecting Behaviour, Journal of Agricultural Engineering Research 15(3) : 221-235, 1970.
2. Gilfillan G. : Tractor Behaviour during Motion Uphill, II. Comparisons of Behaviour, Journal of Agricultural Engineering Research 15(3) : 236-243, 1970.
3. Denny C. Davis and Gerald E. Rehkugler : Agricultural Wheel-Tractor Overturns (Part I) : Mathematical Model, Transactions of ASAE 17(3) : 477-483, 1974.
4. Yisa M. G. ; Terao H. and Kubota M. : Dynamics of Tractor-implement Combinations on Slopes, Static Stability Analysis, Paper presented at the 52nd annual conference of the Japanese Society of Agricultural Machinery, Hirosaki University, April 6-7, 1993.
5. Yisa M. G. ; Terao H. : Dynamics of Tractor-implement Combinations on Slopes, State-of-

the-art Review, Journal of the Faculty of Agriculture, Hokkaido University, Vol. 66, Pt. 2 : 89-111, 1995.

6. Lyasko M. I., Terzian V. A. : Evaluation of the Compaction Effect and Directional Stability of a Tractor Operating on Hillsides. Soil and Tillage Research 28(1) : 37-49, 1993
7. Same as 5.
8. Crolla D. A. and Hales F. D. : The Lateral Stability of Tractor and Trailer Combinations, Journal of Terramechanics 16(1) : 1-22, 1979.
9. Plackett C. W. : A Review of Force Prediction Methods for Off-road Wheels, Journal of Agricultural Engineering Research 31 : 1-29, 1985.
10. Same as 4.
11. Same as 3.