J. Fac. Agr. Hokkaido Univ., Vol. 68, Pt. 1 : 17~31 (1998)

Dynamics of Tractor-implement Combinations on Slopes (Part IV)
—— Experimental Validation of Simulation Models ——

Mohammed G. YISA, Hideo TERAO, Mamoru KUBOTA
Agricultural Vehicle Systems Engineering, Faculty of Agriculture,
Hokkaido University, 060 Sapporo, Japan

Introduction

Testing of full-size prototypes and their components has been the backbone of tractor dynamics studies to date and is likely to remain of considerable importance primarily because of their relatively small size and ease in testing compared to ships and aircrafts. In the many cases where existing production or pilot model may be tested with a minimum of adaptation and special instrumentation, the desired tests may be run on the prototypes, provided the desired test conditions may be found or established, the difficulties, other than those already indicated, are for the most part obvious. Extensive changes are likely to be costly and time consuming. Control of the test conditions is apt to be either poor or expensive. Safety of operating personnel may be endangered under certain conditions. Perhaps the most important drawback from an analytical viewpoint is the mechanical and general complexity of any available full-size tractor, which, on one hand, will usually obscure the behaviour under study, and, on the other, preclude the testing of simplified concepts so essential in building a sound analysis.

In a laboratory devoted to scale-model testing, the "initial model overhead" problem may be largely solved by the construction of a few precise, highly flexible components from which an endless variety of configuration may build up. Such models then become apparatus and truly overhead. One area where it is thought that even this approach will be inadequate is in the important one of detailed testing of pneumatic-tyre designs. Certain approximations may be made for the purpose of testing a complete tractor with tyres ; but it is unlikely that the cost of accurate scale-model tyres with scaled flexibility and deflection characteristics under scaled loads would be so little different from the cost of fullsize experimental tyres that their use would not be justified.

Scale model testing has been conducted in support of the analysis and conclusions presented in Part II and Part III 1—3). The following sections duel on the description of the experimental rig, experimental procedures and results of experiments.

Design of model slope

1 Fundamental concept

The intention is to develop an experimental rig which will include : a model slope and a model tractor-implement system which will be operated on this slope. It is envisaged that the slope angle of the model slope should be such that in addition to possibility of tractor operation, overturning experiments should also be possible on it. Therefore, the slope was made such that its slope angle could be varied between 0−30°.

Considering that the major parameters of the tractor (wheelbase, tread, mass, power and operating velocity) are to be variable during experiments, it was decided that the maximum wheelbase of the model tractor should be 25 cm. If we take the model tractor as 1/5 of Kubota L1501 with operational velocity of 1.0 m/s, the operational velocity of the model tractor was obtained to be about 0.2 m/s. Considering the quantity of data to be processed by the controlling computer, a 15 s straight line motion of the model tractor will require a model slope 3.5 × 3.5 m big.

2 Structure and strength of slope

a) Structure

Since the behaviour of agricultural tractors is affected to a large extended by the nature of interaction between the tyres and the ground, the constitution and state of the surface of the model slope is very important. Calculations were conducted for the material of the platform of the slope and the strength of its frame. The platform is supported by a frame made of square pipes. The centre of rotation of the slope is additionally reinforced. Finally, the slope is equipped with support pipes at four corners, Fig. 1.

b) Strength

Figure 2 is a representation of the frame subjected to a bending load. Let ω_f represent theoretical deflection of the frame and ω_r actual deflection. For safety of the frame to be achieved, equation (1) must be satisfied.

$$\omega_f > \omega_r \tag{1}$$

Let the moment of inertia of the square pipe which constitutes a major part of the frame be J. From Fig. 3, we calculate J to be :

$$J = \frac{b^3 h}{12} - \frac{b_1^3 h_1}{12} \tag{2}$$

where,

b : external length [cm]
h : external width [cm]
b_1 : internal length [cm]
h_1 : internal wiith [cm]

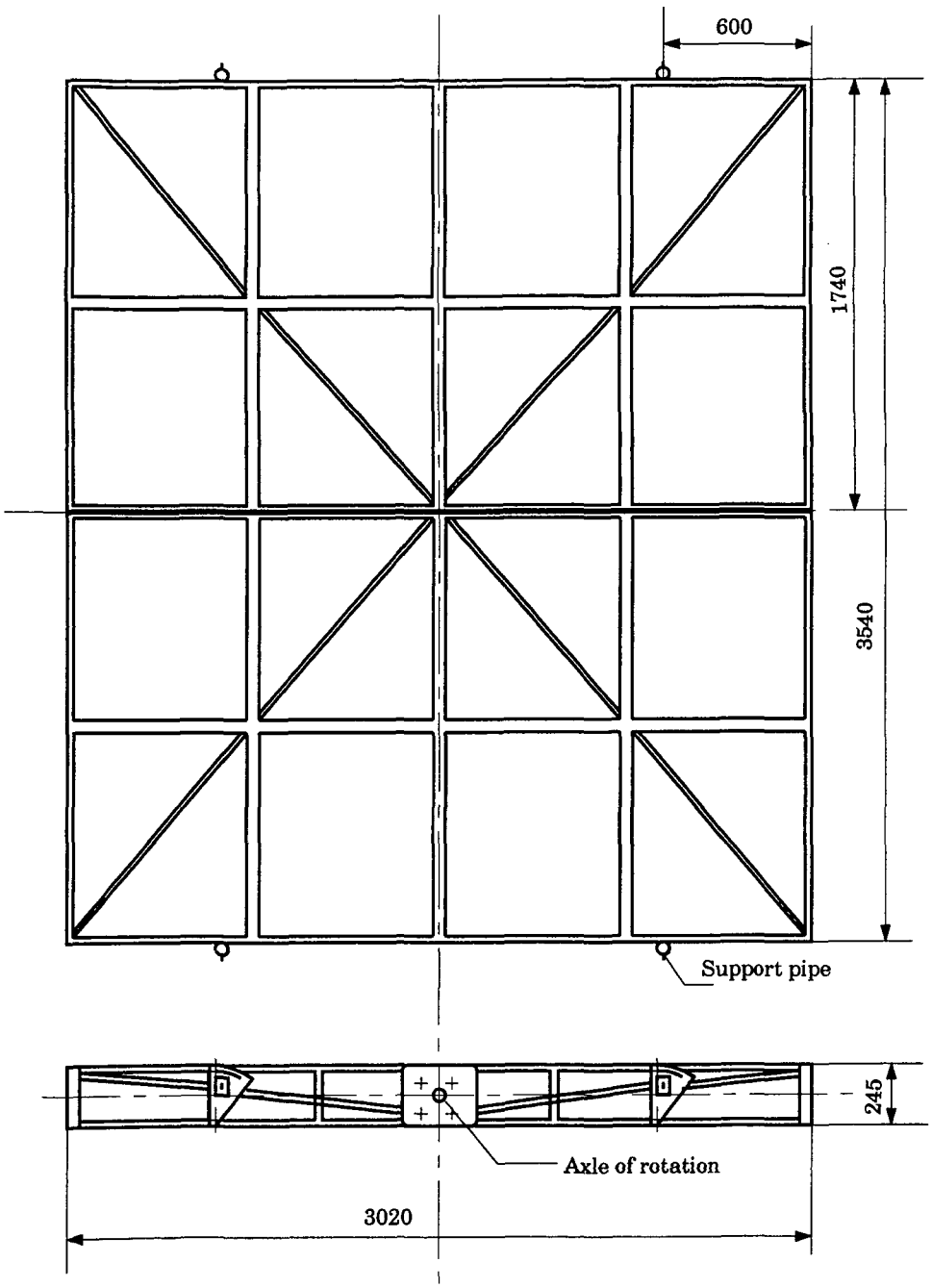

Fig. 1. A view of the model slope frame

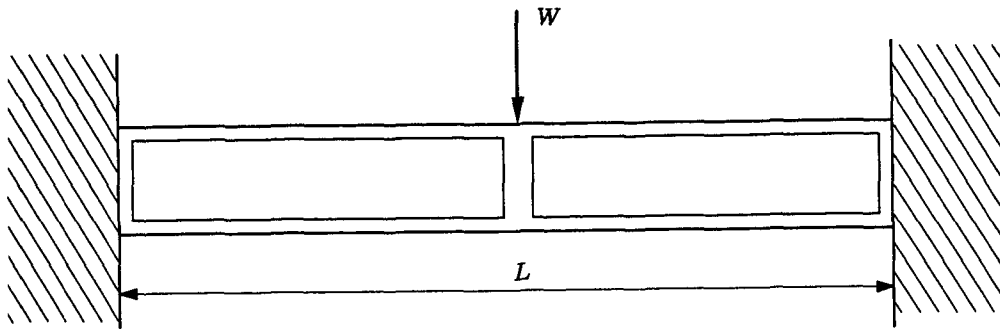

Fig. 2. Determination of the bending conditions of the frame

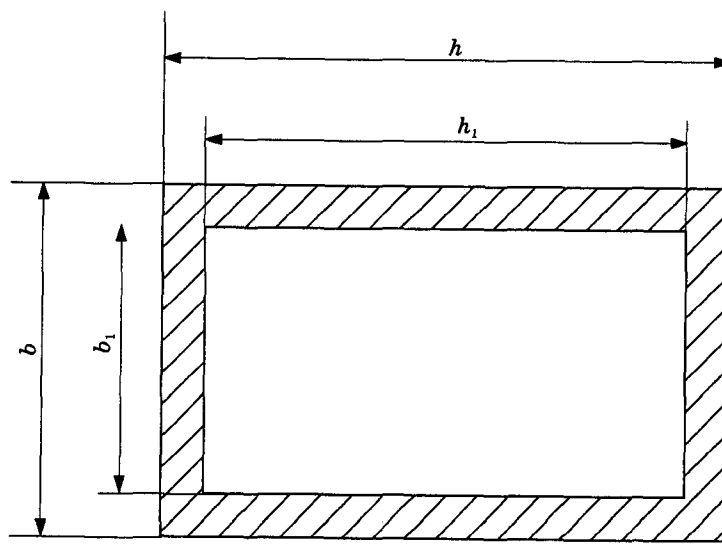

Fig. 3. Cross-sectional view of a reinforcing pipe

For b = 40.0 cm, h = 25.0 cm, b_1 = 34.0 cm and h_1 = 19.0 cm, J = 7.11 cm^4.

After adding the mass of the frame to that of the plank, the structure had a per unit mass of q = 4.67 kg/m (unit mass of plank is 0.7 kg/m. Young's Modulus, E = 205 GPa, the assumed weight of the model tractor plus implement W = 60 N, is taken as the force acting on the slope. If W is the maximum load acting on the frame, the maximum deflection of the frame is given by :

$$\omega_{f\max}=\frac{WL^3}{384EJ}+\frac{qL^4}{384EJ} \tag{3}$$

From equation (2), (3), $\omega_{f\max}$ = 5.98 mm. Although this value is within the permissible limit, additional reinforcement to the frame in the form of 6 mm rods was provided. In Fig. 1 we saw the plank 885 × 755 × 12 mm supported by pipes

at four places. Lets assume that a 60 N of concentrated load is applied to its centre of gravity and to simplify computations, let the rectangular shape of the plank be replaced by a circular plank whose diameter is equal to the breadth of the rectangular plank. This will allow for sufficient safety. The circular plank is externally supported. Its Poisson ratio = 0.3, the maxmum deflection (bending) as a result of the applied load δ_{1max} is given by the following equation :

$$\delta_{1max}=\alpha\frac{Wr^2}{E_1d^3} \tag{4}$$

where,

r : internal radius of the circular plank, 0.44 [m]

E_1 : Young's modulus of wood, 1.2 (GPa)

d : thickness of the wood, 12 [mm]

α : a coefficient dependent on the load used for calculating bending of circular wood material, 0.198

From equation (4), δ_{1max}= 1.12 mm

Deflection due to weight of the plank itself acts also at its centre and it is given by :

$$\delta_{2max}=\beta\frac{q_1a^4}{E_1d^3} \tag{5}$$

where,

q_1 : weight per cross sectional area of plank 8.4 (kg/m^2)

β : a coefficient dependent on the load distribution used to calculate deflection of rectangular material, 0.178

The mass per unit area of plank is taken to be 0.7. After substituting all the parameters into equation (5), δ_{2max} = 0.004 mm. From this result, bending deflection due to the weight of the plank itself is assumed to be negligible.

c) Main stand of the slope

The slope angle can be varied from 0−30°. To achieve this, the arrangement shown in Fig 4 is utilized. Two bearings P206J and a shaft of diameter 30 mm were mounted on top of the stand. From the inner part of the shaft a steel plate is connected to the surface of the slope using 4 M26 bolts. To the outer part of the shaft are connected a stepping motor and a reduction gear which power the slope and at the second outer side of the shaft is connected a potentiometer which is used to adjust the slope angle. The height of the stand is 950 mm, considering that the slope angle must change from 0−30°.

d) Construction of the model slope.

Using the above design considerations a model slope was constructed. Fig. 5 shows a pictorial view of the complete slope. The main stand is fixed to the floor with bolts. To demodulate the slope angle after modulation, four round pipes in sliding plates are used as shown in Fig. 5. An "Oriental Motor" stepping motor (5 coil UPD599−AM) which has a full step of 0.72°/pulse was selected.

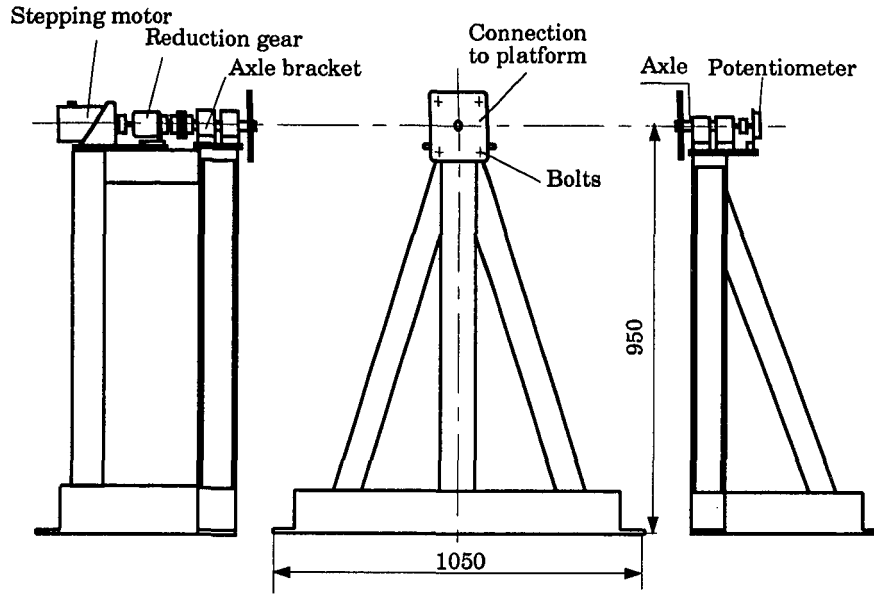

Fig. 4. Main stand of the model slope

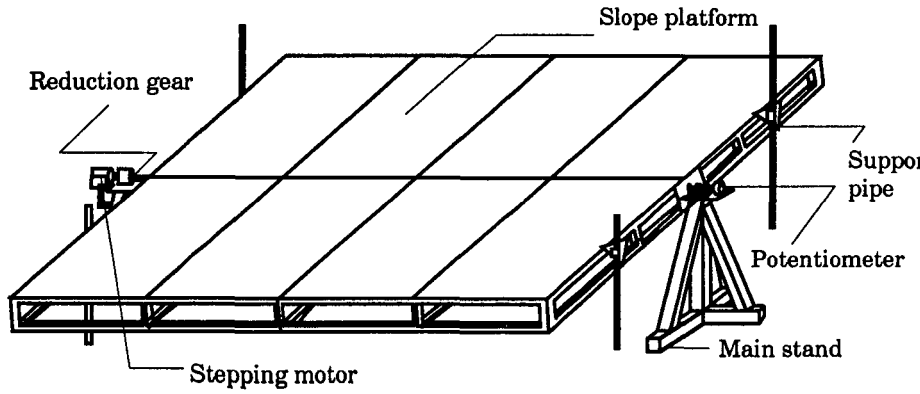

Fig. 5. Pictorial view of the model slope

e) Measurement and control of slope angle

When a model tractor is operated on the model slope, the slope angle of the model slope becomes an important parameter. The setting of slope at an appropriate angle and its control is necessary. The following sections will deal with the model slope control instrumentation and control method. An IBM compatible PC CPU I 486 and 33MHz clockspeed was used as a control computer. For the control of the model slope, three boards were installed and connected to the computer. They are : A/D board, PI/O board and PMC board. The input

voltage and output data from the potentiometer are passed through A/D board and an analog to digital conversion is conducted. Since the A/D board has a 12 bit (=0−4096) digit and a 5 V input voltage of the potentiometer corresponds to its one revolution (360°), angle resolution has therefore 360°/4,096 = 0.088/digit of data accuracy. A limit switch is provided so that the slope angle can not be less than 0° or more than 30°.

Direct control of the electromagnetic brake in the stepping motor is not possible because it uses 24 V current. Therefore, a relay circuit was built in the control box so that open-close control can be conducted using a PI/O board. The stepping motor is controlled by PMC board. The motor is set to operate on half step, i.e., one pulse of the motor gives 0.36°/pulse of rotational angle. Since the reduction gear box used has a ratio of 1/100, the effect on the model slope is 0. 0036°/pulse.

Development of model tractor and model implement

1 Description of the model tractor and model trailer

Having the above theoretical background in mind a model tractor was designed and fabricated. The dimensions of the motor tractor were obtained after applying the principle of similitude and assuming a 1/5 scale of the Japanese commercial tractor, Kubota L1501. The total mass of the model tractor is 7.9 kg. The model tractor has been constructed in such a way as to facilitate changes in its centre of mass and its total mass by addition of weights. It is also possible to change the wheelbase. Other capabilities of the model tractor include the possibility of changing the steer angle while it is at rest. In order to obtain a model whose tyre properties are as close as possible to the prototype, the tyres of a powered off-road recreational vehicle "Nitro Crusher" were modified and used. A stepping motor supplies power through a spur gear and pinion system to a bevel differential gear which in turn transmits the power to the rear wheels, Fig. 6. In order to prevent free rolling of the model it is equipped with an electromagnetic brake switch which is locked once current supply to it is cut off.

A model trailer was also designed and fabricated to represent a trailed implement, Fig. 6. It has the same size and type of tyres with tractor front tyre. It has a mass of 1.8 kg, but it is possible to add additional weights to increase its mass. The distance from the hitch point to its centre of gravity could be varied. This is necessary to allow for good compatibility with the simulation model. The hitch point height could also be varied. The interested reader is referred to reference 4) for further details

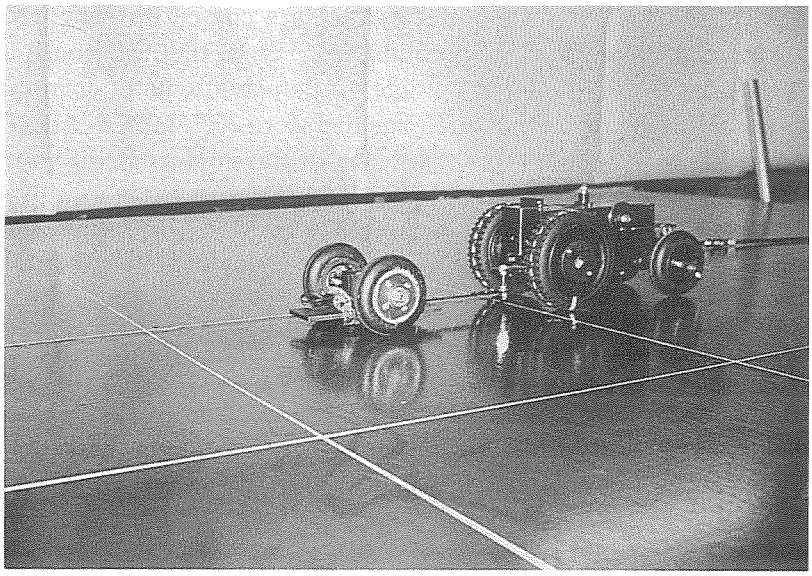

Fig. 6. Photograph of the model tractor-implement combination

2 Measurement of properties

All properties of the model tractor which were pertinent to the dynamics of the tractor were measured to define conditions of the scale-model stability and lateral motion. The dimensions of the model tractor were measured including the dimensions of the tyres. The properties of the model trailer were also determined. Since the tractor is to be operated on a model slope, i.e., in an inclined position, its total weight, rather than the weights supported by the rear and front wheels was used in determination of its centre of gravity. The weighing method of finding the centre of gravity is applied. The moment of inertia of interest to us is that about the vertical axes. With the model tractor suspended as in Fig. 7, the tractor plus the sling will constitute a compound pendulum which will oscillate with a frequency of :

$$f=\frac{\sqrt{Wa/J_s}}{2\pi} \tag{6}$$

where,

J_s : the mass moment of innertia about the pivot [kgm^2]

f : frequency of oscillation [Hz]

a : the radius from the centre of gravity to the pivot point of the sling holding the model tractor [m]

From equation (6), the only unknown parameter is J_s which can then be computed as :

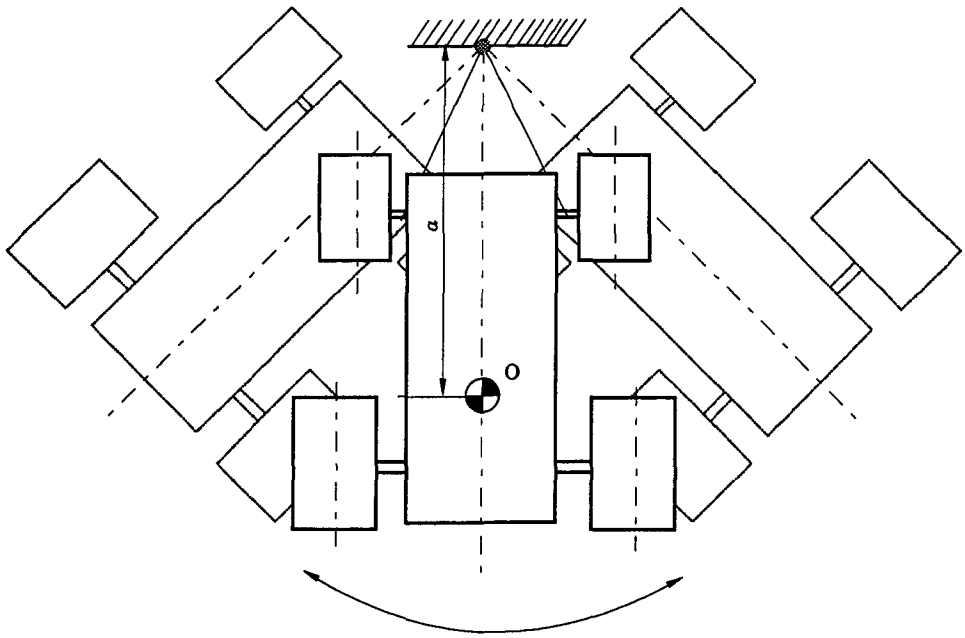

Fig. 7. Determination of moment of inertia

$$J_s = \frac{Wa}{4\pi f^2} \tag{7}$$

After finding the average from 30 trials and substituting other parameters into equation (7), we find, J_s = 0.668 kgm². The moment of inertia of the tractor about I_{zz} is calculated from :

$$I_{zz} = J_s - Ma^2 \tag{8}$$

I_{zz} was calculated to be 0.075 kgm². A similar method was used to determine the moment of inertia of the model implement to be 0.0594 kgm². Table 1 is a summary of the dimensions and other properties of the model tractor and model implement.

3 Tyre properties

To study the lateral characteristics of a tractor-implement system, it is necessary to know the cornering behaviour of its tyres. Figure 8 is a sample graph of the relationship of rolling resistance coefficient with slip angle is shown. The characteristics in both cases are described by third order polynomials with constant coefficients.

4 Control of model tractor-implement system

It is made up of the following components : Motor driver, PI/O board and PMC board. The boards are the same boards used to control the model slope. The tractor is driven by a stepping motor which has the same specifications as the one used for model slope except that its torque is 0.83 Nm.

Table 1. Dimensions of the scale model tractor-implement combination

Parameter	Value [m]	Parameter	Value [m]
l_1	0.206	$b_1 = b_2$	0.021
l_2	0.15	$b_3 = b_4$	0.032
l_3	0.17	$d_1 = d_2$	0.09
l_4	0.077	$d_3 = d_4$	0.136
l_5	0.09	$r_1 = r_2$	0.045
l_6	0.07	$r_3 = r_4$	0.068
l_7	0.07	$z_1 = z_2$	0.042
l_8	0.22	$z_3 = z_4$	0.069
l_9	0.091	M	7.9 [kg]
l_{10}	0.05	m	1.8 [kg]
h_1	0.07	I_{zz}	0.075 [kgm^2]
h_2	0.022	I_{zzl}	0.059 [kgm^2]

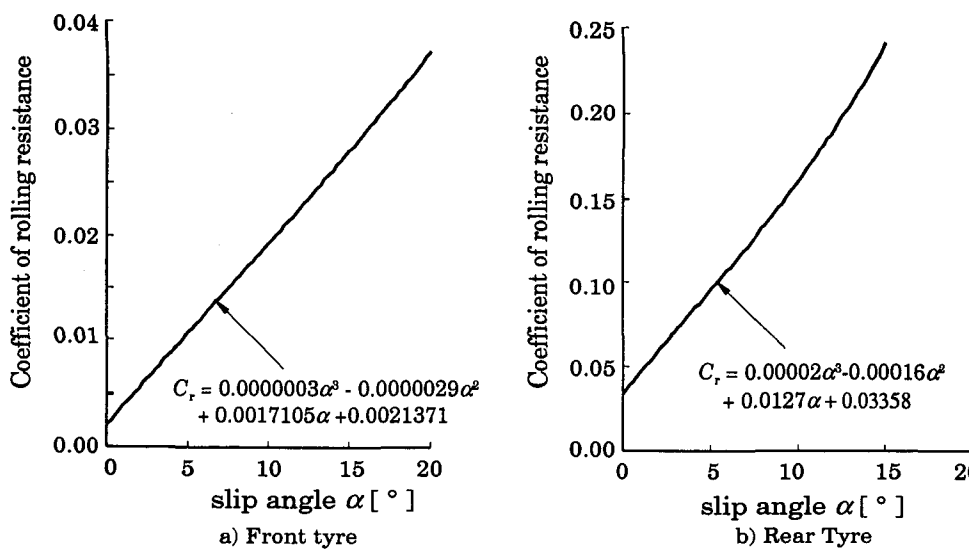

Fig. 8. Rolling resistance characteristics of model tyres

Scale Model Experimentation

In order to validate the simulation methods used in this study limited experiments were conducted using the model slope and the model tractor and model implement described above. A model tractor-implement system which is computer controlled was run on the model slope with steering input and without steering inputs. Trajectories of motion were marked during trials and measurements were later taken.

1 Experimental procedure

To facilitate easy measurements of the trajectories of motion of the model tractor and implement, squares of equal dimensions, 50 × 50 cm were drawn on the model slope. Several runs were made to illustrate the agreement with simulation results. Experiments were conducted for different heading angle-slope angle-steer angle combinations. A heading angle of 0° means travelling directly along the slope while a heading angle of 90° means travelling across the slope. Several experiments were run at a constant speed of 0.1 m/s. The model tractor-trailer system was placed along a specific heading angle and points A, B and C were marked during motion, Fig. 9. The coordinates of these points were recorded as A (a, b), B (c, d) and C (e, f). However, we are not interested in the coordinates of these points. The coordinates of interest to us are those of the centres of gravity of both the model tractor and the model trailer. To determine the coordinates of the centre of gravity of the model tractor, the coordinates of point F (l, m) were first determined. Then, from the relationships below the coordinates of the centre of gravity were calculated.

Thus, for heading angle $\psi = 90°$,

$$l = c - l_r \tag{9}$$

$$m = d \tag{10}$$

Therefore, for the tractor

$$g = c - l_r \tag{11}$$

$$h = d + l_4 \tag{12}$$

and

$$D(g, h) = D(c - l_r, d + l_4) \tag{13}$$

for the trailer,

$$i = e \tag{14}$$

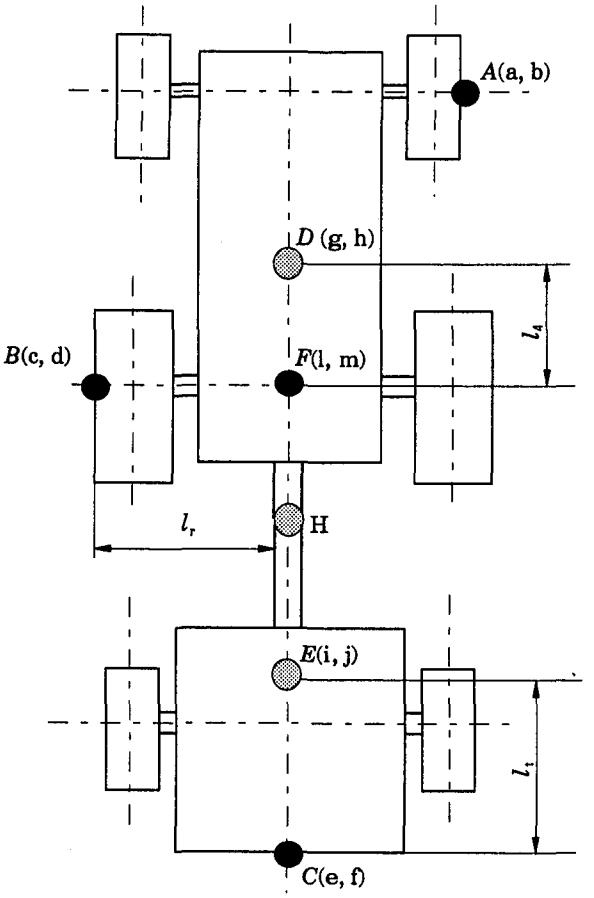

Fig. 9. Measurement of trajectories

$$j = f + l_t \tag{15}$$

$$E(\mathrm{i},\mathrm{j}) = E(\mathrm{e},\mathrm{f} + l_t) \tag{16}$$

Applying the same approach, these coordinates were found to be :

$$D(g, h) = D(c + l_4, d - l_r) \tag{17}$$

$$E(i, j) = E(e + l_t, f) \tag{18}$$

for the situation when the initial heading angle $\psi = 0°$. $l_4 = 0.077$ m as in Table 1 and $l_r = 0.187$ m and $l_t = 0.099$ m. Figure 10 is a photograph of trajectory obtained during experiments. To facilitate direct comparison simulations were conducted using model tractor-trailer parameters.

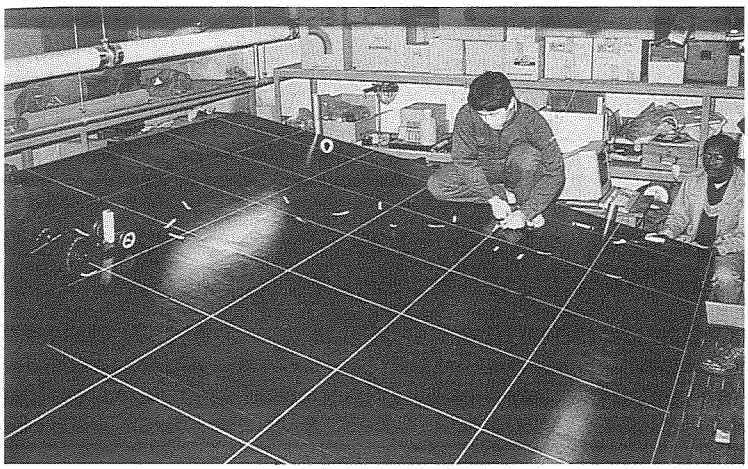

Fig. 10. A photograph of trajectory obtained during experiments

2 Comparison of Experimental and Simulation Results

In almost all the trials made similar trends of agreement were obtained. Due to this only sample results are shown here, Fig. 11 and Fig. 12. These results show that the trajectories of motion are relatively close. What ever little differences exist between these trajectories, I contend this might have resulted

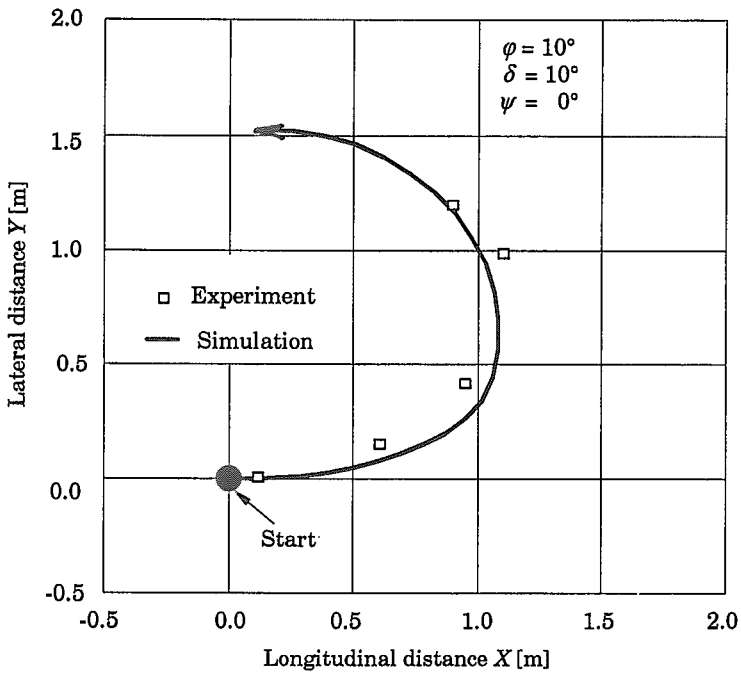

Fig. 11. Trajectory of tractor on a slope of 10°

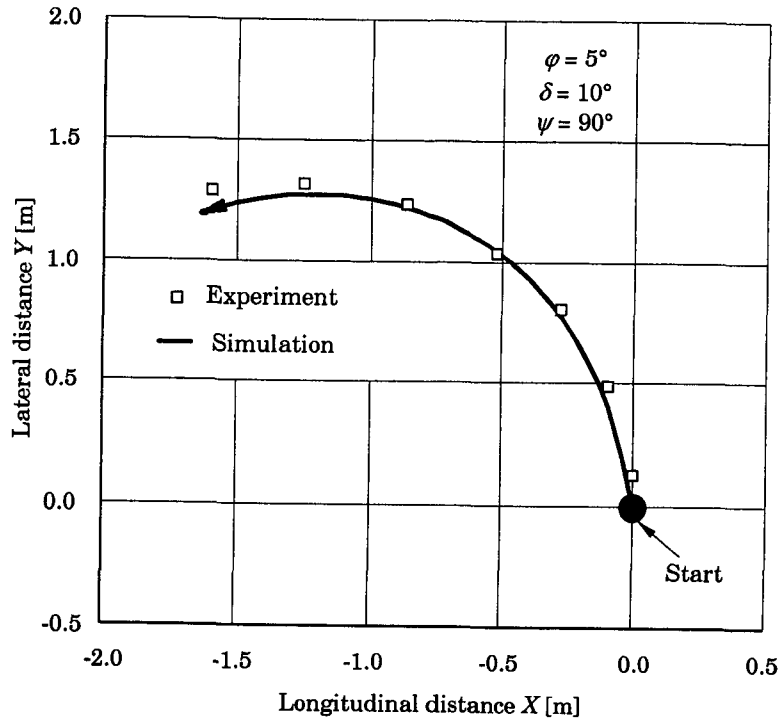

Fig. 12. Trajectory of tractor on a slope of 5°

from technical and human limitations in the determination of the properties of the model tractor. Another reason which could have contributed to these differences is the inability to model the tractor tyres adequately due to financial limitations.

Conclusions

Using the experimental rig described above, a number of validatory experiments have being conducted. The results show a reasonable agreement with the simulation results. Thus, the simulation methods used have been proved to be useful and could therefore be applied investigate new designs of tractors and implements. The methods could also be used to access the dynamics of existing tractor designs.

Acknowledgments

One of the authors (M. G. Y) thanks go to Mr. Makoto Fujiwara, Mr. Yusuke Yasuda, Mr. Yuji Yoshizawa and Mr. Takeshi Yamaguchi who as part of their undergraduate final project rendered assistance at various stages of this study. Among those who have also contributed their time and knowhow to the success of this study are two excellent research engineers of the Department of Agricultural Engineering, Hokkaido University, Mr. Konno Shigeo and Mr. Wakazawa Yukio, who assisted with the fabrication of both the model slope and the model

tractor. To them I say thank you and well-done. My appreciation goes to the Japanese Ministry of Education, Science and Culture for providing funds necessary for this conducting this research, and to the Federal University of Technology, Minna, Nigeria, my place of work, for approving an unusual 4 years of Study Leave/Fellows to me.

References

1) Yisa M. G. and Hideo TERAO : Dynamics of Tractor-implement Combinations on Slopes (Part I) -State-of-the-art-Review-, Journal of the Faculty of Agriculture, Hokkaido University, Vol. **66**. Pt. 2, 240−262, 195

2) Yisa M. G., Hideo TERAO, and Mamoru KUBOTA : Dynamics of Tractor-implement Combinations on Slopes (Part II) -Computer Simulation of Directional Dynamics-, Journal of the Faculty of Agriculture, Hokkaido University, Vol. **66**. Pt. 2, 263−275, 1995

3) Yisa M. G., Hideo TERAO, Noboru NOGUCHI, and Mamoru KUBOTA : Dynamics of Tractor-implement Combinations on Slopes (Part III) -Stability Regions and Optimum Design Parameters-, Journal of the Faculty of Agriculture, Hokkaido University, Vol. **68**. Pt. 1, 1−16, 1997

4) Yisa M. G. : Dynamics of Tractor-implements Combinations on Slopes. Ph. D. Thesis presented to Graduate School of Agriculture, Hokkaido University, Sapporo, Japan, 1996