DEVICES OF SIMPLE PLANKTON APPARATUS

SIGERU MOTODA

Faculty of Fisheries, Hokkaido University

CONTENTS

For sampling the plankton materials in lakes or at sea simple, sometimes hand-made, devices are usually employed, probably because not only of limitation of funds and facilities but also of difficutly in handling of either delicate or clumsy gear on the deck of a ship, especially when it is not well-equipped. It has been the writer's experience that finely constructed instruments which had been designed on land, work exactly in the air as expected, but not rarely do not do so when lowered into the depths of the sea. It is often true that simple gear works most efficiently. It would be better for one to think about sampling instruments while on board ship, perhaps even better in rough weather, than under the roomy and steady circumstances on land.

This report does not attempt to present designs of elaborate instruments of complicated mechanism. The samplers and a few pieces of laboratory apparatus described here are of simple construction, and can be made inexpensively. These devices have come into the writer's mind thinking about instruments for use in various fields of plankton studies which would be most practical in use as well as available for students of plankton under the present circumstances. Some of these designs have been actually constructed and tested at sea, but some models are only in the design stage. It is hoped that the ideas embodied in these devices may be improved by criticism and further actual use.

The writer is greatly indebted to Captain T. Fujii and crew members of the Training Ship "Oshoro Maru" for their help in the testing of instruments at sea. He also appreciates the help given by Dr. T. Kawamura and students of the University who were on board during the tests. Thanks are also due to Prof. Ki-ichiro Kobayashi for his kind advices given to the writer concerning the arrangement of figures in this report. The construction of models 17 and 18 by Rigosha Co., Ltd. free of charge is greatly appreciated.

I. DIVIDED VERTICAL HAUL WITH NET

At present the plankton net offers the simplest method for sampling the plankton, especially for medium-sized zooplankton. Inexactness of quantitative sampling with a net has been overcome to a certain degree through the use of an appropriate flow-meter.

In various studies on plankton, both biological and oceanographical, it is often desired that plankton samples be taken at various depths just as are the hydrographic measurements. During the vertical haul of a plankton net the contamination of materials from upper zones is prevented by closing the net after it has been hauled through the desired water layer. In most oceanic cruises, the hydrographic cast precedes the biological sampling, and it usually happens that there is no sufficient time to do the plankton sampling by making repeated vertical hauls from various depths. It is thus necessary to save time by sampling the plankton from various zones in a single haul. Hart's net[1] is one of the designs for this purpose.

Model 1. Twin net with semi-circular openings

(半月口双子ネット)

(Plate I, Fig. 17)

This is designed to sample the small-sized zooplankton from different vertical zones in a single haul. Two small nets of which the mouths are semi-circular are set on the metal frame. The frame is composed of top and bottom circular discs which are connected by four supporting rods with each other. Through the center of each disc the wire cable passes. Five or six such net assemblies will be prepared and each assembly is successively slid down along the wire cable while the cable is retrieved. As a result nets on the second assembly close the nets on first assembly, so that the latters no longer catch plankton. This design was already reported,[2] but has not yet been actually constructed.

Model 2. Continuous vertical sampler

(連続垂直採集器)

(Plate I, Fig. 18)

For finding out the relationship between abundance of small-sized plankton organisms and physical and chemical elements of the sea water through vertical range in detail, it is desirable to know by means of continuous sampling how plankton are distributed through the vertical column of water. The model 2 sampler is designed after Hardy's idea on the Continuous Plankton Recorder.[3-6]

A propeller mounted in the under part of the instrument is driven by the water current created by hauling of the instrument, and the revolution of the propeller, in turn, drives the spool inside with the result of continuous rolling of the silk gauze band wound on the spool. From the second spool which is located on the top left (in Fig. 18) another silk gauze band is drawn out with rolling. Plankton organisms entering from the top mouth are retained on the silk gauze when they pass across the rectangular path, and in the next moment, they are tightly gripped between two silk gauzes as they are transferred to the left (in Fig. 18) with the movement of the gauze. After hauling the instrument on deck the silk gauze band is unrolled to observe what and how many organisms have been taken at various depths through the vertical column of water. A small net of ordinary type which is mounted to the right side (in Fig. 18) collects the plankton through a column without dividing by zones. The quantity of water which had passed through the net will be known by means of a flow-meter mounted below the net.

Model 3. Twin net with bent lid

(曲蓋付双子ネット)

(Plate I, Fig. 19)

This model samples the plankton from any desired depth to the surface dividing them into two parts in a single haul. By lowering the messenger weight the bent lid closes the net on one side, while opening the net on the other side.

Model 4. Twin net for collecting in any two zones of water

(自由二層採集用双子ネット)

(Plate I, Fig. 20)

This model is slightly modified from model 3 in that the last sampling can be stopped beneath the surface. When the first meassenger hits the first trigger, one lid is dropped and the other lid is raised. The spring stretched between the lid and net frame at left side (in Fig. 20) is powerful enough to raise the other lid at right side (in Fig. 20) which is connected to the left lid by means of a metal chain. At the same time as this action the second trigger on the right lid comes into contact with the wire cable. The second messenger, which will be the same size as the first messenger, releases the clamp of the lid of the right net, and closes it.

Model 5. Four square net assembly

(角型四ネット組合せ)

(Plate I, Fig. 21)

This is constructed on the same principle as model 3, as it is essentially two model 3's put together. The first messenger closes the first net and at the same time it opens the second net. The second messenger, which has a size to cover the first messenger, closes the second net and opens the third net. The third messenger, which is the largest, closes the third net and opens the fourth net. To make the messenger hit against the triggers correctly, they are made to pass over a rigid rod which extends above the triggers.

Model 6. Double purse net

(二層巾着ネット)

(Plate II, Fig. 22)

This is designed for the same purpose of sampling as is model 3, but a modification of the design makes it possible to enlarge the size of the net. One of two purse nets is closed

and the other opened by the tripping weight which is released by impact of the messenger. A pretty large-sized net can be used.

Model 7. Double closing net

(二層閉鎖ネット)

(Plate II, Fig. 23)

The impact of the messenger releases a line by which the open net is throttled and at the same time a throttled net is opened. Construction is very simple and can be adopted to a net of considerable size. The throttling line must be strong enough to suspend the entire apparatus including a heavy weight.

II. HORIZONTAL OR OBLIQUE HAUL IN MID-WATER LEVELS

It is felt that for the study of vertical distribution of plankton, especially macroplankton, in detail, echelon vertical hauls are insufficient to yield useful data. The collection must be done by towing a series of nets horizontally or obliquely at different levels of water. The elaborate work performed by F. S. Russell on the problems of vertical distribution of macroplankton in the Plymouth area was carried out by such a method.[7]

Model 8. Horizontal net directly attached on the cable

(直結式水平ネット)

(Plate II, Figs. 24–26)

The simplest method of horizontal tow with a net through subsurface levels of water employs a net without bridles; the net is attached to the cable at both the upper and lower portions of the brass ring which encircles the mouth of the net. A series of such nets set on a single line is towed horizontally or obliquely through several desired zones. The line must be kept nearly vertical by means of a heavy weight attached to the lower end of the line. The contamination of samples from other levels of the water, which may be introduced when the nets are lowered or raised, is reduced to a great degree in this method. When the collections are limited to a shallow zone of water, say 30 meters deep or so, and when the water is calm, such a method seems to be very practical and particularly satisfactory.[8-11] The nets should rotate freely around the cable, otherwise the turning back of the twist of the cable line (often happens when a heavy weight is suspended) will result in deviation in the direction of the facing of the mouth of the net. In employing the design of Nishimura[12] (Fig. 26), it seems to be necessary to put a swivel at each connection point between the net ring and the cable.

If the nets are towed with too much speed, the towing cable line carrying the nets

will be suspended obliquely, thus the vertical cross section of the mouth of the net is much reduced. Such a condition occurs also when the ship is drifted by violent wind. This is often a problem at sea.

Model 9. Horizontal net with sliding ring

(滑り輪付水平ネット)

(Figs. 1–3, Plate III, Figs. 27–29)

To keep the mouth of such a net (model 8) vertical during horizontal tow regardless of the inclination of the towing cable, this model is designed, which automatically compensates

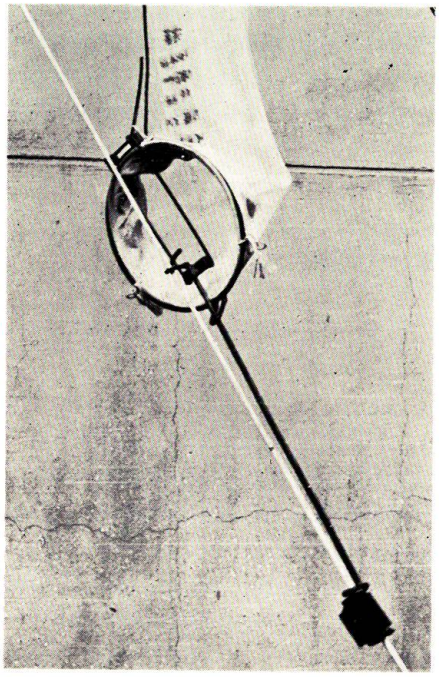

Fig. 1

Figs. 1-3. Horizontal net with sliding ring (model 9). 1. In lowering position. 2. In horizontal towing position. 3. In raising position.

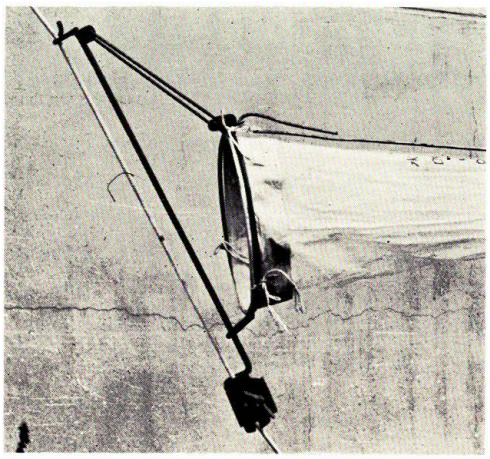

Fig. 2

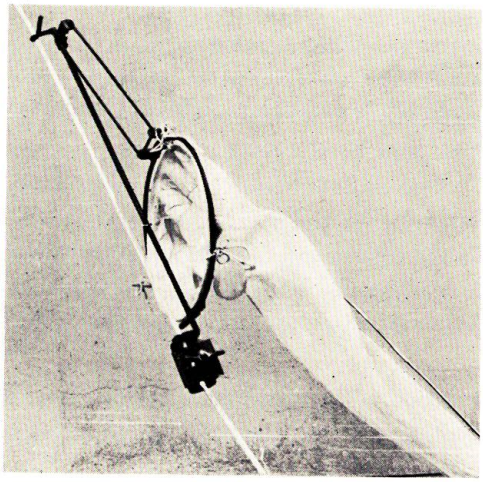

Fig. 3

for wire angle. The mouth ring of the net is mounted on a supporting rod which lies parallel to the cable, resting on a wire clamp beneath. This rod is able to rotate freely around the cable. The upper portion of the mouth ring is connected to the upper portion of the rod by means of paired hinged arms. The lower portion of the mouth ring has an eye by which the ring can slide up and down freely along the underhalf of the rod. When the cable is run out from deck, the mouth ring is raised until it lies parallel to the cable due to the current created by lowering the net into the depth, while in retrieving the towing cable back to deck the mouth ring is lowered until it becomes parallel to the cable. Thus, during the lowering and raising of the net, if the ship's movement (or current movement) is not large, contamination of materials from other zones will be much reduced compared with the case of the net having ordinary bridles. When towed horizontally the wire cable will be suspended obliquely, but the mouth of the net will face to the current at right angles, since the lower portion of the mouth ring slides along the rod until the net receives the largest resistance of water current.

The performance of this type of net was tested off south-western coast of Hokkaido in the Japan Sea on May 25 and August, 31, 1959. The first experiment was made by use of the procedure that the cable carrying a net was hauled immediately after it had run out 800 meters. The catch was almost negligible in this sampling, showing that the contamination of materials during the lowering and raising of the net had not occurred. In the second experiment nine nets were attached on the cable at 1 m, 50 m, 100 m, 200 m, 300 m, 400 m, 500 m, 700 m, and 900 m, and towed horizontally by drifting the ship for one hour. The action of the nets seemed to be satisfactory. The wire clamp of simple construction shown in Fig. 27 was proved to be easy to handle.

Model 10. Small horizontal net with rotary mouth ring

(口輪廻転式水平ネット)

(Plate III, Figs. 30–32)

A horizontal circular plate made of metal protrudes at right angles from a rod which is attached to the towing cable in parallel. The mouth ring of a small net (13 cm in diameter at the mouth) is hinged at both horizontal margins to the circular plate. There is a heavy balance weight which protrudes from the lower portion of the rod to the opposite side of the net. While the net is being lowered, the net end is forced to take an upward direction, resulting in the closing of the mouth of the net. During raising of the net, the net end is directed downward, the mouth of the net being closed. While the net is towed horizontally the mouth of the net faces in vertical to the current, leaving unclosed space. That space will be lessened when the towing cable is inclined, but still allows the plankton to enter into the net. The limitation of this type is in its small size of the net and, when towed horizontally, narrowness of the space between the mouth ring and circular plate.

Model 11. Triangular mid-water net

(三角中層ネット)

(Plate III, Fig. 33)

For sampling agile plankton animals from deep water it is necessary to employ a horizontal or oblique tow with a net of considerable size for a certain duration of time. The great distance through which the net has to pass in lowering and raising makes the sampling inaccurate because of contamination of materials which happens in these procedures.

Tucker's mid-water net[13] is a very fine design for collecting in a simple manner the fish larvae and other macroplankton from mid-layer regions of the sea with negligible contamination of the sample from the other levels. Model 11 is designed using his idea, but slightly modifying it. To keep the mouth of Tucker's mid-water net in a vertical position while it is being towed horizontally, a very heavy weight must be hung under the mouth of the net. Construction of a net having reversed triangular mouth as in Fig. 33 will decrease the resistance of the underside of the net to the water current which makes it easy to keep the mouth of the net near vertical position. The upper side of the triangle at the mouth of the net is made of a strong steel rod or pipe, and the other two sides are made of chains. Bridles connected to the upper rod are also made of chains. This construction makes the net easy to handle on deck. A long rod (preferably made of bamboo) is attached between the center of the steel rod and net end to prevent the body of the net from entangling with the towing cable during lowering.

This type of net was constructed and used in September 1959 during the carrying on of the program for deep sea research on the Japan Trench using the "Ryofu Maru" of the Meteorological Agency. According to the personal communication of Mr. Y. Komaki who was in charge of operation of the plankton sampling on board this ship, a big tapered wire carrying a triangular net was run out as long as 6000 meters at a station where the sea depth is 6500 meters, and again as long as 3764 meters at another station where the depth is 3800 meters. In both cases the sampling was successful. The net employed was of smaller size than that shown in Fig. 33. The triangular mouth of the net was 150 cm long at one side. The net was made of coarse nylon cloth in the anterior 300 cm and nylon bolting cloth NG 54 in the posterior 300 cm. A lead weight of 50 kg was suspended beneath the net by connection with 150 cm steel chain. In towing at 0.5–1 knots it was felt that a more heavy weight is needed to keep the mouth of the net in vertical position.

III. MECHANISM OF OPENING AND RECLOSING OF THE NET

To catch the zooplankton by horizontal or oblique tow only in the mid-water regions, the net must be closed until it reaches a desired depth, and after having been towed for a certain distance in open condition, it must be closed again before being hauled on deck.

There have been many devices constructed for this purpose.[14-28] It is a rather difficult thing to make reliable releasing of the clamps on the mechanism for opening and reclosing the net at a great depth by means of sliding messenger weight. The workers on deck have no way to know whether the first and second clamps on the mechanism are released properly or not. For this reason Van Cleve[30] constructed an electrical closing mechanism to overcome the inexactness of releasing of an ordinary mechanism, but it has not been widely used because of limitation due to the necessity of the electrical cord. It seems that at present Leavitt's[23,29] and Discovery[17] types of double releasing mechanisms are most widely used for deep oblique tow with large nets. In usual double releasing mechanism the second messenger is constructed of larger size than the first messenger to overlap the latter. Harvey's double releasing gear[20] is equipped with a spring system of appropriate strength by means of which two equal-sized messenger weights can be used.

Model 12. Double releasing mechanism with dissolving substance

(溶解式二重放索器)

(Figs. 4–6, Plate IV, Figs. 34–40)

This model is composed of a cylinder and follower piston. Some kind of dissolving substance (hard candy balls can be used) is put inside of the cylinder. After a certain length of time which is sufficiently long for the closed net to be positioned in the desired depth, the partial dissolution of the candy balls permits the first releasing arm to open which results in the opening of the net. Further dissolution of the balls permits the second arm to open which results in the reclosing of the net. Thus the open net is towed in the mid-water region for the time from the first releasing to the second releasing. In the test at sea this mechanism worked as expected, although it was difficult to anticipate the exact time required for dissolution of the balls. A cable connector shown in Fig. 39 makes easier the attaching and detaching the mechanism from the wire cable.

Model 13. Double releasing mechanism with long rotary neck

(長首式二重放索器)

(Plate V, Figs. 41–42)

The design of model 13 is different from those which have been hitherto reported. In this model the second trigger is located apart from the wire cable at first, but when the first messenger releases the first clamp, the second trigger comes into contact with wire cable. The first and second messengers can be constructed of the same size and weight. This mechnaism is only in the design stage.

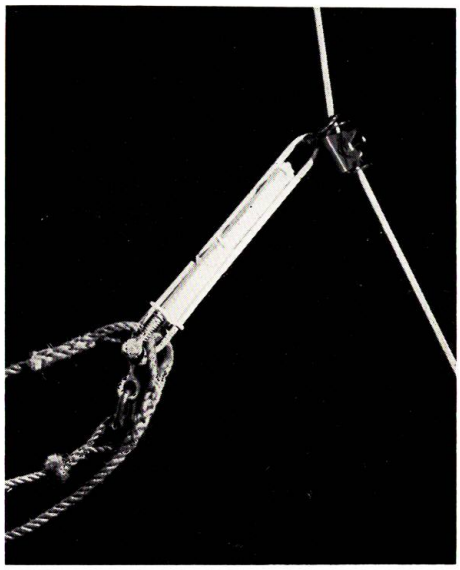

Fig. 4

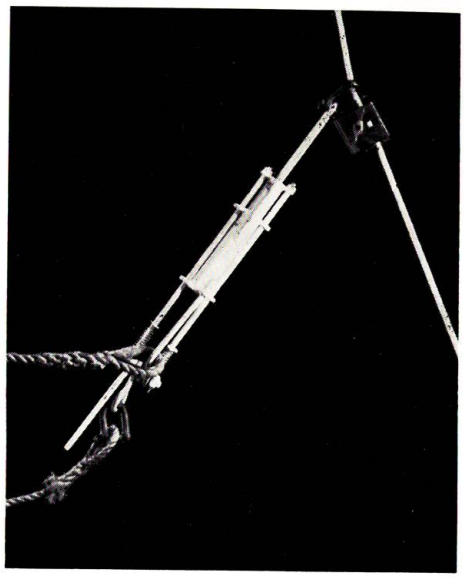

Fig. 5

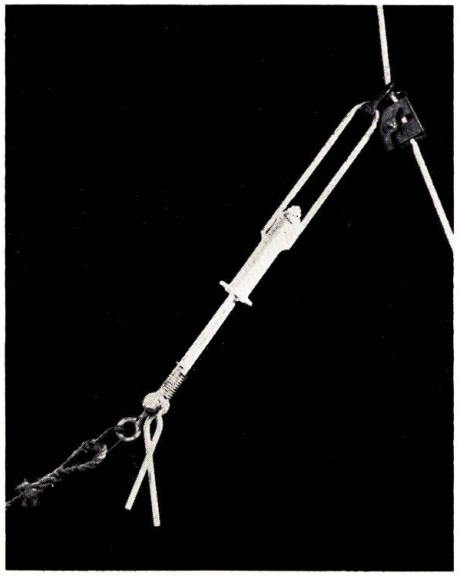

Fig. 6

Figs. 4–6. Double releasing mechanism with dissolving substance (model 12). 4. Before releasing first and second arms (net is closed). 5. First arm is released (net is opened). 6. Second arm is released (net is reclosed).

Model 14. Double releasing mechanism with horizontal bar

(横棒式二重放索器)

(Fig. 7, Plate V, Figs. 43–46)

This model is designed for use on a wire of considerable thickness, e.g., 23 mm (in diameter) trawl warp or oceanographic big tapered wire in which the thickness is gradually lessened toward the end of the cable. The jar-shaped second messenger when lowered, overlaps the first messenger together with the upper part of the body of the instrument. The underside of the second messenger pushes down the horizontal bar (second trigger) which extends at both sides of the instrument. The lowering of the horizontal bar results in release of the second clamp. The first messenger never touches the second trigger in any way, so that there is no possibility of releasing the second clamp when the first messenger is lowered. The center hole of both messenger weights will be made to be large enough to pass over the wire cable even if there should be an inconstancy in thickness.

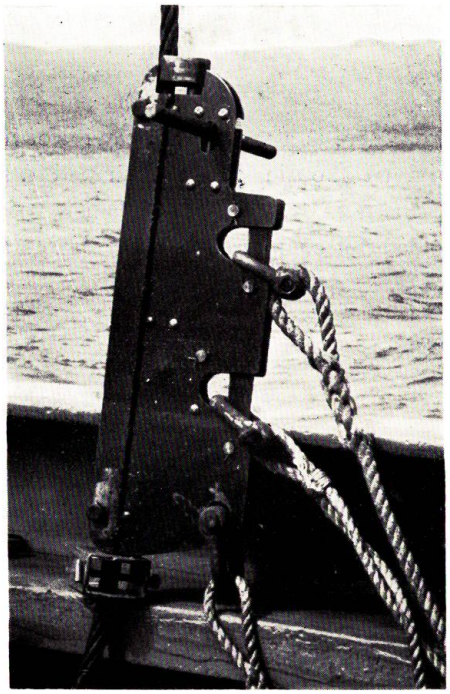

Fig. 7. Double releasing mechanism with horizontal bar (model 14).

IV. UNDERWAY SAMPLER

Many types of underway plankton samplers have been hitherto reported, such as Hensen's basket net and horizontal cylinder net;[31–34] Borgert's tow net;[31–33] Apstein's plankton tube;[31–33] Monti's collector;[34] Hardy's plankton indicator[35–37] and continuous plankton recorder;[3–6] Sheard's high-speed tow net;[38–39] Tamura's sampler;[40] Tester & Stevenson's metal net;[41] Arnold's high-speed plankton sampler;[42] Gehringer's all-metal plankton sampler;[43] Motoda's high-speed successive plankton sampler[44] and underway plankton catcher;[45] Ahlstrom, Isaacs, Thrailkill & Kidd's high-speed plankton sampler;[46] Miller's high-speed sampler;[47] etc. The small type Hardy Plankton Indicator[37] having a small conical net is apparently most practical to check the plankton distribution simply at any one position in the ocean while the ship is underway. The Hardy Continuous Plankton Recorder[3–6] is an ingenious and excellent sampler for use of continuous observation on the distribution of plankton over wide areas of the ocean. It has been extensively used around

Great Britain and also to a certain extent in the western Atlantic off the northern part of the United States. All-metal Gulf-III sampler[43] (so-called tin-tow net) is being used in the United States and also in England. The big size of this sampler (in the original model, the case is 224 cm long, 49 cm in diameter of cylindrical part, and 41 cm in diameter of mouth opening) makes it most efficient for collecting the agile large plankton animals which play an important role in the fisheries problem.

Model 15. High-speed tow net with heavy head

(頭棒付高速ネット)

(Fig. 8, Plate VI, Figs. 47–49)

There is a very clever device of high-speed tow net.[38,39] In this device the tail end of a net of ordinary conical shape is drawn up to the center of the mouth through the inside of the net. When towed at high speed the filtering capactiy is greatly increased in this folded net compared with the ordinarily stretched long net, and, in addition, the frontal

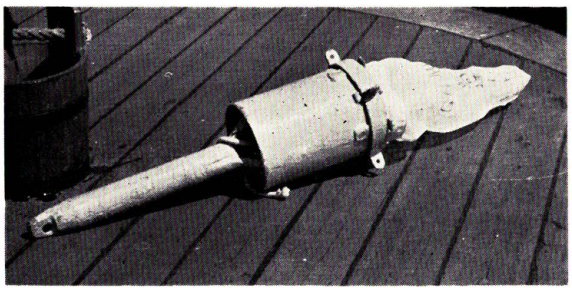

Fig. 8. High-speed tow net with heavy head (model 15).

wave occurring in front of the mouth of the net is much reduced. This is an adoption of Bernoulli's principle. The sampling with this type of net was reported to be successful at 5 knots (61 cm mouth diameter)[38] and 7 knots (46 cm mouth diameter).[39]

The model 15 sampler is designed under the same principle. Instead of ordinary bridles a heavy metal rod extends from the center of the short metal cylinder which is followed by the net. (This part was made by reconstruction of the underway plankton catcher III[45]). The area of mouth opening excluding the part of central rod measures 44 cm^2. The rod and mouth cylinder altogether weigh 2.4 kg. Experiment at sea proved that by running out of Manila rope of 18.2 mm diameter far long as 25 meters length from deck to the sampler, the model 15 equipped with a net of bolting silk GG 40, 0.47 mm mesh size, could be towed at 8.5 knots through the surface water without jumping on the sea surface. The strain was 21 kg. When towed with a depressor, the anlge of rope was 75 degrees and the strain was more than 100 kg.

Model 16. Simple underway plankton catcher IV & V

(簡易航走採集器 IV 型及V型)

(Figs. 9, 10, Plate VI, Figs. 50–54)

The numbering of this model succeeds after the numbers of the previously reported three models of underway plankton catcher.[45] In the original design of underway plankton catcher I and II, the head piece is conical shape with two side openings, and the towing cable is attached at the tip of the head. This construction is intended to reduce the strain when the instrument is towed at high speed for the sake of making manual handling easier. However, it was felt that the instrument, when towed, was forced to rotate, resulting, in turn, in twisting of the towing cable, sometimes resulting in its breaking. In the model 16 the place of attachment of towing cable is changed to the upper side of the anterior portion of the head piece, like in the Hardy Plankton Indicator, and a wing underside of the posterior portion of the cylinder is removed. The design is recommended for its most simple and inexpensive construction as well as for easy handling in setting and removing the net inside of the cylinder. In catcher IV (Figs. 9, 10, Pl. VI, Figs. 50–52) the diameter is decided to fit the size of the Rigosha small type flow-meter[48] which is set inside of the inner cylinder. The iron cast head piece is pierced by a hole, 3 cm in diameter, which allows the water to pass through. Inside the cylinder a smaller inner cylinder is inserted which supports a small conical net (made of bolting cloth GG 56, 0.33 mm mesh size) at the anterior end and contains a flow-meter in the posterior portion. This inner cylinder is fixed by means of a pin which passes transversely through the outer cylinder near the end opening, so that attaching and detaching of the inner cylinder is very easy. The whole assemblage weighs 4.4 kg. This instrument can be towed at high speed through the surface water without jumping on the sea surface. The tow with a single sampler at any desired depth or simultaneous tow with several samplers through several zones can be made by the methods illustrated in Figs. 53 and 54. The test tow using a Manila rope (18.2 mm in diameter) of 25 meters length from deck to the sampler showed that, in the surface tow at 7.5 knots, the strain was 12 kg and that in the subsurface tow by means of a depressor at the same speed the strain increased to more than 100 kg. In both

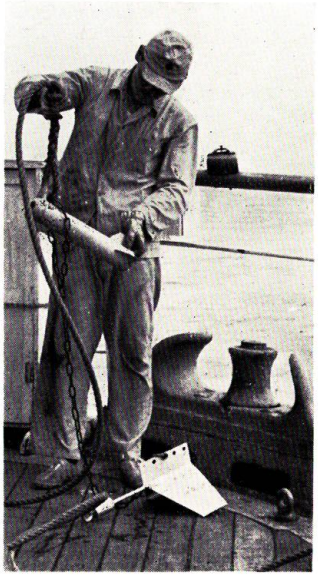

Fig. 9. Simple underway plankton catcher IV (model 16). A depressor is laid on deck.

cases the sampler was very stable.

If the ship is large enough to handle the sampler on deck, and a powerful winch is equipped, the larger size of sampler, better. In catcher V (Fig. 10) the case including the head piece is 100 cm long and 15 cm in diameter. The iron cast head piece which itself is 14 cm long is pierced by a water tunnel, 7 cm in diameter. The tripod frame which is inserted inside the case from the end opening, carries a net and a flow-meter. The whole assemblage weighs 15 kg.

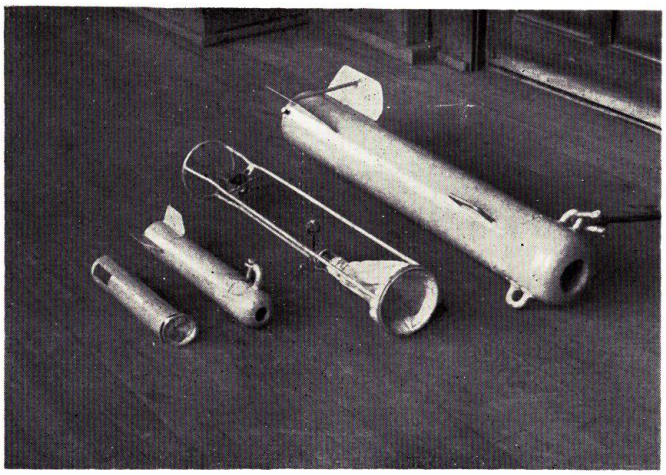

Fig. 10. Simple underway plankton catcher IV (left) and V (right) (model 16). Inner cylinder of catcher IV and inner tripod supporter of catcher V which carry a net and a flow-meter are drawn out from the case.

Model 17. Simple underway plankton catcher VI with outside frame

(外枠付簡易航走採集器 VI 型)

(Plate VI, Figs. 55–57)

A rotary rectangular frame is attached outside the cylindrical case to which a towing cable is connected at its upper ring and a depressor cable at its lower ring. This permits the sampler to keep horizontal position irrespective of inclination of the towing cable. The whole assemblage weighs 9.4 kg. In the test at sea this model was towed at 8 knots using a Manila rope (18.2 mm in diameter). The instrument ran stably and the strain was more than 100 kg.

Model 18. Multiple net underway sampler

(多網式航走採集器)

(Figs. 11, 12, Plate VII, Figs. 58-60)

The instrument is mounted in a long rectangular case having both ends tapering. Ten small nets, 3.7 cm in diameter, are arranged on a narrow metal plate which can be easily removed from the inside of the case. This plate pushes up a flexible metal band which moves forward with the rotation of reels. Anterior opening of the case which admits the water is 2.5 cm square. The water entering this opening passes along the water tunnel upside, and reaches the intake cap which is fixed on the flexible metal band, then turns into net. The instrument is towed at high speed by means of a thick cable, and, in addition,

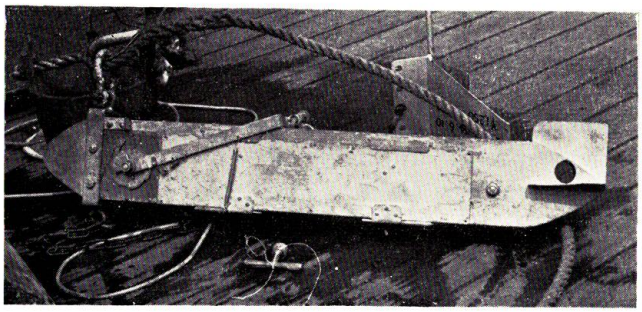

Fig 11

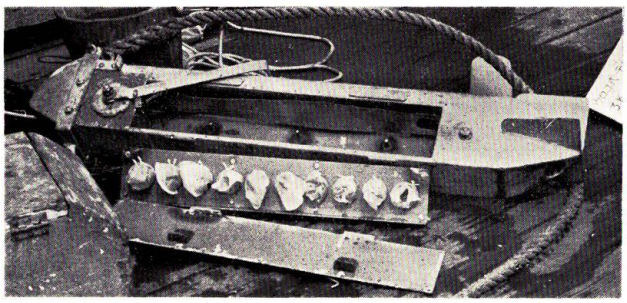

Fig. 12

Figs. 11-12. Multiple net underway sampler (model 18). 11. Outside view. 12. Narrow metal plate carrying ten small nets is removed from the case.

an accessory line (also thick cable) is connected from the upper ring of the rectangular frame to deck, but is not tensioned. By pulling the accessory line from deck (actually by slacking the main towing cable), the rectangular frame is pulled forward with the result that the rotation of the anterior reel is caused sufficient to shift the intake cap on the

flexible metal band from one net to another net. Successive pulling the accessory line (actually successive slacking of the towing cable and accessory line alternately) at every desired distance of the tow enables the sampling of the plankton into different nets successively. The tow cannot be adopted for a long distance beyond the time of decaying of the organisms sampled. The whole assemblage weighs 14.1 kg. In the test tow carried out at sea, it was found that more tight contact between the metal band and the narrow plate carrying the nets is needed.

Model 19. Multiple net underway sampler with storing tank

(貯蔵タンク付多網式航走採集器)

(Plate VII, Figs. 61–65)

In this model instead of shifting of the location of the water intake cap in model 18, the nets themselves move with the rotation of the reel. Fitfteen small conical nets, 5 cm in diameter at the mouth and 5 cm deep, are arranged on the flexible metal band which is rolled between fore- and rear-reels. The net is turned over inside out at first, but when it comes under the inner rectangular opening of the water tunnel, which is 5 cm wide and 8 cm long, i.e., longer than the diameter of the net, it is forced back inside in due to water current. This device is for the purpose of preventing contamination of samples in the net before it is connected to the water tunnel. The net, after being connected to the water tunnel for desired duration of time, is pushed into the formalin tank when the accessory line is pulled. The net passes through the narrow space between the upper and lower rubber flaps at the entrance to the formalin tank. If one net samples the plankton for 20 miles, the total collection will cover 300 miles. Pulling system for shifting the net can be replaced by the propeller and gear system if automatic successive sampling is desired. This instrument is not yet actually constructed.

V. PLANKTON SUBSAMPLING APPARATUS

When the sample is too big, it is necessary to take only a known fraction of the sample for counting the number of individuals in it. Several types of plankton sample fractioning apparatus have been devised. They are Hensen's shaking flask with pestle pipette ;[31,32] Gibbon's cylinder with multiple septa ;[49] Harvey's stirring cylinder and dip stick ;[22] Wiborg's whirling vessel ;[50] Kott's modified whirling vessel ;[51] Folsom plankton sample splitter ;[52] etc.

Model 20. Plankton sample splitting box

(プランクトン標本分割箱)

(Figs. 13–15, Plate VIII, Figs. 66–68)

This model is a plastic box having a longitudinal septum inside. The septum is set on the center line extending through the half of the box and this is succeeded by a low ridge, 5 mm in height, on the bottom of the other half. The upper plate covers the half of the box on the portion of septum except for a rectangular opening at one corner. The method of splitting is : 1) Tilt the box to the open portion (portion without cover) on the edge of table, pushing the base piece of the box against the edge of the table ; 2) Stir sample with a thin stick; 3) Tilt the box to the opposite side. Sample is split into two subsamples by the septum; 4) Turn the box over to pour out one subsample into a beaker through the open corner of the cover. The other subsample does not flow out because prevented by the cover ; 5) Return the box to normal position; 6) Tilt the box to the covered portion and put in rinse water with a pipette to wash down the adhering organisms to the covered portion. The low ridge on the bottom plate prevents the mixing of organisms in two split parts; 7) Turn the box over to pour out the washed organisms into the same beaker; 8) Repeat the procedure of steps 5–7. The splitting box of size given in Figs. 66 and 67 can be used for a sample as large as 1500 cc.

Model 21. Plankton sample splitting cylinder

(プランクトン標本分割円筒)

(Plate VIII, Figs. 69–71)

A plastic cylinder, 9 cm in outer diameter and 15 cm in height, is fixed on a square plastic base plate, 10 cm square. In the cylinder there is a perpendicular septum dividing the interior equally. This perpendicular septum is in parallel to two sides of the square base plate. A quarter of the top of the cylinder is covered by a plate. In tilting the cylinder septum up, the sample is stirred in the lower portion of the cylinder, and then the cylinder is tilted to opposite side. The sample is thus split into two halves by the septum. By tilting the cylinder farther the one of the split samples is poured out from the cylinder into a beaker. Adhering specimens should be rinsed down by adding water with a pipette. This splitter is used for a small sample, less than 150 cc of water containing the organisms.

VI. PLANKTON SAMPLE FILTERING APPARATUS

For rapid and accurate measurement of displacement volume of a plankton sample, various filtering apparatuses have been devised.[53-57] In processing the samples brought from an ocean cruise it is often necessary to deal with hundreds of samples for such processing.

Fig. 13

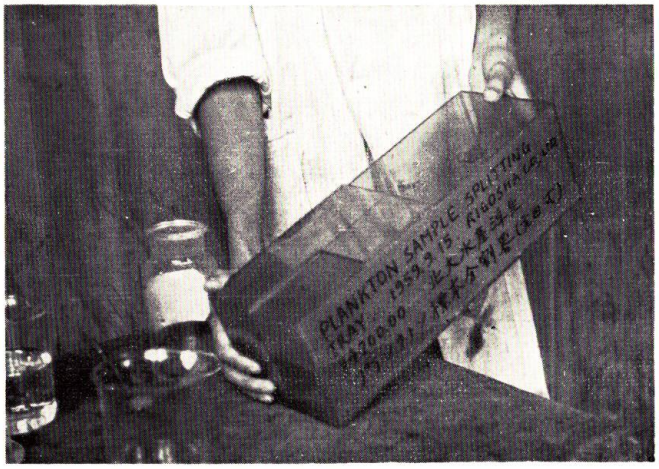

Fig. 14

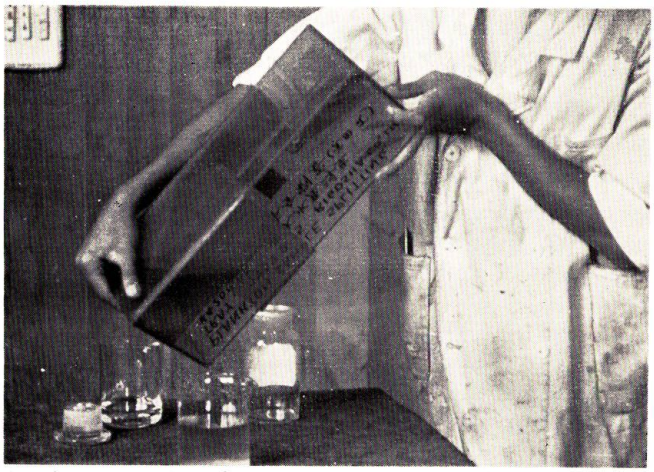

Fig. 15

Figs. 13–15. Plankton sample splitting box (model 20). 13. The box is tilted to the open portion, and the sample is stirred with a thin stick. 14. The box is tilted to the covered portion. Sample is split into two subsamples by the septum. 15. The box is turned over, and one subsample is poured into the beaker.

Some of them are fairly big, and sometimes contain many phytoplankton which are not easily filtered by ordinary gravity filtering method. It is hoped to devise a tool for such measurement by means of aspiration and adequate filtering apparatus.

Model 22. Plankton sample aspiration filtering apparatus

(プランクトン標本吸引濾過装置)

(Fig. 16, Plate VIII, Figs. 72, 73)

This apparatus is composed of upper and lower funnels (made of metal or plastic); cylindrical aspiration chamber (made of transparent plastic); and a receptor of filtered water (glassware). The assemblage of these parts is kept in place on a metal tripod supporter (52 cm in height). Beneath the receptor is placed a graduated glass cylinder, 200 cc in capacity. A glass filter or paper filter or bolting cloth is used for filtration according to the purpose of the study. The filter is tightly gripped between the upper and lower funnels by means of three clips at the margin of the rims of the funnels. If the paper filter is used, glass filter or other appropriate sieve should be put under the paper filter. A narrow metal tube is fixed into the aspiration chamber from the thick rubber plate underside, and a rubber tube is connected from the bottom of this metal tube to the electromotive aspirator or to the vacuum aspirator or to the simple aspirating apparatus employed by Hart.[1]

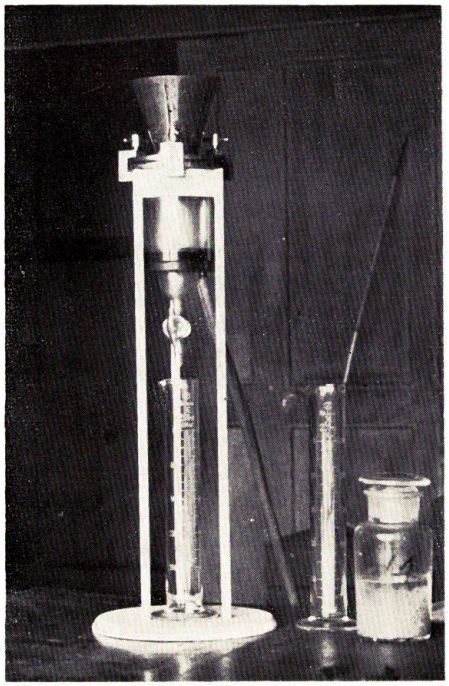

Fig. 16. Assemblage of plankton sample aspiration filtering apparatus (model 22).

The sample contained in a known volume of water (less than 200 cc) is poured into the upper funnel and the aspiration is set going. Organisms contained in the sample water are retained on the filter and the water passing the filter drops into the receptor. After switching off the aspirator, water concentrated in the receptor is let down into the graduated cylinder by opening the stopcock of the receptor. The difference between the volume of the original sample water and the water in the graduated cylinder is the displacement volume of plankton sample. Using fine bolting cloth, XX 13, 0.1 mm mesh size, as a filter, samples of ordinary size, say 15 cc of displacement volume, can be measured within a few

minutes when they include mainly copepods. Even the samples containing phytoplankton, as much as 15 cc of displacement volume, are filtered within ten minutes. Remaining organisms on the filter are almost drained forming a thick circular block like a cake. Their weight represents the wet weight of the samples.

REFERENCES

1) Hart, E.G. (1935). Some devices for the manipulation of marine plankton collection on board ship. *Jour. du Cons.* **10** (2), 173–179.
2) Motoda, S. (1954). On plankton research in Japan with annotated bibliography. *Indo-Pacific Fisheries Council. Symposium on Marine and Fresh-water Plankton in the Indo-Pacific*, 1–14.
3) Hardy, A.C. (1936). The continuous plankton recorder: A new method of survey. *Rapp. Proc.-Verb. Reunions* (95), 36–47.
4) ——— (1936). The continuous plankton recorder. *Discovery Rep.* **11**, 457–510.
5) ——— (1939). Ecological investigations with the continuous plankton recorder. *Hull Bull. Mar. Ecol.* **1** (1), 1–57.
6) ——— (1944). Explanation: A non-technical account of contents of the volume for the general reader, intended to show the bearing of the work upon the future welfare of the fishing industry. *Ibid.* 1, vii-xlii.
7) Russell, F.S. (1934). The vertical distribution of marine macroplankton. VII. Some observations on the vertical distribution of *Calanus finmarchicus* in relation to light intensity. *Jour. Mar. Biol. Ass.* **19** (2), 569–584.
8) Motoda, S. & M. Anraku (1951). An observation on the vertical distribution of plankton at Ishikari Bay, Hokkaido. *Jour. Oceanogr. Soc. Japan* **6** (4), 194–201. (in Japanese).
9) ——— & ——— (1952). Observations on the plankton of Funka Bay, Hokkaido. I. Vertical distribution of plankton at the mouth of the bay in August 1950. *Bull. Hokkaido Regional Fish. Res. Lab.* (5), 17–20.
10) ——— (1953). Observations on diurnal migration of plankton crustaceans in Lakes Shikotsu, Hokkaido, and Tsugarujuni, Aomori, and some experiments on photo- and geotropism. *Mem. Fac. Fish., Hokkaido Univ.* **1** (1), 1–56.
11) ——— & M. Anraku (1955). Marine plankton copepods from Hachijo Island, Idzu Is., with special reference to their vertical distribution. *Rec. Oceanogr. Wks. in Japan*, N.S. **2** (1), 210–214.
12) Nishimura, S. (1957). Vertical distribution of the floating eggs of *Maurolicus japonicus* Ishikawa, a gonostomatid fish, in the sea. *Ann. Rep. Japan Sea Regional Fish. Res. Lab.* (3), 13–22.
13) Tucker, G. H. (1951). Relation of fishes and other organisms to the scattering of underwater sound. *Jour. Mar. Res.* **10** (2), 215–238.
14) Bigelow, H.B. (1912). A new closing-net for horizontal use, with a suggested method of testing the catenary in fast towing. *Int. Rev. ges. Hydrob. u. Hydrogr.* **5**, 576–580.
15) Kofoid, C.A. (1912). A new horizontal self-closing plankton net. *Ibid.* **5**, 91–92.
16) Arwidsson, I. (1913). Ein schliessbares Planktonnetz zum Horizontalfang. *Ibid.* **6**, 63–65.
17) Kemp, S. & A.C. Hardy (1929). The Discovery Investigations, objects, equipment and methods. Part II. The ships, their equipment and the methods used in research. *Discovery Rep.* **1**, 151–222.
18) Jenkin, P.M. (1931). A double releasing mechanism and other apparatus for quantitative plankton collecting. *Int. Rev. ges. Hydrob. u. Hydrogr.* **25**, 33–45.
19) Clarke, G.L. (1933). Diurnal migration of plankton in the Gulf of Maine and its correlation with changes in submarine irradiation. *Biol. Bull.* **65** (3), 402–436.
20) Harvey, H.W. (1934). Measurement of phytoplankton population. *Jour. Mar. Biol. Ass.* **19**

(2), 761–773.

21) Richard, J. (1934). Liste générale des stations des campagnes scientifiques du Prince Albert de Monaco, avec neuf cartes des itinéraires et des notes et observations. *Res. Camp. Sci. Prince du Monaco.* Fas. **84**, 1–472.

22) Harvey, H.W. (1935). Note concerning a measuring plankton-net. *Jour. du Cons.* **10** (2), 179–184.

23) Leavitt, B.B. (1935). A quantitative study of the vertical distribution of the larger zooplankton in deep water. *Biol. Bull.* **68** (1), 115–130.

24) Welsh, J. H., F. A. Chace & R.F. Nunnemacher (1937). The diurnal migration of deep water animals. *Ibid.* **73** (2), 185–196.

25) Clarke, G.L. & D.F. Bumpus (1940, revised in 1950). The plankton sampler. An instrument for quantitative plankton investigations. *Amer. Soc. Limnol. Oceanogr. Spec. Publ.* (5), 1–8.

26) Wiborg, K.F. (1948). Experiments with the Clarke-Bumpus plankton sampler and with a plankton pump in the Lofoten area in northern Norway. *Rep. Norweg. Fish. Mar. Invest.* **9** (2), 1–22.

27) Comita, G.W. & J.J. Comita (1957). The internal distribution patterns of a calanoid copepod population, and a description of a modified Clarke-Bumpus plankton sampler. *Limnol. Oceanogr.* **2** (4), 321–332.

28) Paquette, R.G. & H.F. Frolander (1957). Improvements in the Clarke-Bumpus plankton sampler. *Jour. du Cons.* **22** (2), 284–288.

29) Kelly, G.F., A.M. Barker, G.M. Clarke & C.F. Bocken (1958). Redfish (Vertical distribution of redfish, pp. 29–33). *Ann. Rep. Woods Hole Lab., U. S. Fish and Wildlife Service, for the year ending June* 30, 1958. 29–36. (Photograph of Leavitt's double releasing mechanism).

30) Van Cleve, R. (1937). An electrical plankton-net closing device. *Jour. du Cons.* **12** (1), 171–173.

31) Hensen, V. (1887). Ueber die Bestimmung des Planktons oder des im Meere treibenden Materials an Pflanzen und Thieren. *Ber. Komm. wiss. Unters. deut. Meere, Berlin,* 5. (not consulted).

32) ——— (1895). Methodik der Untersuchungen. *Ergebn. Plankton Exped. Humboldt-Stift.* **1** B, 1–200.

33) Steuer, A. (1910). *Planktonkunde.* Leipzig u. Berlin. 723 p.

34) Monti, R. (1911). Un noveau petit filet pour les pêches planktoniques de surface à toute vitesse. *Int. Rev. ges. Hydrob. u. Hydrogr.* **3** (5/6), 548–552.

35) Hardy, A.C. (1925). The herring in relation to its animate environment. Part II. Report on trials with the plankton indicator. *Min. Agr. Fish. Fisheries Invest. London,* Ser. II, **8** (7), 1–13.

36) ——— (1936). The ecological relation between the herring and the plankton investigated with the plankton indicator. Part I. The object, plan and methods of investigations. *Jour. Mar. Biol. Ass.* **21** (1), 147–177.

37) Glover, R.S. (1953). The Hardy plankton indicator and sampler. A description of the various models in use. *Bull. Mar. Ecol.* **4** (26), 7–20.

38) Sheard, K. (1941). Improved methods of collecting marine organisms. *Rec. South Austral. Mus.* 7 (1). (also refer to Johnson, T.H. 1937, p. 6. B. A. N. Z. A. R. E. Rep.).

39) Gauld, D.T. & T.B. Bagenal (1951). A high-speed tow net. *Nature* **168**, 523.

40) Tamura, T. (1948). The method of collecting the plankton while the boat is in motion. *Jour. Fish., Hakodate Coll. Fish.* (53), 1–4. (in Japanese).

41) Tester, A.L. & J.C. Stevenson (1949). Results of the west coast of Vancouver Island herring investigation, 1947–48. *Rep. Brit. Columb. Dept. Fish.,* 1947. 4–86.

42) Arnold, E.L. (1952). A high-speed plankton sampler (Model Gulf I–A). *U. S. Fish and Wildlife Service, Spec. Sci. Rep. Fisheries* (88), 1–6.

43) Gehringer, J.W. (1952). An all-metal plankton sampler (Model Gulf-III). *Ibid.* (88), 7–12.

44) Motoda, S. (1953). New plankton samplers. *Bull. Fac. Fish., Hokkaido Univ.* 3 (3), 181–186.

45) ——— (1954). Handy underway plankton catchers. *Ibid.* **5** (2), 149–152.

46) Ahlstrom, E.H., J.D. Isaacs, J.R. Thrailkill & L.W. Kidd (1958). High-speed plankton sampler. *U. S. Fish and Wildlife Service, Fishery Bull.* 132, 58, 187–214.

47) Colton, J.B., R.R. Marak & D. Miller (1958). Plankton ecology. *Ann. Rep. Woods Hole Lab., U. S. Fish and Wildlife Service, for the year ending June* 30, 1958, 65–68.

48) Motoda, S., M. Anraku & T. Minoda (1957). Experiments on the performance of plankton samplings with net. *Bull. Fac. Fish., Hokkaido Univ.* **8** (1), 1–22.

49) Gibbon, S.G. (1933). A new type of sampler for use in the quantitative analysis of plankton collections. *Jour. du Cons.* **8** (2), 195–200.

50) Wiborg, K.F. (1951). The whirling vessel. An apparatus for the fractioning of plankton samples. *Rep. Norweg. Fish. Mar. Invest.* **9** (13), 1–16.

51) Kott, Patricia (1953). Modified whirling apparatus for the subsampling of plankton. *Austral. Jour. Mar. Fresh-water Res.* **4** (2), 387–393.

52) McEwen, G.F., M.W. Johnson & T.R. Folsom (1954). A statistical analysis of the performance of the Folsom plankton sample splitter, based upon test observations. *Arch. Meteorol. Geophys. u. Bioklimatol.* Ser. A. *Meteorol. u. Geophys.* **7**. 502–527.

53) Jacobsen, J.P. & O.Paulsen (1912). A new apparatus for measuring the volume of plankton samples by displacement. *Medd. fra Komm. for Havunders.* Ser. *Plankton* **1** (11), 1–6.

54) Matsudaira, Y. (1933). (Quantitative measurement of plankton by displacement method and a new apparatus for the measurement). *Kaiyo-Kishodai-Iho* (53), 1–7. (in Japanese).

55) ——— (1933). (Quantitative measurement of plankton by displacement method and a new apparatus for the measurement). *Umi-to-Sora* **13** (1), 1–7. (in Japanese).

56) Florander, H.F. (1954). Plankton volume displacement indicator. *Dept. Oceanogr., Univ. Wash., Tech. Rep.* (25), 1–13.

57) ——— (1957). A plankton volume indicator. *Jour. du Cons.* **22** (3), 278–283.

PLATES I–VIII

PLATE I

Fig. 17. Sketch of twin net with semi-circular openings (model 1)

b. d. ..... bottom disc
m. i. l. .... metal insert lock
n. ..... net
s. r. ..... supporting rod
t. d. ..... top disc
w. c. ..... wire cable

Fig. 18. Sketch of continuous vertical sampler (model 2)

c. n. ..... conical net
d. s. g. .... double silk gauze band
p. d. w. .... propeller driven by water current
r. d. p. .... reel driven by propeller
s. f. m. ... space for flow-meter
s. s. g. .... single silk gauze band
s. w. s. .... spool winding silk gauze band
w. c. ..... wire cable
w. i. ..... water intake
w. o. ..... water outlet
w. s. ..... window with sieve

Fig. 19. Sketch of twin net with bent lid (model 3)

c. ..... clamp
f. n. ..... first net
l. ..... lid
m. f. ..... mouth frame
s. ..... spring
s. n. ..... second net
s. r. ..... supporting rod
t. ..... trigger
w. c. ..... wire cable

Fig. 20. Sketch of twin net for collecting in any two zones of water (model 4)

ch. ..... chain
f. c. ..... first clamp
f. n. ..... first net
f. t. ..... first trigger
m. f. ..... mouth frame
s. ..... spring
s. c. ..... second clamp
s. n. ..... second net
s. t. ..... second trigger

Fig. 21. Sketch of four square net assembly (model 5)

f. m. ..... first messeenger
f. n. ..... first net
f. t. ..... first trigger
s. m. ..... second messenger
s. n. ..... second net
s. t. ..... second trigger
th. c. ..... third clamp. A part of square plate is removed to show the mechanism underside.
th. m. .... third messenger
th. n. ..... thrid net
th. t. ..... third trigger

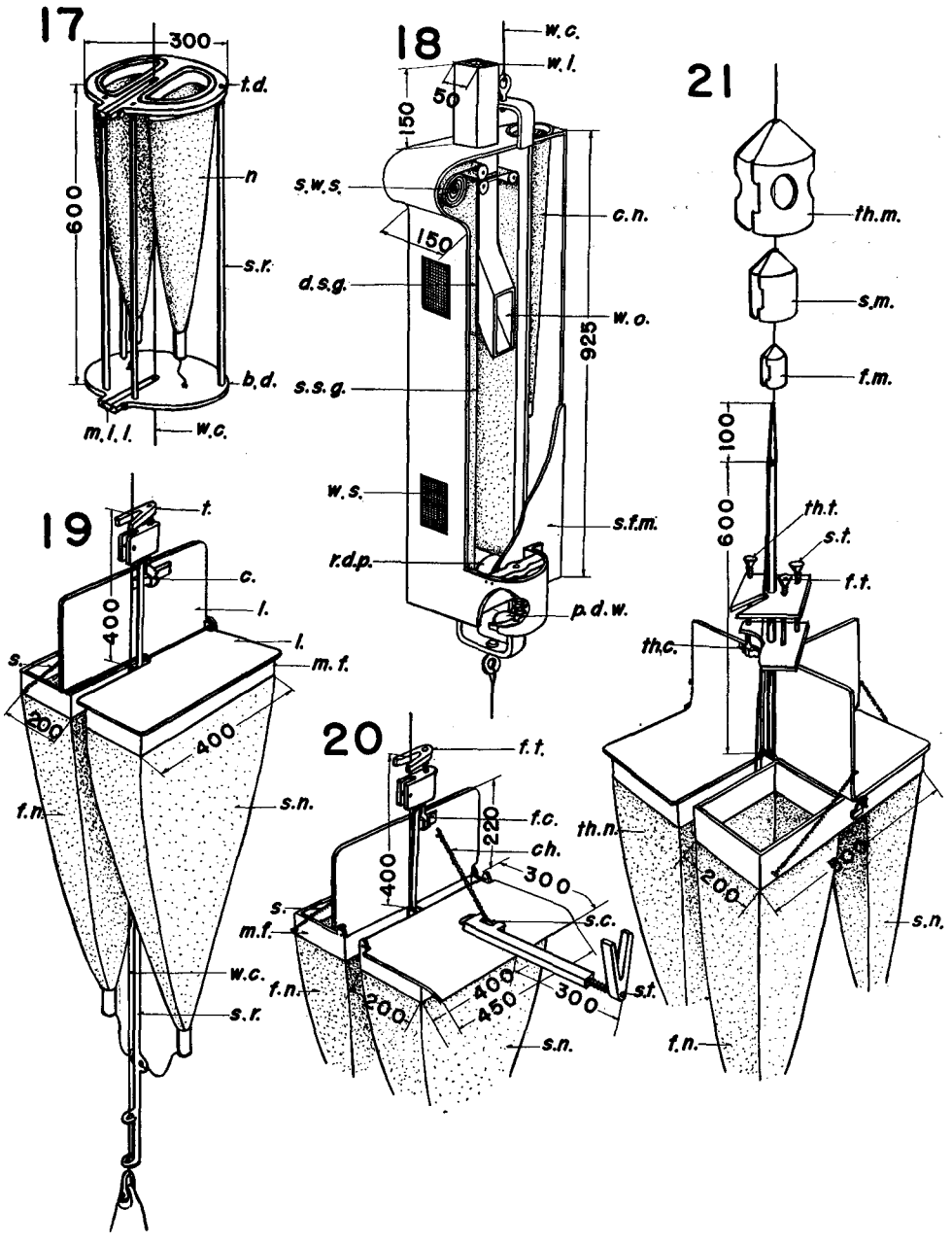

Motoda : Devices of Plankton Apparatus

PLATE II

Fig. 22. Sketch of double purse net (model 6)

s. a. ..... swinging arm

t. ..... trigger

t. w. ..... tripping weight

Fig. 23. Sketch of double closing net (model 7)

o. n. ..... open net

r. m. ..... releasing mechanism (Discovery type)

t. ..... trigger

th. n. ..... throttled net

Fig. 24. Sketch of horizontal tow with nets which are directly attached on the cable (model 8)

Fig. 25. Sketch of mouth part of horizontal net directly attached on the cable (model 8)

n. ..... net

s. ..... supporter

w. ..... wire cable

w. c. ..... wire clamp

Fig. 26. Horizontal nets employed by Nishimura (After Nishimura 1957)

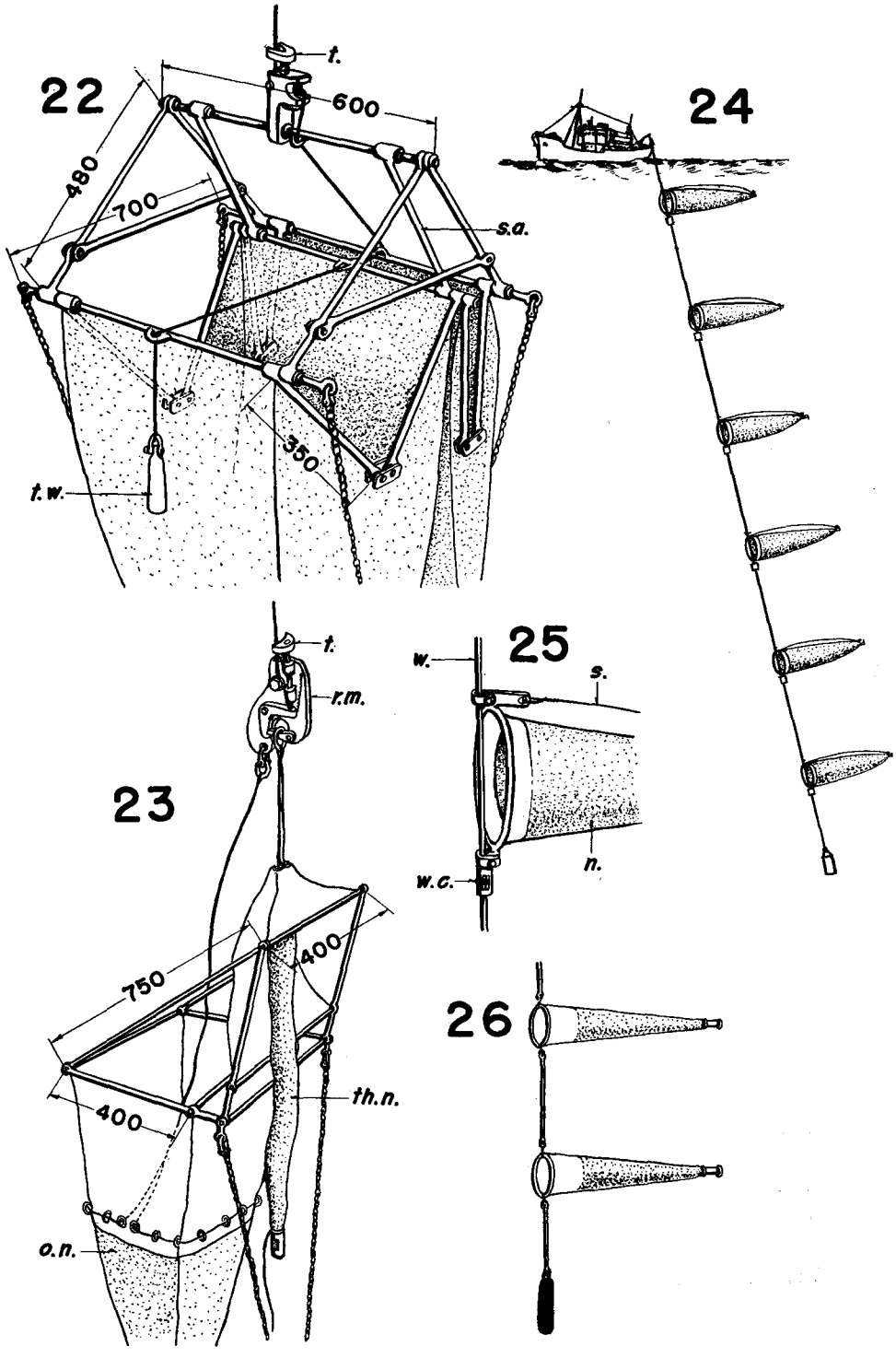

Motoda : Devices of Plankton Apparatus

PLATE III

Fig. 27. Sketch of horizontal net with sliding ring (model 9)

e. m. r. ..... eye fixed on mouth ring
h. a. ..... hinged arm
n. ..... net
n. s. ..... net supporter
s. r. ..... supporting rod
w. ..... wire cable

Fig. 28. Profile of frame of horizontal net with sliding ring (model 9)

e. ..... eye fixed on mouth ring
h. a. ..... hinged arm
m. r. ..... mouth ring
s. r. ..... supporting rod
w. ..... wire cable

Fig. 29. Frontal view of frame of horizontal net with sliding ring (model 9)

e. ..... eye fixed on mouth ring
h. a. ..... hinged arm
m. r. ..... mouth ring
s. r. ..... supporting rod
w. ..... wire cable

Fig. 30. Sketch of small horizontal net with rotary mouth ring (model 10) in lowering position

b. w. ..... balance weight
m. r. ..... mouth ring
n. ..... net
r. ..... rod
w. ..... wire cable
w. c. ..... wire clamp

Fig. 31. Sketch of small horizontal net with rotary mouth ring (model 10) in horizontal towing position

c. p. ..... circular plate

Fig. 32. Sketch of small horizontal net with rotary mouth ring (model 10) in raising position

c. p. ..... circular plate

Fig. 33. Sketch of triangular mid-water net (model 11)

b. c. ..... bolting cloth
c. j. ..... collecting jar
ch. ..... chain
h. b. ..... horizontal bar
s. ..... supporter
st. ..... stramin
t. c. ..... towing cable

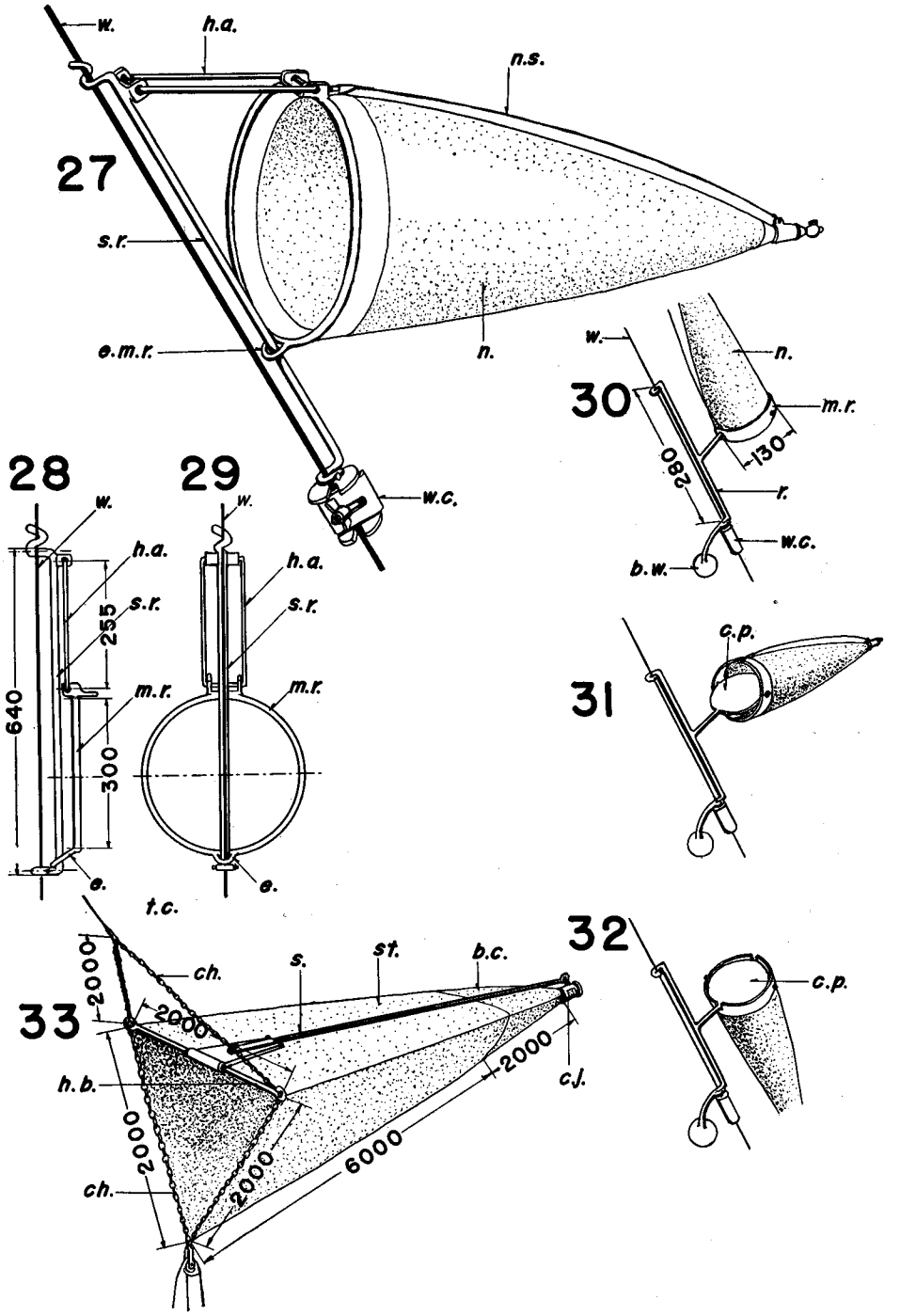

Motoda : Devices of Plankton Apparatus

PLATE IV

Fig. 34. Side view of double releasing mechanism with dissolving substanace (model 12)

cy. ..... cylinder
f. cy. ..... frame on cylinder
f. f. p. .... frame on follower piston
f. p. ..... follower piston
f. r. a. .... first releasing arm
s. r. a. .... second releasing arm

Fig. 35. Plan of double releasing mechanism with dissolving substance (model 12)

c. b. ..... candy ball
cy. ..... cylinder
f. cy. ..... frame on cylinder
f. f. p. .... frame on follower piston
f. p. ..... follower piston
f. r. a. .... first releasing arm
s. r. a. .... second releasing arm

Fig. 36. Section A-B in Fig. 35

f. cy. ..... frame on cylinder
f. f. p. .... frame on follower piston
f. p. ..... follower piston

Fig. 37. Section C-D in Fig. 35.

cy. ..... cylinder
f. cy. ..... frame on cylinder
f. f. p. .... frame on follower piston
f. p. ..... follower piston

Fig. 38. Section E-F in Fig. 35

cy. ..... cylinder
f. f. p. .... frame on follower piston
f. r. a. .... first releasing arm
s. r. a. .... second releasing arm

Fig. 39. Sketch of double releasing mechanism with dissolving substance (model 12) and cable connector

c. c. ..... cable connector
cy. ..... cylinder
f. cy. ..... frame on cylinder
f. f. p. .... frame on follower piston
f. p. ..... follower piston
f. r. a. .... first releasing arm
s. r. a. .... second releasing arm
t. l. ..... towing line
th. l. ..... throttling line
w. ..... wire cable
w. c. ..... wire clamp

Fig. 40. Sketch of opening-reclosing net set on the cable by means of double releasing mechanism with dissolving substance (model 12)

d. r. m. ... double releasing mechanism
t. l. ..... towing line
th. l. ..... throttling line
th. n. ..... throttled net
w. ..... wire cable

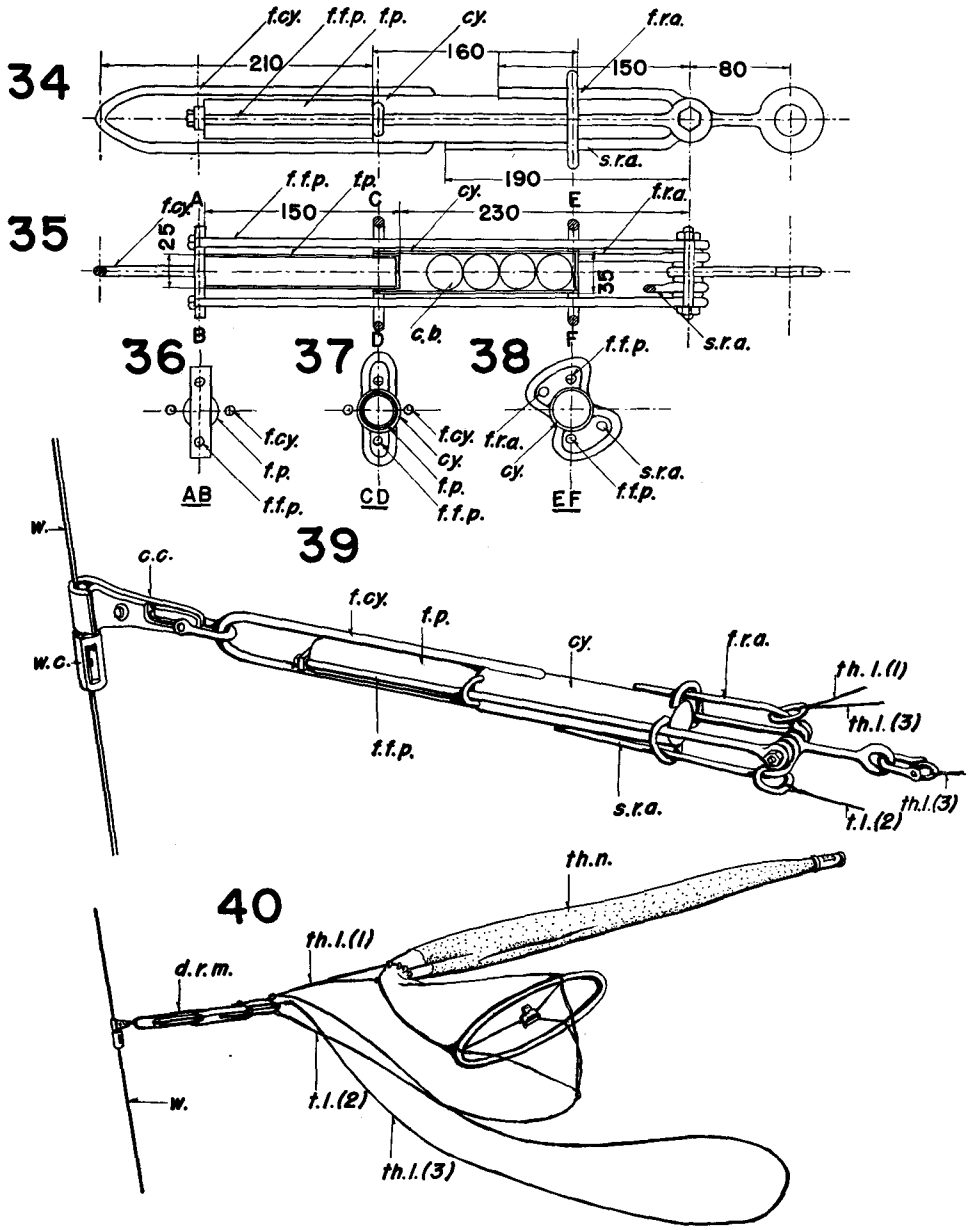

Motoda : Devices of Plankton Apparatus

PLATE V

Fig. 41. Plan of double releasing mechanism with long rotary neck (model 13)

f. c. ..... first clamp
f. t. ..... first trigger
s. c. ..... second clamp
s. t. ..... second trigger

Fig. 42. Sketch of double releasing mechanism with long rotary neck (model 13)

f. c. ..... first clamp
f. t. ..... first trigger
s. c. ..... second clamp
s. t. ..... second trigger
t. l. ..... towing line
th. l. ..... throttling line
w. ..... wire cable
w. c. ..... wire clamp

Fig. 43. Plan of double releasing mechanism with horizontal bar (model 14)

f. c. ..... first calmp
f. t. ..... first trigger
s. c. ..... second clamp
s. t. (*h. b.*). ..... second trigger (horizontal bar)

Fig. 44. Section of first messenger of double releasing mechanism with horizontal bar (model 14)

Fig. 45. Section of second messenger of double releasing mechanism with horizontal bar (model 14)

Fig. 46. Sketch of double releasing mechanism with horizontal bar (model 14)

ch. ..... chain
f. c. ..... first clamp
f. m. ..... first messenger
f. t. ..... first trigger
s. c. ..... second clamp
s. t. (*h. b.*) ..... second trigger (horizontal bar)
s. m. ..... second messenger
s. w. ..... spin washer
sp. ..... spring
t. l. ..... towing line
th. l. ..... throttling line
w. ..... wire cable

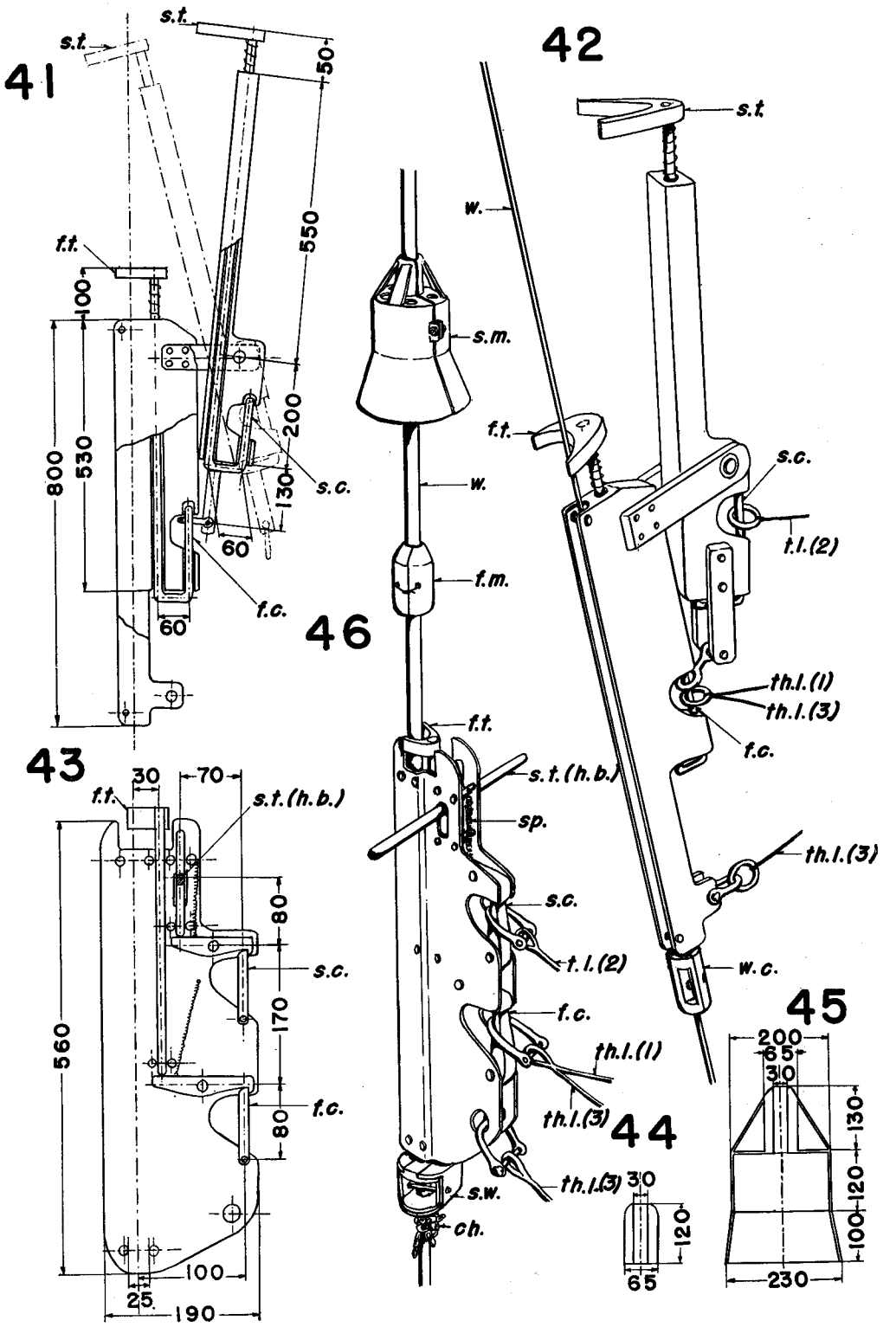

Motoda : Devices of Plankton Apparatus

PLATE VI

Fig. 47. Plan of high-speed tow net with heavy head (model 15)

cy. ..... cylinder
f. n. ..... folded net
h. r. ..... head rod

Fig. 48. Frontal view of high-speed tow net with heavy head (model 15)

Fig. 49. Sketch of high-speed tow net with heavy head (model 15)

cy. ..... cylinder
f. n. ..... folded net
h. r. ..... head rod
t. c. ..... towing cable

Fig. 50. Plan of simple underway plankton catcher IV (model 16)

h. p. ..... head piece
i. cy. ..... inner cylinder
n. ..... net
o. cy. ..... outer cylinder
s. f. m. .... space for flow-meter
s. p. ..... stopping pin
w. p. ..... water path

Fig. 51. Frontal view of simple underway plankton catcher IV (model 16)

Fig. 52. Sketch of simple underway plankton catcher IV (model 16) showing connection of towing cable to the sampler in surface tow

t. c. ..... towing cable

Fig. 53. Sketch of simple underway plankton catcher IV (model 16) showing connection of line suspending depressor from the sampler in subsurface tow

d. ..... to depressor
t. c. ..... towing cable

Fig. 54. Sketch of simple underway plankton catcher IV (model 16) showing attachment of the sampler in simultaneous tow with several samplers at different depths

t. c. ..... towing cable
w. c. ..... wire clamp

Fig. 55. Side view of simple underway plankton catcher VI with outside frame (model 17)

o. f. ..... outside frame
s. p. ..... stopping pin

Fig. 56. Plan of simple underway plankton catcher VI with outside frame (model 17)

o. f. ..... outside frame
n. ..... net
s. f. m. .... space for flow-meter
s. p. ..... stopping pin

Fig. 57. Frontal view of simple underway plankton catcher VI with outside frame (model 17)

o. f. ..... outside frame

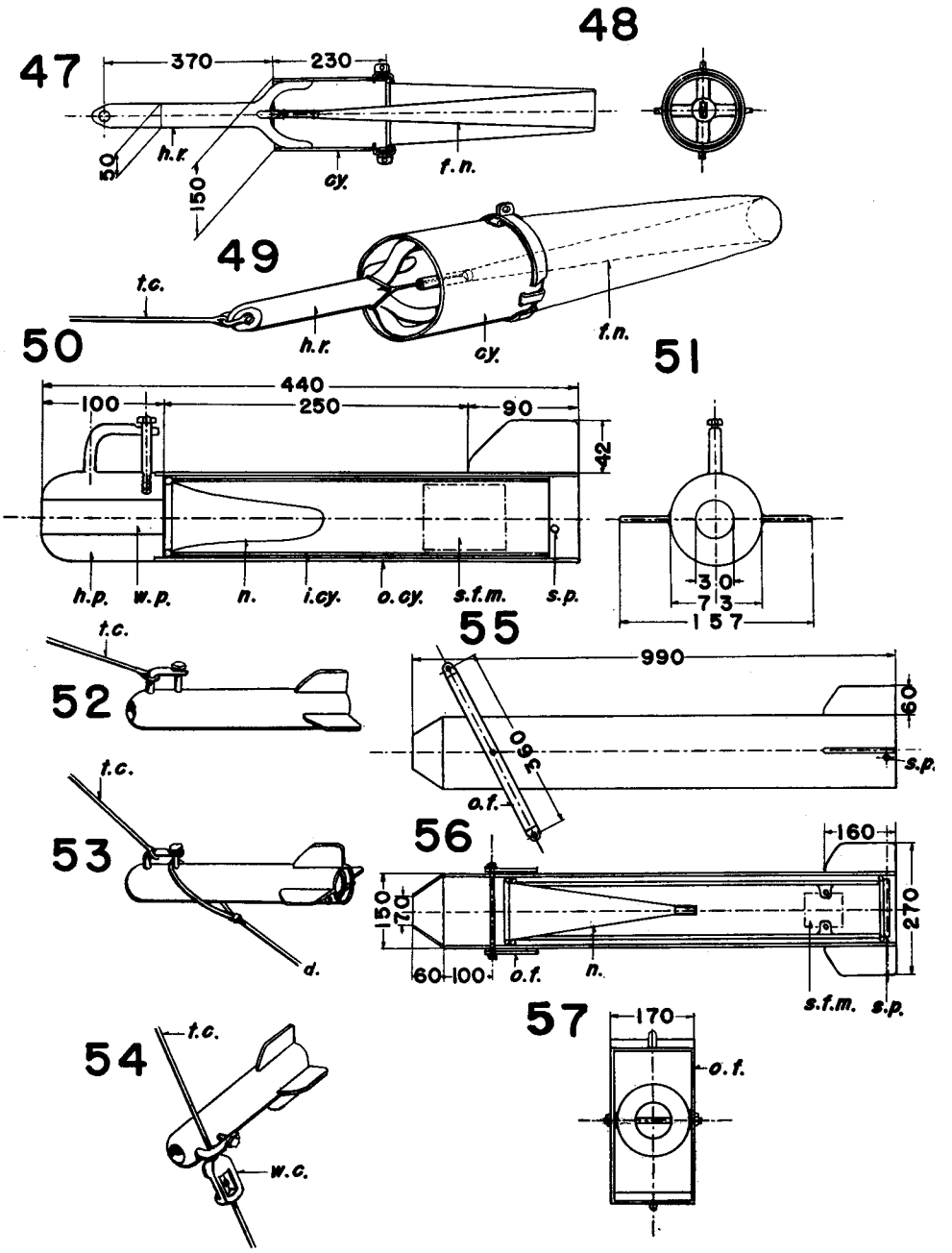

Motoda : Devices of Plankton Apparatus

PLATE VII

Fig. 58. Plan of multiple net underway sampler (model 18) showing path of water tunnel

f. r. ..... fore-reel
r. r. ..... rear-reel
w. t. ..... water tunnel
w. i. c. .... water intake cap

Fig. 59. Side view of multiple net underway sampler (model 18)

f. r. ..... fore-reel
n. ..... net
r. r. ..... rear-reel
w. i. c. .... water intake cap
w. t. ..... water tunnel

Fig. 60. Sketch of the anterior portion of multiple net underway sampler (model 18)

a. l. ..... accessory line
a. o. ..... anterior opening
f. m. b. .... flexible metal band
n. ..... net
sh. f. r. ... shaft of fore-reel
t. c. ..... towing cable
w. i. c. .... water intake cap
w. t. ..... water tunnel

Fig. 61. Vertical of multiple net underway sampler with storing tank (model 19)

f. m. b. .... flexible metal band
f. r. ..... fore-reel
f. t. ..... formalin tank
n. ..... net
n. t. ..... net turned inside out
r. r. ..... rear-reel
sp. ..... spring
w. t. ..... water tunnel

Fig. 62. Plan of multiple net underway sampler with storing tank (model 19)

f. m. b. .... flexible metal band
f. r. ..... fore-reel
r. r. ..... rear-reel
w. o. ..... water outlet
w. t. ..... water tunnel

Fig. 63. Section A-B in Fig. 61

f. m. b. .... flexible metal band
n. ..... net
w. o. ..... water outlet

Fig. 64. Section C-D in Fig. 61

f. m. b. .... flexible metal band
f. t. ..... formalin tank
n. ..... net
n. t. ..... net turned inside out

Fig. 65. Sketch of anterior portion of multiple net underway sampler with storing tank (model 19)

a. l. ..... accessory line
a. o. ..... anterior opening
b. ..... bumper
f. m. b. .... flexible metal band
f. r. ..... fore-reel
f. t. ..... formalin tank
l. c. d. .... line connected to depressor
n. ..... net.
n. t. ..... net turned inside out
r. fl. ..... rubber flaps
w. o. ..... water outlet
w. t. ..... water tunnel

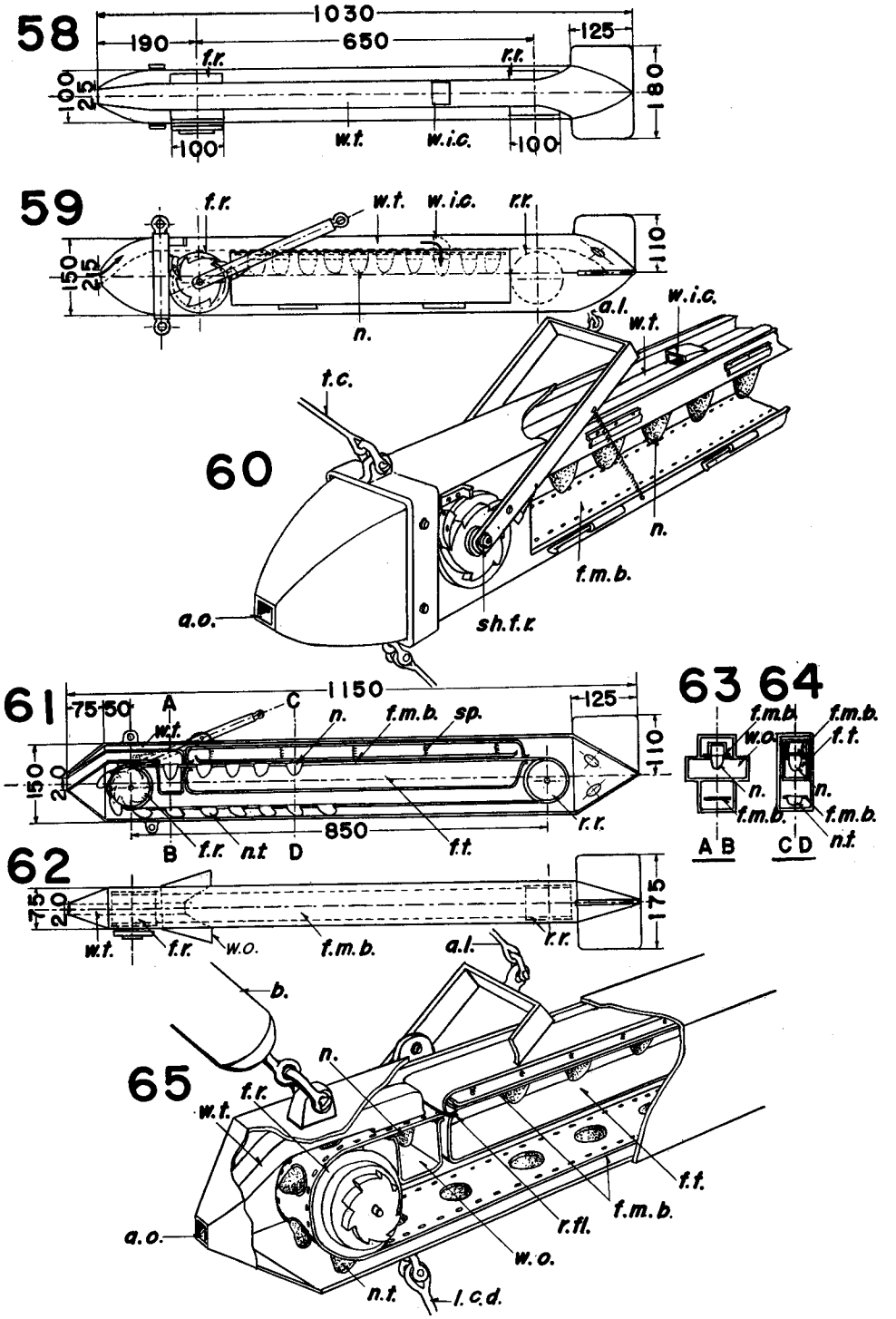

Motoda : Devices of Plankton Apparatus

PLATE VIII

Fig. 66. Vertical of plankton sample splitting box (model 20)

b. p. ..... base piece
c. ..... cover
l. r. ..... low ridge
s. ..... septum

Fig. 67. Plan of plankton sample splitting box (model 20)

c. ..... cover
c. o. ..... corner opening
l. r. ..... low ridge
s. ..... septum

Fig. 68. Sketch of plankton sample splitting box (model 20)

b. p. ..... base piece
c. ..... cover
c. o. ..... corner opening
l. r. ..... low ridge
s. ..... septum

Fig. 69. Vertical of plankton sample splitting cylinder (model 21)

b. p. ..... base plate
c. ..... cover
s. ..... septum

Fig. 70. Plan of plankton sample splitting cylinder (model 21)

b. p. ..... base plate
c. ..... cover
s. ..... septum

Fig. 71. Sketch of plankton sample splitting cylinder (model 21)

b. p. ..... base plate
c. ..... cover
s. ..... septum

Fig. 72. Vertical of plankton sample aspiration filtering apparatus (model 22)

a. ch. ..... aspiration chamber
fi. ..... filter
l. f. ..... lower funnel
m. p. ..... metal pipe
r. f. w. .... receptor of filtered water
r. p. ..... rubber plug
st. ..... stopcock
u. f. ..... upper funnel

Fig. 73. Sketch of assembly of plankton sample aspiration filtering apparatus (model 22)

a. ch. ..... aspiration chamber
cl. ..... clip
g. cy. ..... graduated cylinder
m. p. ..... metal pipe
r. f. w. .... receptor of filtered water
r. p. ..... rubber plug
r. t. ..... rubber tube connected to aspirator
s. ..... supporter
st. r. ..... stopcock of receptor
u. f. ..... upper funnel

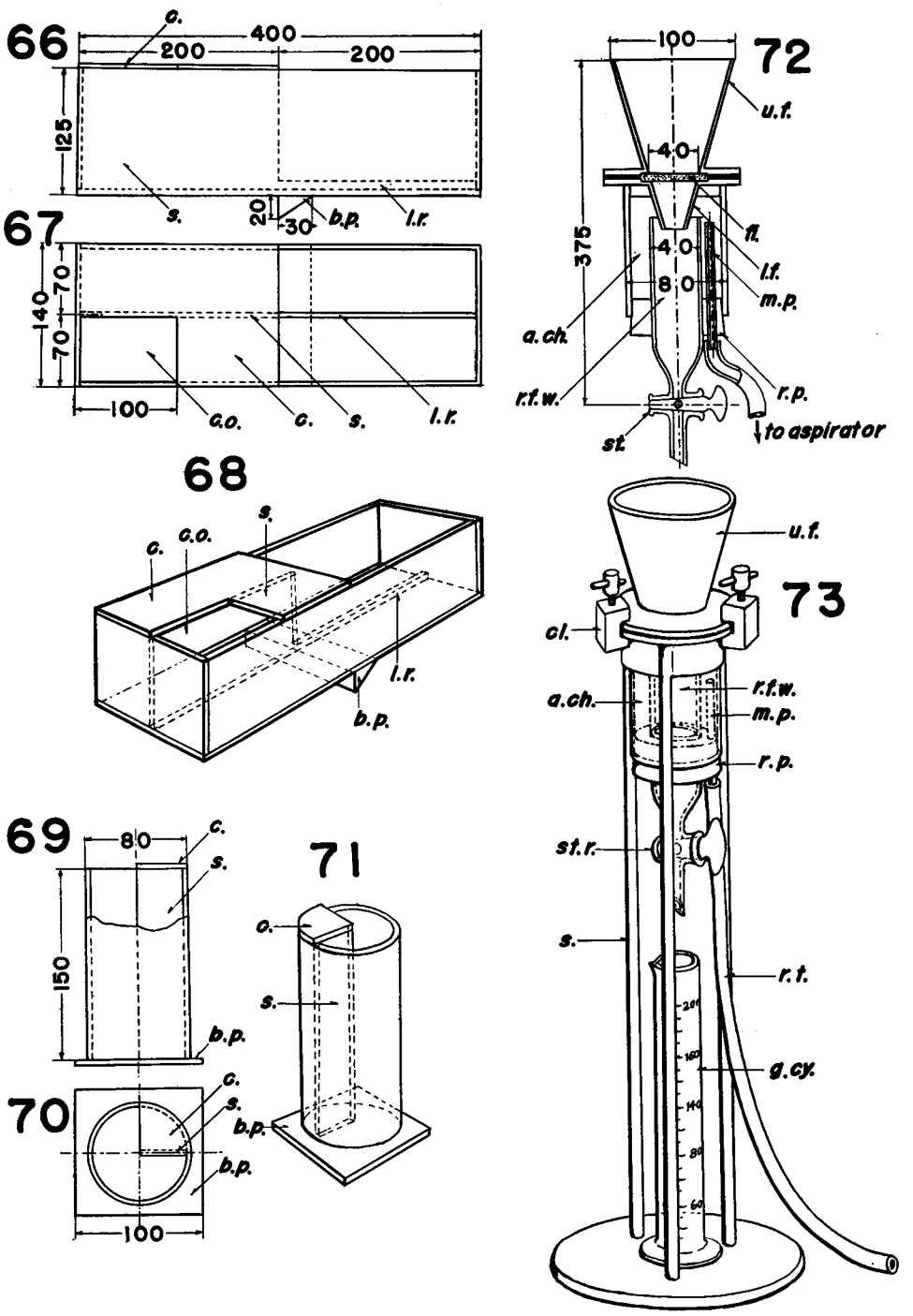

Motoda : Devices of Plankton Apparatus