NEW PLANKTON SAMPLERS

by

Sigeru MOTODA

(Faculty of Fisheries, Hokkaido University, Hakodate, Japan)

I. Vertical successive plankton sampler (Figs.1–4)

In studying the vertical distribution of plankton in the deep sea the collection is usually made by the aid of closing mechanism of the net. This method, however, requires much time, for the collection must be repeated from several different depths. The writer has devised a new sampler which is able to collect the plankton population separately from several different layers (five layers) by a single vertical haul.

The cylindrical apparatus, 15.5 cm in diameter and 35.5 cm in total height, is attached at the terminal end of the ordinary plankton net, instead of a simple bucket. The net used is 57 cm in mouth diameter, 200 cm in length and made of bolting cloth, 42.5 meshes per inch in upper 120 cm and 56.5 meshes per inch in lower 80 cm.

During the haul upward, the propeller revolved by water current operates to revolve the supporting disc, which bears five small store-nets (3.5 cm in diameter, 5 cm in length, made of bolting cloth 56.5 meshes per inch) arranged in a circle. As the connection between the upper large condensing net and underlying small nets is made at an eccentric hole of the disc, the small nets connected with the upper large net are succesively alternated with revolution of the supporting disc. Thus, the plankton organisms sampled at different depths are stored in the different small nets. When the disc accomplishes one round, a rod hanging on the margin of the disc slips down through the marginal slit of the disc, and stops the propeller, no more sampling being made.

The vertical distance of sampling can be regulated for three grades by changing the gear ratio (1/508.76, 1/1014.4 and 1/2051.27). The largest distance is kept as about 1200 metres for five layers (about 240 metres for one layer), the moderate distance is kept as about 600 metres for five layers (about 120 metres for one layer), and the smallest distance is kept as about 300 metres for five layers (about 60 metres for one layer).

This apparatus was registered as patent No. 192461 of Tsurumi Seiki-Kosakusho at Tsurumi, Yokohama, on January 25th 1952.

II. High-speed successive plankton sampler (Figs. 5–7)

Since Hensen devised the "basket net" in 1888, several different patterns of under-way sampling apparatuses have been developed; there are Borgert's tow net (Steuer: Plank-

Fig. 1. Vertical successive plankton sampler (scale in inch)

A. Bottom view.

B. Front sectional view.

C. Detail of gear train (gear connection 7–8, medium-speed; 9–11, high-speed; 10–12, low-speed)

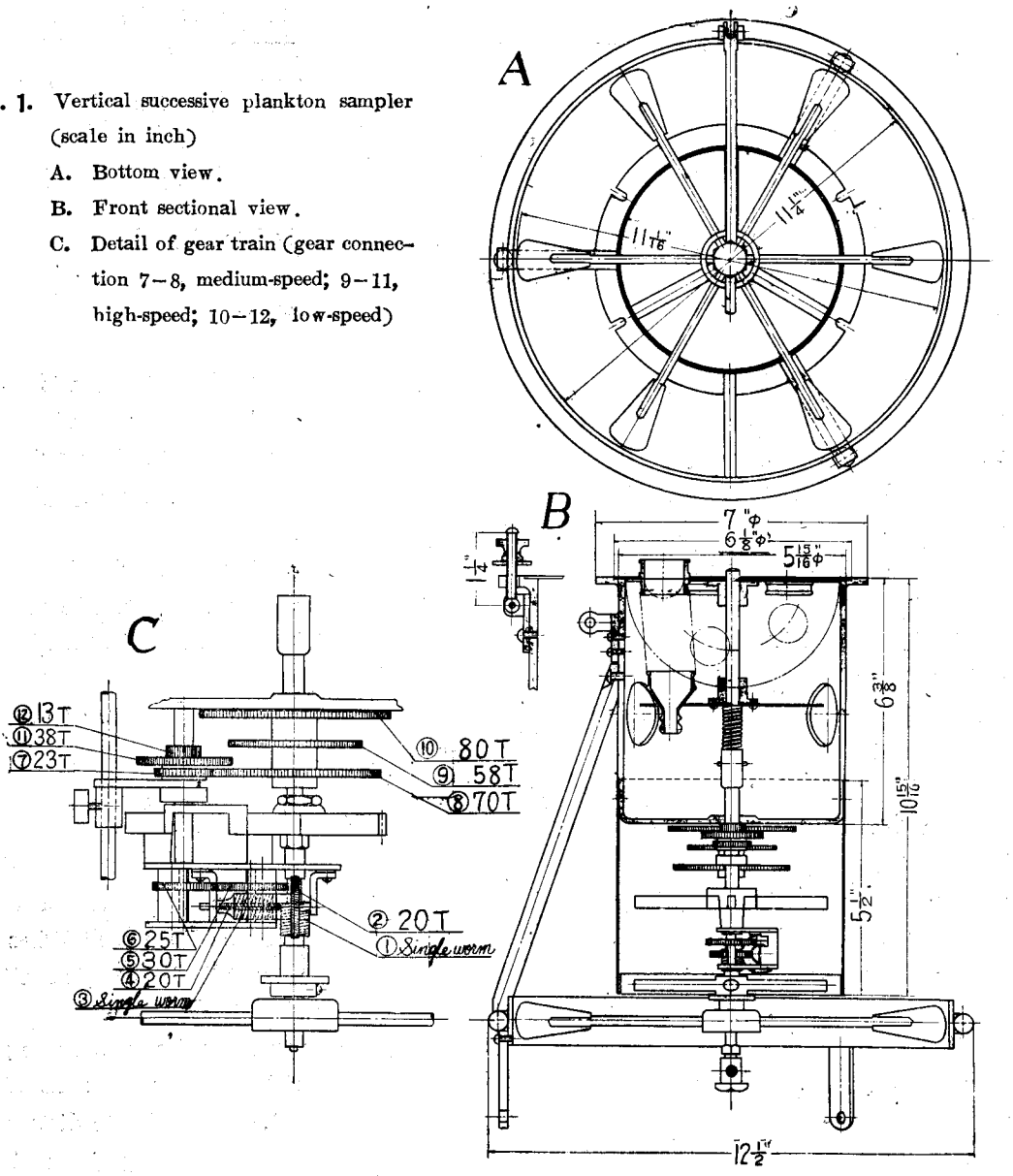

tonkunde), Monti's collector (Monti, 1910–11), Hardy's "plankton indicator" (Hardy, 1926a, 1926b, 1934, 1936a, Henderson et al., 1936), Hardy's "continuous plankton recorder" (Hardy, 1935, 1936b), Tamura's collector (Tamura, 1948), Tester and Stevenson's "metal net" (Tester and Stevenson, 1949), "high-speed plankton collector" of the California sardine research group (Marine Research Committee, 1950) and Gauld and Beganal's tow net (Gauld and Beganal, 1951).

Most of them are comparatively simple apparatuses, but a few are somewhat

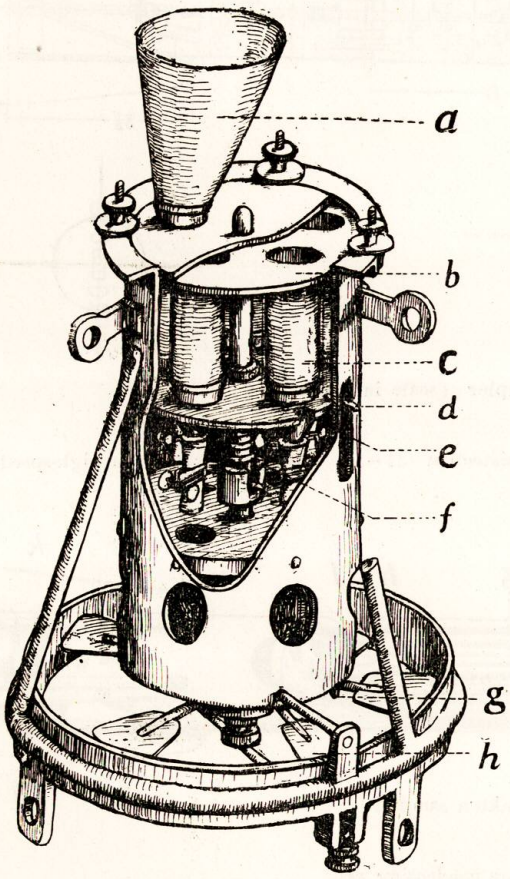

Fig. 2. Sketch of vertical successive plankton sampler.

a. Condensing net.

b. Upper revolving disc which bears store-nets.

c. Store-net.

d. Upper bending end of the stopper.

e. Marginal slit of the lower revolving disc.

f. Spring which forces the revolving disc upwards.

g. Terminal end of the stopper.

h. Propeller.

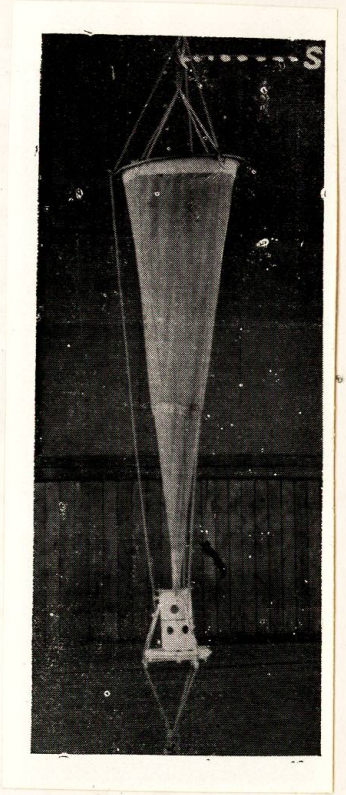

Fig. 3. Vertical successive plankton sampler. s: Swivel.

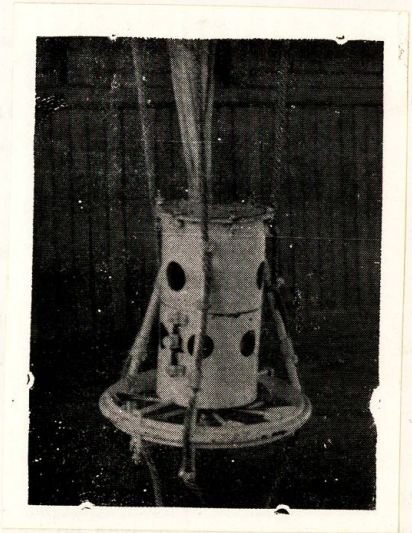

Fig. 4. Vertical successive plankton sampler.

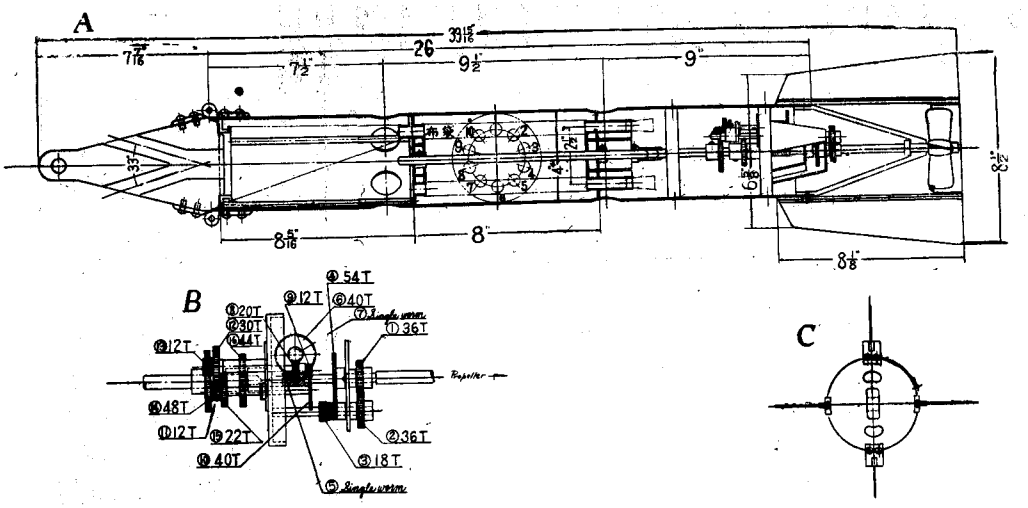

Fig. 5. High-speed successive plankton sampler (scale in inch).

A. Sectional view.

B. Detail of gear train (gear connection 11–12, low-speed; 15–16, high-speed).

C. Rear view.

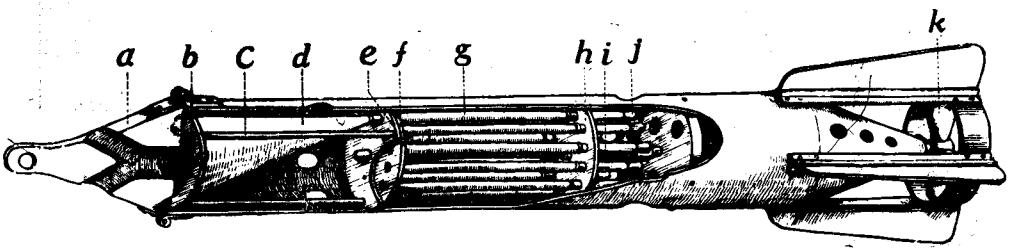

Fig. 6. Sketch of high-speed successive plankton sampler.

a. Solid head piece.

b. Anterior fixed disc which bears condensing net.

c. Supporting rod between anterior and posterior fixed disc.

d. Condensing net.

e. Posterior fixed disc.

f. Anterior revolving disc which bears store-nets.

g. Store-net.

h. Posterior revolving disc.

i. Spring which forces the revolving disc forwards.

j. Rubber plug.

k. Propeller.

complicated in their structure. The "continuous plankton recorder" is equipped with rolling mechanisms of the bolting cloth and is fit to provide quantitative and qualitative samples over wide areas. The "high-speed plankton collector" is equipped with depth-flow meter to know the exact depth at which the collection is made and the quantity of water

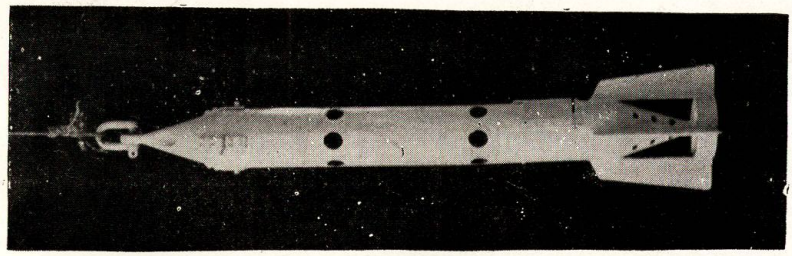

Fig. 7. High-speed successive plankton sampler.

actually filtered. Four collectors are usually attached to a single wire, and the end of wire is kept at certain depth by the depressing resistance of special depressor when being towed. Thus, the collection of the plankton from four layers is performed at the same time. Gauld and Beganal's net seems to be very simple and conventional. They made trial towing at speed of at least 7 knots.

The successive plankton sampler is an instrument of the same principle as the vertical sampler, but it is modified to tow at the surface from a moving ship. It is sturdily made of metal, consisting of a cylindrical tube and tapering portions at both ends, 10 cm in diameter of trunk, 100 cm in total length and 15 kg in weight. The head piece is made of solid metal to be particularly heavy, so as to sink when the instrument is towed at high-speed. As no special depressing vane is supplied, the resistance produced by the current in under-way as fast as 8 knots is only about 10 kg. At both sides of the head piece two holes, 2 cm in diameter respectively, are pierced. The water which entered from these holes is introduced into the condensing net, and the organisms left in this net are then stored in the posterior narrow cylindrical store-nets (15 cm in diameter and 18 cm in length) which are arranged circularly at the margin of the supporting disc. The magnitude of meshes of the cloth of the condensing and store-nets may be decided by the purpose of collection. The water straining from the large condensing net and the narrow store-nets flows out by the holes in the wall of the cylinder. The supporting disc of the store-nets is rotated very slowly by the motion produced by the posterior propeller when the instrument is towed, and so the organisms distributed along the course of the ship are successively stored in the different sotre-nets separately.

The distance of succession in sampling can be regulated to two kinds by changing the gear ratio (1/16000 and 1/80000). The experiments show that when the gear is connected as 1 : 16000 every store-net catches the organisms distributed along about 1 mile of the course at 8 knots ; that is one round of the supporting disc corresponds to 10 miles.

The present writer is greatly indebted to Prof. Dr. N. Inouye of the Faculty of Fisheries, Hokkaido University at Hakodate, for giving valuable suggestions in planning of the instruments. He is also very much obliged to Capt. S. Mishima of the Hokusei-maru, the training ship of the Hokkaido University, Capt. Imamura of the Soyo-maru, the surveying ship of the Tokai Regional Fisheries Research Laboratory, and Capt. M. Sato and Boatswain Kasai of Kaiyo-maru No. 4 of the Hydrographic Department, Maritime Safety Headquarters, for help in the trial sampling at sea. The present work has been rendered possible through the financial support of a grant-in-aid for Fundamental Scientific Research,

and another for Developmental Scientific Research, from the Ministry of Education, and partly through financial aid from the Hokkaido Fisheries Scientific Institution at Yoichi, for which the writer expresses his deep appreciation.

References

Gauld, D. T. and T. B. Beganal, 1951. A high-speed tow net. Nature, Vol 168, p. 523.

Hardy, A. C., 1926a. The herring in relation to its animate environment. part II. Report on trials with the plankton indicator. Min. Agr. Fish., London, Fish. Invest., Ser. II, Vol. 8, No. 7, 1925, pp. 1–13.

------, 1926b. A new method of plankton research. Nature, Vol. 118, p. 630.

------, 1934, Science and the fisheries. An account of a new research department. Progress, Jan. 1934, pp. 1–8.

------, 1935. The continuous plankton recorder. A new method of survey. Rapp. Proc.-Verb. Reunions, Vol. 95, pp. 36–47.

------, 1936a. The ecological relations between the herring and the plankton investigated with the plankton indicator. Part I. The object, plan and methods of the investigation. Jour. Mar. Biol. Ass., Vl. 21, No. 1, pp. 147–177.

------, 1936b. The continuous plankton recorder. Discovery Reports, Vol. 11, pp. 457–510, pls. 1–4.

Henderson, G. T. D., C. E. Lucas and J. H. Fraser, 1936. The ecological relations between the herring and the plankton investigated with the plankton indicator. Part IV. The relation between catches of herring and phytoplankton collected by the plankton indicator. Jour. Mar. Biol. Ass., Vol. 21 No. 1, pp. 277–291.

Marine Research Committee, Department of Natural Resources, State of California, 1950. California cooperative sardine research program. Progress Report 1950.

Monti, R., 1910–11. Un nouveau petit filet pour les pouches planktoniques de surface à toute vitesse. Int. Rev. ges. Hydrob. Hydrogr., Bd. 3, pp. 548–552.

Tamura, T., 1948. The method of collecting the plankton while the boat is in motion. Jour. Fish., Hakodate Coll. Fish., No. 53, pp. 1–4, (in Japanese).

Tester, A. L. and J. C. Stevenson, 1949. Results of the west coast of Vancouver Island herring investigation, 1947–48. Rep. Brit. Columb. Dept. Fish., 1947, pp. 41–86.

（水産科学研究所業績　第121号）