Econ. J. of Hokkaido Univ.,
Vol. 25 (1996), pp. 27～59

Development and Transfer of Appropriate Key Technology

—Case Study of Malayawata Steel—

YONEYAMA Kikuji

The purpose of this paper is to analyze the dynamic process of the development and transfer of appropriate technology. Malaysia succeeded in the construction of a newly planned small scale integrated steel mill by the transfer of appropriate technology from Japan. The research methods used for the analysis are a literature survey and interviews with top management and other workers in Malaysia and Japan. The blast furnace using rubber wood charcoal and local low quality iron ore is the key appropriate technology. The technology invented by the engineer's and scientific methods solved the problem of industrialization in Malaysia.

Contents

1. Technology Transfer as an International Problem Solving Activity

Under-developed countries are not merely the suppliers of natural resources to advanced countries. At the same time, they are not markets for industrial

products made in advanced countries. International relations are complicated in the larger context of the North-South problem.

It is important that the advanced countries including Japan cooperate to help developing countries to develop an autonomous national economy. It is indispensable for the peace and stability of international relations and the maintenance of the global environment. The definition of appropriate technology is as follows: the technology for founding of the most effective business to solve the peculiar problems in the development of traditional society in developing countries.

In the 1860's, Japan as an under developed agricultural country started to industrialize by technology transfer and transplant from advanced western countries. In 1945, Japan restarted to reconstruct its industries and national economy in the ruins of World War II.

During the cold war period, Japan benefited from capital and technology from advanced countries, mainly from the United States. Japan also obtained stable and abundant natural resources from developing countries. Japan succeeded in the recovery and reconstruction of its industries and economy, and became an economic super power in the 1980's. Today, it is necessary for Japan to contribute to the development and transfer of appropriate key technology to developing countries. Japan's experiences of success and failure will contribute to the problem solving.

Overseas technological cooperation is an international problem solving activity in which the UN and several governments participate. At the micro level, more than two organizations and many people participate in the problem solving activity.

Overseas technological cooperation has many complex aspects. Essentially, it is a problem solving activity with the following limiting factors:

(1) maintaining the environment
(2) saving resources
(3) saving energy
(4) utilizing local resources
(5) utilizing local capital
(6) use indigenous technologies
(7) development of the capability and creativity of all people participating in the given project.

The people of developing countries want to improve their lives. For these purposes, one unique business will set up by foreign technological cooperation under those limiting conditions.

Natural resources, energy, human resources, capital, indigenous technology and others resources have no value independently and are only of value in combi-

nation.

All independent resources must be integrated into a whole by fertile imagination based on clear ideas. To actualize the plan of a new business, leadership is indispensable. The person in charge of such a project will require ability and a fiery passion to accomplish the project. No person can develop such a skill overnight. It is a rare kind of ability. Only a few people can acquire it by never losing sight of their own lofty aspirations and by research and practice over many years.

The engineers and workers have to master necessary skills through education and training in the field. This skill, learning technology by experience, is the most important aspect of technology transfer. Trustworthy human relations between tutor and trainee are needed for effective technology transfer.

Overseas technological cooperation starts with a request from one organization that has no independent power to develop its own plan. Therefore transfer of appropriate key technology is the core of overseas technological cooperation. For the success of technological cooperation, a basic approach is to search for an optimum solution under the limiting conditions. Technology of every form has a common set of universal principles. Nonetheless, the technology is unique in every instance. Therefore, the appropriate key technology as a solution for the development is also unique.

2. Field Research for Technology Transfer

It is very difficult to grasp the overall view of technology transfer. The evaluation of the project is not easy because of its complexity. The international, political, and economic situations are often very complicated. The advanced country as an offerer of technology and developing country as receiver depend on each other more and more. But they stand in opposition concerning their own interests.

As to operated cooperation, the project is successful from the side of offerer. It is not always evaluated as a success from the side of receiver. The political leaders of a developing country are very sensitive to their own political leadership of their people. To make sure of their own party's profit and to obtain larger amounts of aid from the advanced country, they will often make intentional comments not based on the facts.. These political comments usually bring on fruitless disputes.

The study of technological cooperation as a peace study will overcome the wall of culture and communication gap between different countries. Therefore we must start our thinking on the firm facts in the field. Only the facts in the field will testify the success or failure of the technological cooperation. Then we can observe the unprejudiced total perspective of the project.

A non field-based approach by written documents and books is not enough for the study of overseas technological cooperation. A field science approach focusing on the facts is essential.

Teamwork by Japanese engineers, foremen and skilled workers helped to achieve the transfer, transplant and diffusion of advanced Western technologies in Japan from the Meiji restoration. They succeeded using Japanese craftsmanship based on field oriented approach which began in the Muromachi era.

The most representative case of indigenous development is the success in the construction and operation of a western blast furnace at Kamaishi area in 1857.

Oshima Takato (1826-1901), an engineer succeeded in the construction and operation of a western blast furnace based on only one book imported from Holland. He had a gift for metallurgy, mining engineering, field work and organizing business. He developed scientific research into the traditional metallurgical technology through the support of traditional iron making craftsmen, brick makers, bricklayers and charcoal makers. He applied western engineering theory to the local conditions and the quality and quantity of the local materials.[1)]

Nowadays Japanese engineers have forgotten this traditional way of thinking and behavior in their overseas technological cooperation. They have become idealists taking one pattern of thinking and behavior.

Reviewing the present situation of overseas technological cooperation, in many cases desk plans without any scientific field research are forced on the people who are doing the actual work. Planners make many bad evaluations for the host country's technological potentiality by only comparing with the Japanese standard. This type of cooperation project often leads to problems in the host country in spite of good intentions.

There are often many problem behaviors even in the inspection team dispatched to the host country from Japan. For example, the inspection team make a report on an investigation not based on facts in the field itself, but rather from the view point of the person in charge of technological cooperation on that site.

In this case, the investigator thinks only of their own convenience and gathers limited data which will testify their own ready made concepts and hypotheses. They will not spend enough time to do field research, to think deeply and to scientifically write reports.[2)]

Futhermore there are not enough feasibility studies and intensive follow-up surveys in Japanese technological cooperation. The synthetic follow up survey is

1) Mori Kahei/Itahashi Minamoto (1975) "The Establishment of the Modern Iron Industry -prehistory of Kamaishi Works. (in Japanese) pp. 69-127 Kamaishi Works.
Hanzawa Shuzou (1974) "The Beginning of Japanese Iron & Steel Making" (in Japanese) Sinjinbutsuoraisha
2) Ochiai Hideo (1975)" From Sumatra Wild Plain-Voice of an Agricultural Engineer" (in Japanese) pp. 194-198 NHK Books

indispensable to ascertain the real needs of the people and to promote the cumulative problem solving through the development and transfer of appropriate key technologies For this purpose, the planner must prepare the necessary budget and invest sufficient human power.

Today, Japan as an economic power has to contribute more to international society. For the contribution, Japan must choose an approach to get honorable position in the international situation through prizing partner's good name. The offer of overseas technological cooperation must start by thinking more about problems from the partner's viewpoint.

Technological cooperation contributing to the peace and welfare of mankind has the following structure. One unit of work (project) has the following stages (1) problem finding (2) problem setting (3) F. S. (Feasibility study) (4) planning (structure and order) (5) construction and start up operation (6) technology transfer (7) follow-up survey.

It is desirable that researchers from both sides participate in the project at the stage of F. S.. The person in charge of this project has to promote his own task with a researcher's eye. It is essential to make precise records while conducting this process.

After finishing the technological cooperation, researchers will promote synthetic follow up research to test the results. The main focus of this follow up research is to evaluate the meaning of the project. International cooperation at the level of research activities is necessary for objective and persuasive research.

Not only ODA (official development assistance) by the government but also technological cooperation by the private sector is necessary. All organizations have to disclose information about the project for fair evaluation by the citizens.

The purpose of this paper is to analyze the dynamic process of the development and transfer of appropriate key technology.

The reasons for focusing on the Malayawata Steel Co,. in Malaysia are as follows:

1) The steel industry is a basic key industry of a national economy. An integrated steel mill has complex production processes. Numerous different types of technology are required to control the production process.
2) Malayawata Steel corporation is the first integrated steel mill in South East Asia.
3) Nippon Steel Corporation (then Yawata Iron & Steel Corporation), a representative large Japanese company, set up a joint venture (steel mill) with the Malaysian. The Malayawata project was initiated in 1959.
4) Malayawata Steel uses local natural resources (ron ore, rubber wood charcoal). A new technology which makes rubber wood charcoal for the blast furnace was invented. This unique technology and production system fulfill the

conditions of appropriate technology.

5) Technological instruction by Japanese engineers in the field is finished. The integrated steel mill is operated stably and safely by Malaysians.
6) The records of the Malayawata project were published by the engineers who were in charge of development and transfer of technology.[3)]

Follow up research was conducted by both the Malaysians and by the Japanese.[4)]

The conclusions of several researchers are that the Malayawata project contributed to the industrialization in Malaysia and created several thousand jobs in the local area.

Research methods used in this paper are a literature survey, and interviews with managers, engineers and blue collar workers in Japan and Malaysia.

3. Strategic Decision Making of Investment to Malaysia

There was an important foundation for the technological cooperation to build up an integrated steel mill in Malaya (Malaysia). In 1957, the Japanese government and private companies started the first economic and technological cooperation with Brazil following World War II.

The project was called USIMINAS, an integrated steel mill with 500,000 tons /year crude steel production. At that time Brazilian people had an image of Japan as an agricultural country based on Japanese peasant immigrants who came to Brazil.

This caused a serious image gap, Overcoming the gap, Japanese engineers contributed to build an integrated steel mill for the development of the national economy. Their actions were based on friendship and economic cooperation between Japan and Brazil.[5)] Later in 1964, under-developed countries strongly requested economic and technological cooperation by advanced countries at UNCTAD (United Nations Conference on Trade and Development). The USIMINAS project for Brazilian autonomous development anticipated this 10

3) Mitarai Yoshihiro (1967) "Present situations of Malayawaya Steel" (in Japanese) *TEKKOKAI* 1967 Nov. pp. 21-27
Oiwa Yasushi (1985) "Dairy of the Malayawata Steel Construction" (in Japanese) Shinchosha
4) Lee Poh Ping (1977) "Japan's Decision to Establish Malayawata" V. R. F. Report 1977 IDE Tokyo Chee Peng Lim & Lee Poh Ping (1979) "Japanese Direct Investment in Malaysia" Joint Research Program Seies No. 11 Institute of Developing Economies Tokoy
Torii Yasuhiko (1978) "Investment-effectiveness Analysis of Integrated Steel Plant in Developing Country" (in Japanese) Kokusaikyoryoku Suisin Kyokai Tokyo
Tamura Shuji (1979) "Development of Iron and Steel Industry in Malaysia-Adoptive and Adaptive Transfer of Technology" Workshop on Innovation and Diffusion. University of Michigan
5) Yukawa Masao (1961) "The Prospects for MINAS Steel works" (in Japanese) p. 46-49 *TEKKOKAI* 1961 March.

years in advance.[6)]

In 1957, Tunk Abdul Rahman (1903-1990) assisted by T. H. Tan (1914-1985) succeeded in establishing independence from British colonization. Independent Malaya led by the ambitious Prime Minister Tunk Abdul Rahman started a new nation building plan.[7)] Bureaucrats of the central government created " The First Five- Year Plan " for social economic development for a multi-racial society.

These bureaucrats carefully observed Japanese diplomatic policy and leading company's business activities. The Japanese government wanted to regain respect in the international community as a nation promoting peace in the world. The USIMINAS project was a symbol of this Japanese policy.

At that time, Mr. Inayama Yoshihiro (1904-1987), Vice President of Yawata Iron and Steel Comapny Limited (later Nippon Steel) made several visits to the U. S., Mainland China, India and Europe to secure natural resources, technology, capital and develop product markets in the world. The top officials of Malaya recognized Mr. Inayama as a leading business man.[8)] These leading Malayans (T. H. Tan's group) made a request to Inayama to cooperate in the construction of an integrated steel mill at Kuala Lumpur on his way back to Japan from Europe in November 1958.[9)] Mr. Inayama accepted this proposal informally. Prime Minister Abdul Rahman asked him to set up a new steel mill during Inayama's second visit to Kuala Lumpur in February 1959. Mr. Inayama accepted Prime Minister Rahman's proposal as a representative director of Yawata Iron and Steel.

Inayama's basic plan was to develop direct reliable relationships with key persons in the world. In the first stage, he made an effort to set up a human network. At the next stage, he did strategic decision making to develop a new business with these acquainted foreign key persons. His colleagues', directors of Yawata, did not object to his lofty idea of cooperation with developing countries.

---

6) JAPAN-USIMINAS Corporation (1969) " Ten Year History of the company " (in Japanese) Tokyo

7) Tunk Abdul Rahman Putra (1977) " Looking Back-The Historic Years of Malaya and Malaysia "
" T. H. Tan is a name that will long be remembered by Malayans of pre-Merdeka days and those who are alive today ".
" To me, T. H. Tan will always be associated with our first successful mission to London."
Obituary on Tan Sri. T. H. Tan by the Tunku
The Star November 5, 1985.
Hagiwara Yoshiyuki (1996) " Rahman and Mahathir " (in Japanese) Iwanami Shoten

8) Later Inayama grew as a big " steel man ". *BUSINESS WEEK* 1962 September 29.
STEEL (Nippon Steel : Anatomy of a Giant) 1962 December 24.

9) Inayama points out that this meeting was exquisite timing "
Lee Poh Ping (1977) " Japan's Decision to Establish Malayawata " p. 10 V. R. F. Report. 1977
Institute of Developing Economies, Tokyo
" Honooto tomoni-History of Yawata Iron and Steel " (in Japanese) p. 745

Based on Japanese historical experiences of building steel mills, the government usually invested large amounts of capital in the project. It is not profitable to build a steel mill from a commercial perspective because of the huge initial investment. The industrial infrastructure is especially important. Therefore it was natural that the directors did not agree with Inayama's plan of technological cooperation to Malaya. For a private company the issue of profitability is key. The profitability of technological cooperation through joint venture is difficult to estimate. The political and economic conditions in the host country and the complex international situations directly affected on the project. Country risk made the top officials of Yawata cautious to make such a decision.

In November 1955, the Brazilian government requested to the Japanese government to cooperate in the foundation of the steel industry in Brazil. In June 1957, Japan-Brazil joint venture steel company agreement was signed. In January 1958, USIMINAS started. In August 1959, construction of the plant blast furnace was started. All Japanese leading companies including Yawata Iron and Steel participated in this project.

Japanese companies learned many lessons from the experiences of USIMINAS project about overseas technological cooperation. These lessons includeed :.

(1) To set up a mutually trustworthy relationship between partners
(2) To set up long-term continued cooperation
(3) Both sides must have an enthusiasm for technology transfer. To maintain this atmosphere, it is necessary to set up a concrete system.
(4) For the host country, the transfered technology must be adopted based on an objective evaluation of its own technological abilities.[10)]

These conditions are present during the progress of the project. Many mistakes occured in the field of technology transfer.

At that time the experiences at USIMINAS were not totally considered. Therefore it was not common understanding among the directors of Yawata that the Rahman-Inayama mutual trustworthy relationship was the foundation of the project. Management staff of Yawata could not forsee a positive outcome for this project.

The gathered data on political and economic conditions in Malaya suggested impossibility. There was no feasibility judging from the short-term profitability. The production volume of the steel mill was 100,000 tons/year, the same amount as the demand in the Malayan Federation. This was only one week's production volume of Yawata in 1960. There was no expectation of profit for the investment of more than one billion Yen. Yawata invested only about 200 million Yen

10) Oishi Shoji (1977) "Hardship at USIMINAS is living today" (in Japanese) *Nippon Steel* 1977

to each of its 18 related companies. Yawata invested merely 380 million Yen for the USIMINAS project.[11)]

Most directors of Yawata evaluated this project as a risk based on cost/benefit analysis of investment. Vice President Inayama explained his ideas and plan to the directors of the company. He suggested that "Malaya has helped the Japanese steel industry by supplying iron ore up to today. Owing to this supply, the Japanese steel industry has recovered and been reconstructed from the ruins of the World War II. Therefore this time, Japanese must help Malaya's industrial development." "It is a core problem of how to raise the level of living standard for 3 billion people in under-developed countries. People in advanced countries have a duty to give back to the people in under-developed countries." Inayama believed that people with opposition today would support the plan after 10 years. He took action regardless of the company's short-term profit.[12)]

His "top down" style of leadership for strategic decision making was different from the ordinary Japanese consensus formation, "bottom up" style, in the company. "The idea is first, the business is second" was his approach to the issue. The idea was that economic and technological cooperation has to be done understanding the partner's perspective and to benefit the partner. The first objective was to construct a feasible steel mill and the second was to build an autonomous management oraganization for profit.

Inayama's basic idea was that Yawata would be responsible for the technology transfer to Malaya. Ideally, the Japanese government on behalf of the Japanese people would promote the cooperation, since the project has to be done supported by international public opinion.

For this reason, Yawata did not make 100% direct investment in Malayawata.

(1) The structure of the company was a joint venture. To respect the partner's subjectivity, the Malayan side was given the majority stock of 51% and the Japanese side had 49%. Malayawata Steel was registered as a private company on October 10th, 1961. The company was changed to a public company on April 28th, 1966 at Kuala Lumpur.
(2) They also decide to allow the participation of other companies.
(3) It was also decided to use the capital of OECF (Overseas Economic Cooperation Fund) set up in 1961 by the Japanese government.
(4) To use the capital of IFC (International Finance Corporation) set up in 1957.

Responding to this request, IFC decided to invest $ 2.45 million in the form of a 12 year loan and a share subscription of M$ 3.119 ($ 1.01 million equivarent).[13)]

11) Yawata Iron & Steel "Financial Statement" (1960 & 1961 edition) Okurasho Insatukyoku
12) Interview with former Vice President of Malayawata Steel, Mr. Sakai Yoshio (Nov. 1978)
13) IFC Annual Report 1968

With regard to the 4th item, Mr. Inayama visited Washington to meet Mr. Sherman Adams (Special Advisor to the President) in February 1957.

He received positive comments from highly ranked officials to supply scrap, technology, information and capital to Japan. Judging from the comments, Inayama believed that the American government would not interfere with Japanese business activities in South East Asia.[14] This laid the foundation for the success of the project.

4. Development of Appropriate Key Technology

T. H. Tan group and Yawata Iron and Steel finally reached an agreement that the production capacity of new steel plant be 100,000 tons/year. For the engineers of Yawata, the real problem was how to actualize the production itself and determine the kind of steel production technology and system.

They had to decide what was the best technology using local low quality iron ore for 100,000 tons/year production. The technology had to realize the same productivity as a big integrated steel mill in advanced countries.

There were several types of production systems:

(1) Rotary kiln+electric furnace
(2) Open furnace steel making
(3) Small size blast furnace by coke

There were too many difficulties to obtain efficient production due to electric energy, scrap and production costs. There was no feasibility to use these types of production technology.[15]

The gap between market size and a prestigious big scale integrated steel mill could not be solved by the usual scale down approach. The problem was solved by the development of an original appropriate key technology "blast furnace using rubber wood charcoal". This system was invented by Mr. Oiwa Yasushi, engineer of Yawata. Before participating in the Malayawata project, he stayed in Singapore from February 1956 to July 1959 as a manager of JETRO's office.

He developed field research for numerous developed or undeveloped iron ore mines, tin mines, bauxite mines and rubber plantation located in Peninsular Malaya and Singapore. He also visited the neighboring countries of Singapore in South East Asia. He was able to observe how South East Asian countries which gained independence after World War II, were engaging in their respective national economic development. He had discussed the issue of the development of mineral resources in South East Asia with local mining experts, governmental

14) Inayama Yoshihiro (1965) "My curriculum vitae" (in Japanese) *Nihonkeizai Shinbun* 1965. 4. 13
15) C. A. Schneider (1974) "Comparative analysis between blast furnace+LD Converter system and Electric steel making system" p. 85-92 *Tetsu to Hagane* Vol. 60 No. 5

economic development officials, scholars and leading business men. Through these experiences, he found that bureaucrats, military men, the royal family and overseas Chinese were becoming a new power of economic development. This was an unprecedented phenomena which nobody would have imagined before the last global war.[16)]

Next he spent one year from 1959 as a research fellow at Colorado School of Mines. He wrote one book with two associate Professors, Dr. O. Lentz and C. Nordquist. The results of the joint research project were published in book form under the title "The Mineral Industry of Japan and South East Asia" in October 1961.[17)] In this book, Mr. Oiwa pointed out that the undeveloped mineral resources in South East Asia could be developed by the combination of Japanese market, technology and capital. New international cooperation could develop the possibility of autonomous development of the national economy.

In December 1962, when he had engaged in propelling the Malayawata Steel project to implementation, he expanded the results of his research activities in America. He worked out a unique and original methodology to organize any business enterprise that was to be a main body of a given natural resource development venture.

Elaborating on his methodology, he made clear the eight indispensable requirements in the organization of every such enterprise as follows:

(1) To make sure a planned enterprise would really contribute to the autonomous stabilization and overall development of a given country possessing the natural resources to be involved by the enterprise
(2) To make sure a planned enterprise would go well along the lines of economic development policy in the newly rising country
(3) To make sure of the participation of local capital and local entrepreneurs in a planned enterprise
(4) To make sure a planned enterprise would be based on a well-coordinated plan for the development of given resources
(5) To create a foothold in a planned enterprise for the possibilities of international introduction of capital
(6) To make sure a sufficient overseas market exists for any mineral product of a planned enterprise
(7) To make sure a planned enterprise would be a parent organization of the

16) Oiwa Yasushi (1959) "Malaya in transfiguration" (in Japanese) JETRO, Tokyo.
17) Yasushi Oiwa, C. Nordquist and O. Lentz (1961. 10) "The Mineral Industry of Japan and South East Asis" Colorado School of Mines Press.
O. H. Lentz (1962) "A Sequel to the CSM-South East Asia Study" Colorado School of Mines
Dr. Lentz prized the joint reseach as a pioneering contribution to the whole literature of economics of mine as seen from many different viewpoints.

metallurgical industry and machinery industry into which it should be developed in near future

(8) To make sure a planned enterprise would be an education and training center for the engineering and managerial leaders of the enterprise.[18)]

These eight points of his methodology represented the ethical principles for the development of natural resources, development of industries and international technology transfer. Therefore they have constituted a guideline for every problem-solving activity in the propulsion of the Malayawata Steel project. This project actually represented a concrete realization of the first major mineral resource development venture in Malaysia after World War II.

Fundamental principles, such as the above-mentioned methodology, are of no less importance than the cost/benefit analysis in any overseas technological cooperation project. Usually the profitability of the project has priority over the basic principles of contribution to the development of the regional society and the national economy involved, and ultimately to the good of global society as a whole. If any overseas cooperation project lacked sufficient awareness of these principles, it would be difficult to obtain the necessary understanding or acceptance by the people involved. However it will be payable in accounting terms.

In the Malayawata Steel project, a basic managerial principle titled "Japan's Contributions to Malaya" put forth by Vice President Inayama was combined with the methods created by Mr. Oiwa. It was this newly invented guideline that helped make technological cooperation successful by overcoming all difficulties in the Malayawata Steel project.[19)]

At the first stage, the Simamura mission sent by Yawata in 1961 made a proposal of a new steel plant to T. H. Tan's group. It was a rotary kiln+electric furnace system. This plan was accepted tentatively by the group using local iron ore for the production. But the group continued to ask for the construction of a one million ton integrated steel mill. Inspite of their ambition, there was only low quality coal, not suitable for iron making in the Malayan peninsula.[20)]

Unfortunately, the engineers in charge of the Malayawata project found that all of the ready made technology and production systems were not suitable. The Malayan mono-culture economy also lacked the necessary industrial infrastrucuture.

---

18) Oiwa Yasushi (1963) "Development of Mineral Resources in Southeast Asia" (in Japanese) *NIHONKOGYOKAISHI* p. 74 Vol. 79, No. 896 Feb. 1963

19) Oiwa Yasushi (1985) "Diary of Malayawata Steel Construction" (in Japanese) Shincho Sha.

20) The Malayan Colieries produced coal in the Batun Aran area for the power plant of the Malayan rail-way company.
Matsuo Hiroshi Ed. (1962) "Economic Development in Malaya and Singapore" (in Japanese) p. 320 Institute of Developing Economies.

Exploring the suitable production technology and system was a difficult task that took a long period of time. Finally, Mr. Oiwa had an idea of a " charcoal blast furnace system ". During his stay in Malaya and Singapore, he used to see big fires at many rubber plantations for the replantation of rubber wood every March and April. He thought it was wasteful to let a big tree burn like that.[21)]

At just this time, he found a paper titled " Pulp and Paper Manufacturing in Malaya " in a magazine " Mayalan Forester " published by the government.[22)] This paper suggested the possibility of charcoal made of rubber wood. Until then, rubber wood had been regarded as the worst material for charcoal making. He developed a test of whether rubber wood could be made into a good charcoal. The experiment was done using a local Malayan (Matan) kiln system with low temperature carbonization process for 30-50 days.

The results were satisfactory. It testified that rubber wood would be a good material for charcoal. He believed in the possibility of a blast furnace using rubber wood charcoal. The next problems were the volume and stability. The operation of the blast furnace of 160-200 tons/day production uses a huge volume of charcoal. And the necessary volume must be supplied stably from the neighboring area of the plant site " Prai ".

Then the Wood Distillation Charcoal Iron & Steel Co., at Wundwie in Western Australia operated two charcoal blast furnaces. In 1961, the company produced 52,000 tons of pig iron using eucalyptus charcoal.[23)]

A chemical component, lignin of rubber wood is similar to eucalyptus. Lignin is an important component for the hardness of charcoal. On the basis of the similarity of chemical component, rubber wood can be made into good charcoal. The scientific test for the rubber wood charcoal was put in practice at the central research center of Yawata Iron and Steel. This test proved that rubber wood charcoal is a good charcoal with enough fixed carbon for the operation of a blast furnace.

In this way the difficult problems from technologically unknown factors were overcome step by step using data from field research and scientific experiments. Thus engineers could draw the overall design of an integrated steel mill using the rubber wood charcoal blast furnace.

The small size traditional Mayayan (Matan) type charcoal making kiln and technology had to be improved for large scale production.. Because this kiln

---

21) Oiwa Yasushi (1981) " The beginning of Charcoal iron making in Malaya " (in Japanese) p. 51 *TEKKO KAI* July 1981

22) J. D. Peel (1960) " Pulp and Paper Manufacturing in Malaya " *Malayan Forester* Vol. 23. No. 1 January. 1960

23) Oiwa Yasushi (1980) " The chronological history of Malayawata Steel " (in Japanese) Unpublished Mimeo
Then more than 40 units of chacoal blast furnaces were operated in Brazil.

was made from charcoal of mangrove only for cooking use. The appropriate key technology was developed by the organic integration of local resources, traditional local technology and most advanced theory and practice.

Japan posesses one of the world's most eminent charcoal making technology. Engineer Oiwa applied " Mimura Charcoal Making Theory " for the development of the traditional Malayan system.[24] He scarcely succeeded in constructing a mass production system of charcoal by the newly developed technology for the operation of the blast furnace.

7 kiln centers were constructed within a radius of 48 Km of the Malayawata Steel plant at Prai. Each center was separately located at a district with a dense rubber wood plantation.

The conditions of the location for kiln center were as follows:

(1) There are many rubber wood plantations with more than 3000 acres within a radius of 16 Km of the center. The plantations will be the main rubber wood

Fig. 1 Material Supplying Areas for Malayawata

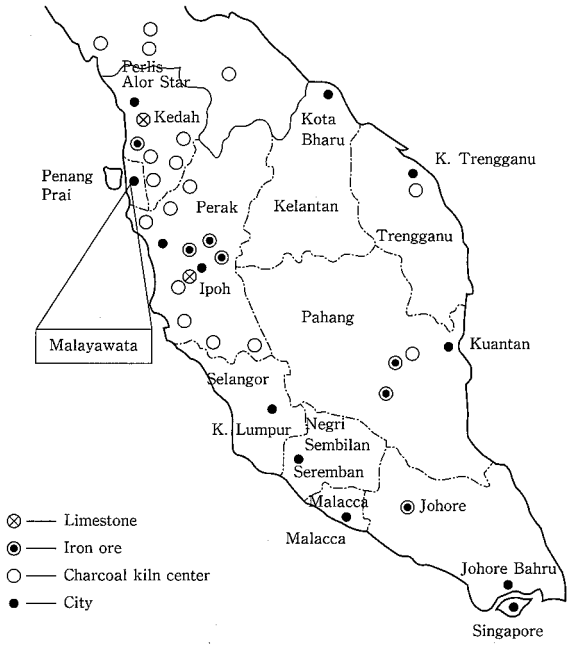

〔Source〕 Malayawata Steel.

24) Miura Ihachiro (1943) " The study of Charcoal " (in Japanese) Kyoritu Shuppan Sha." Professor Jyokichi Kishimoto, Tokyo University of Education supported this R & D process.
He was the successor of Miura Charcoal Making Theory.
Yasushi Oiwa & Jyokichi Kishimoto (1973) " Studies on the Chacoal Making process with Rubber wood as Raw Material for Integrated Steel Mill in Malaysia " *NIHONRINGGAKAISHI* Vol. 55, No. 5

supplier.

(2) At the same time, small holders will be expected to supply rubber wood to the center

(3) The site faces the highway or is next to it. The transportation of the materials must be convenient by rail

(4) The workforce would be hired from the local area.

(5) Firm land for kiln. To avoid a low and damp area so that there is no river swollen by rain in monsoon season

(6) There is a good water supply for the operation. It is easy to construct electric wire and telephone wire

(7) Size of land for site must be 10 acres at a minimum[25] (Fig. 1)

5. Employment and Education & Training of Engineers and Technical Assistants

(1) Employment of Engineers and Technical Assistants

In Malaysia, a University graduate can qualify as an engineer. A graduate from a " Technical Institute " is only given a job of " Technical Assistant " (T. A.) even if he is highly talented with engineering abilities.

This difference is rigid. Qualified engineers have the privilege of their own office room and secretary. This type of " Armchair engineer " is very popular in Malaysia.

These engineers have the characteristics of technocrats having knowledge and information of British Standard (BS) and technical books which are strongly influenced by British custom. Desk work (thinking, designing, planning and supervising) are clearly divided from manual labor (practice in the field).

The National University of Malaya and the Universities of the Commonwealth of Nations were the only institutions authorized as " University ". A graduated from a Japanese University, a Taiwanese University and other Universities is not officially recognized as a " University graduate ".

The problem solving activities of construction and operation of the mill doesn't require superficial knowledge based on technical and law books, but rather the real abilities to practice in the field.

This school system based on standardized knowledge and the qualification system were obstacles for technology transfer. The traditional Malaysian skill formation system in firms does not always develop the practically experienced engineers. Japanese engineers in charge of the Malayawata Steel project wanted to hire the most talented persons with engineering skills. They visited Univer-

25) Oiwa Yasushi (1968) " Promoting the Charcoal Making Project in Malayawata Steel Project " (in Japanese) p. 100-101 Yawata Iron and Steel Co,.

sities to recruit and put a want ad advertisement in the papers in Malaysia, Singapore, and Japan.

In keeping with Malaysialization government policy, they wanted to employ as many young Malayan as possible. But there were few students in the engineering course in the University of Malaya.[26] Students liked white collar desk work and did not like "dirty jobs" and "shift work" in the manufacturing industry. Even they could not make a concrete image of the steel industry, a new industry in Malaysia. The wage level of newly employed governmental officials was higher than that of Malayawata employees. In spite of these bad conditions, many ambitious applicants wanted to get a job at Malayawata.

The employment examination was composed of a health exam, basic scholastic ability, technical knowledge and character test by interview. As a result of these exams, only one Malayan engineering graduate from Singapore Institute of Shipbuilding was employed. 6 students were employed directly from Universities and 12 persons from other companies were hired as engineers. As for technical assistants, 29 persons were employed. Their school background is shown in Fig. 2. They were placed in 7 different workshops shown in Fig. 3. The maldistribution of human capital became a restriction on the initial conditions of socio-economic development.

Based on the preconditions of the existing social structure and division of work in Malaysia, the employment and placement of employees was carried out.

(2) Education and Training of Engineers and Technical Assistants

Fig. 2 School background of Trainees

School	Engineer	Technical Assistant
University	18*	5**
Technical College	0	3
Technical Institute	0	14
Polytechnic	0	5
High School	0	1
Total	18	29

[Note] *Engineer

University of Malaya	4 persons
Nanyang University	2 persons
Japanese Universities	3 persons

**Technical Assistant

Nanyang University	2 persons
Taiwan University	2 persons
Cheng-Kumh University	2 persons

26) Malaysian Government: "Statistics of Education" 1970 & 1971

Fig. 3 Trainees of Malayawata Steel

Speciality / Ethnicity / Factory Workshop	Engineer			Technical Assistant		
	Malay	Chinese	Indian	Malay	Chinese	Indian
Blast funace	1	3	0	0	4	0
Sintering	0	3	0	1	2	0
LD converter	0	2	1	1	6	0
Rolling mill	0	3	0	1	5	2
Power plant	0	1	0	0	2	0
Maintenance shop	0	2	0	0	3	0
Analysis & Test	0	2	0	0	2	0
Subtotal	1	16	1	3	24	2
Total	18			29		

i) Development of Education and Training System

Before the beginning of the Malayawata Steel project, 14 persons from the Asian Productivity Organization (APO), 16 persons from USIMINAS in Brazil and 18 persons from developing countries were trained at Yawata Works.[27)]

In June 1965, a special committee was organized for the project. From the experiences of education and training at Yawata and USIMINAS, the committee came to the conclusion that it would be a better method to give priority to practice and to learn operation work by experience as much as possible. The aims of education and training were listed as follows:

(a) to understand the function and structure of the main machine and apparatus to develop basic skills to operate and to maintain

(b) to understand the work process involved in the main production process. To learn the techniques by experience for operation control (basic data and control chart)

The company prepared the education and training at Yawata Works. The staff paid the closest attention to the following 5 items:

(a) Trainee's attitude toward learning

(b) To create high quality teaching materials and a program that would be suitable for trainees

(c) To train instructors with high technical ability and human skills

(d) The adoption of a man to man on-the-job training method

(e) Maintaining the trainee's surroundings so that there is high morale to study

The target of education and training for engineers was as follows: to provide basic information and knowledge about the steel industry. To provide the

27) " Honooto tomoni-History of Yawata Iron and Steel " (in Japanese) p. 737-744

training of operation techniques with the most similar machine and apparatus to Malayawata Steel. To help trainees develop basic skills to go smoothly into the new Malayawata steel plant. The training term was about 10 months.

The target for technical assistants was as follows: The work standard and quality standard for the new mill were already prepared. Based on these standards, education and training would be developed directly linked with operation. The term is about 4 months.

ii) Development of Teaching Materials

Fifty new textbooks (pig iron making, steel making, rolling mill, power plant, electric maintenance, mechanical maintenance and test & analysis), with a total of 4260 pages were edited in accordance with Yawata's infirm training course for foreman and skilled workers.[28] Technical term booklets were also edited for each workshop. For example, a booklet for the rolling mill was composed of 62 pages including 1600 technical terms. The booklet explains in Japanese and in English details as to production technology, machinery, apparatus, and work.

These booklets were effective in guiding on-the-job training.

Fig. 4 Education and Training Program for the Trainees of Malayawata Steel

		Engineer	Technical Assistant
Japanese Language Course		5 weeks	5 weeks
Study tour		5 days	5 days
Date: Arrival at Yawata Works		1966. 3. 18	1966. 9. 9 (1st Group) 1966. 11. 11 (2nd Group)
Education & Training Term	Introduction	2 weeks	1 weeks
	Practice	9 months & 2 weeks	3 months & 3 weeks
Textbook		50 types (in English & Japanese)	50 types (in English & Japanese)
Instructor		Member of Malayawata Group Will be dispatched engineer	Member of Malayawata Group Will be dispatched engineer
Contents of Education & Training		Basic theory Practical operation management	Operation of machine & apparatus Practical work of operation
Place of education & training		Yawata works Associated companies	Yawata works Associated companies
Date: Departure from Japan Arrival at Malayawata		1967. 1. 13	1967. 1. 13 (1 st Group) 1967. 3. 24 (2 nd Group)

28) Nippon Steel (1980) "80 Year History of Yawata Works" (in Japanese) p. 524

In October 1966, a booklet of everyday conversation in English and Malay was published. This contributed to smooth communication.

iii) Education and Training

An outline of education and training is shown in Fig. 4. Before the start of infirm training at Yawata works, *Kaigai Gijutusha Kenshu Kyokai* (The Association of Overseas Technical Scholarship, AOTS) in Yokohama offered a Japanese language course. This course contained Japanese language, an outline of the Japanese economy, society, culture, industrial technology, study by factory observation and study tour.

The majority of trainees could understand Chinese characters (*Kanji*). This was an advantage for trainees to learn Japanese.[29)]

This introduction course provided the trainees with good information and experiences to understand Japanese industry and technology.

For the execution of education and training at Yawata works, in total 58 engineers and skilled technical assistants were at first appointed as instructors and staff to be dispatched to Malaysia. (Fig. 5)

A 6 month English conversation course was heled. A one week retraining course was also held for skilled technical assistants because they had to review and check their own basic knowledge and skills, for the instruction, construction, and start up of operation. The project required accurate knowledge, skill, and powerful teamwork.

The target was to develop engineers and technical assistants with a field oriented way of thinking and certain technical skills and also possessing good teamwork skills.

Fig. 5 Dispatched Staff for Production Process (1967. 1)

Production Process	Number of Persons	Position		
		Superintendent	Assistant Supt.	Technical Assistant
Blast furnace	7	1	1	5
Sintering	4	0	1	3
LD converter	10	1	1	8
Rolling mill	17	1	1	15
Power plant	5	1	0	4
Maintenance shop	9	1	1	7
Analysis & Test	6	0	2	4
Total	58	5	7	46

29) Report of course execution. 1966. March, September, November. *Kaigai Gijutusha Kenshuu Kyokai* (The Association of Overseas Technical Scholarship)

Fig. 6 Training Schedule for Malayawata Blast Frnace Trainees (1966. 4-1967. 2)

Kind of Training \ Year/Month	'66 4	5	6	7	8	9	10	11	12	'67 1	2	Note
I. Fundamental Training												A. M.: Lecture P. M. Visiting Plants Training area is Higashida Blast Furmace Plant Report is to be submited for every item. Free discussion is to be done.
(1)Outline of iron-making												
(2)Blast Furnace operation												
(3)Material chnaging operation												
(4)Blasting operation												
(5)Gas purifing operation												
(6)Other operations												
II. Study of Malayawata Blast Furnace facilities			Outline							Detail		Examining spec. & plans
III. Practice at plant												Study at Higashida BF plant
(1)Blast Furnace operation												
(2)Raw material operation												
(3)Blasting operation												
(4)Gas purifing operation												(5)*Teikoku Steel Works Iwate Charcoal Co. Sanei Tekko Co.
(6)Visiting other companies												
IV. Ingot operation												Observe reformation and ignition of BF No. 1 (Nov. 14, 1996) Examine the plan of Malayawata No. 1 BF ignition
(1)Drying of hot stove												
(2)Changing iron ore												
(3)Ignition operation												
V. Production control etc.												Raw material planning. produciton planning production control, operation control

[Source] Yawata Works

The engineers of the blast furnace plant commented that Malaysian trainees have basic skills and they would be able to acquire the necessary techniques and skills if they were given good encouragement and guidance. Therefore, trainees were asked to write a " Practical performance report " in English everyday. The engineer, technical assistant and manager of the plant could check the trainee's growth and development through the report. They wrote detailed answers to questions by trainees. They readjusted the next day's training program to the trainees' progress. In the final stage of the course, the trainees were able to understand the essential points of steel making technology. The trainees had already started to overcome the " armchair engineer mentality ". (Fig. 6 & 7)

Fig. 7 Training Shedule for Malayawata LD converter trainees

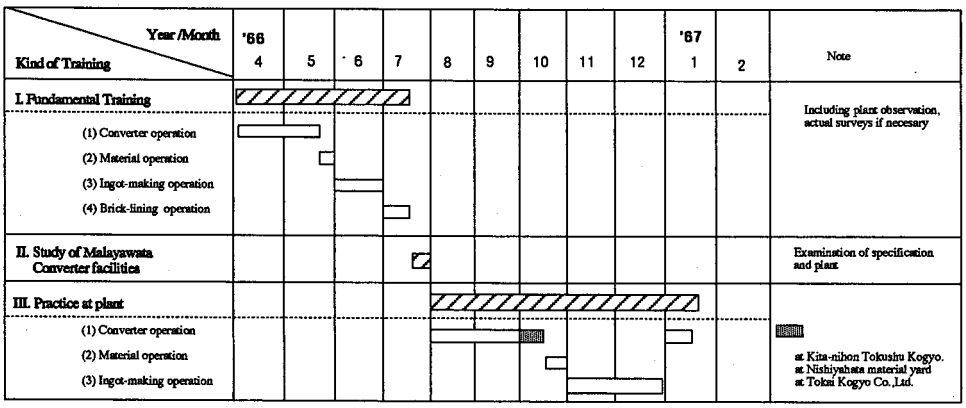

[Source] Yawata Works

6. Construction of the Integrated Steel Mill

i) Design of the Plant

The design of the plant aimed at overcoming the disadvantage of the production scale, 100,000 tons/year. From the standpoint of material handling and energy control, the production process must be compact and allow continuity.

Top management decided to install high performance machines and apparatus. It was important to realize high productivity, to reduce the production costs and to strengthen the product's competitiveness in the market.

The design conditions of the plant were as follows:

1) The plant would be able to operate using Malaysian level skill and technology.
2) The price of the plant must be cheap.
3) Total plant design and layout must have allowances for the capacity expanding in the future.

Twelve alternative designs for rolling mill were planed and investigated.

The layout was uniquely characterized as follows. The blast furnace and LD converter were located under the same roof. This layout saves construction

Fig. 8 Outline of Malayawata's Plant

Production Process	Plant	Specifications
Blast Furnace	Blast furnace	1 unit charcoal blast furnace 145 m³
	hot stove	3 units
	gas cleaning plant	1 set 20000 Nm³/H
	raw materials treatment	1 set 60 T/H
Sintering Factory	Sintering plant	1 unit 13 m² 260 T/D main gas discharge machine 360 KW
Limestone Oven	Limestone oven	2 units vertical type 10 T/D Main ventilator 22 KW
LD Converter	LD Converter	2 units 12 T/CH mobile type
	iron storage pit	2 units 80 T
Rolling Mill	Reheating furnace	2 units 2 belts continuous system 25 T/kr
	Roughing mill	2 units 3 high roll Ac 750 KW
	Intermediate mill	4 units 2 high roll Ac 1000 Kw
	Finishing mill	6 units 2 high roll Ac 1200 KW Ac 500 KW
Incidental Facilities	Oxygen generator	2 units 500 m³/H
	Boiler	2 units 1.5 T/H
	Electricity Receiver & Supplier	1 unit 11/3.3 KV 4500 K*2 V

costs while at the same time maintains the continuity of the process for material handling and energy saving. The newly developed LD converter with body exchange system was introduced for the steel making process. Outline of Malayawata's plant is shown in Fig. 8. The production flow sheet is shown in Fig. 9.

ii) Construction of the Plant

The engineers applied their experiences of constructing steel mills in Japan to the overseas technological cooperation. Workers for plant operation and maintenance were involved in the construction of the plant as early as possible, since workers can obtain real knowledge and skills by being directly involved in the construction, and start-up work. In June 1967, full-scale construction started as shown in Fig. 10.

Engineers and managers from Yawata Iron and Steel and engineers from a Japanese plant maker were sent to Prai, the construction site. In total, 87 persons in 1967 and 157 persons in 1968 were sent to Prai (Fig. 11). Yawata staff accounting for 121 Man/Months were used for the construction work. Staff for the operation and operation guidance accounted for 1413 Man/Months. Staff for engineering control and engineering accounted 541 Man/Months. Staffs for man-

Fig. 9 Malayawata Steel Production Flow Sheet (Phase I)

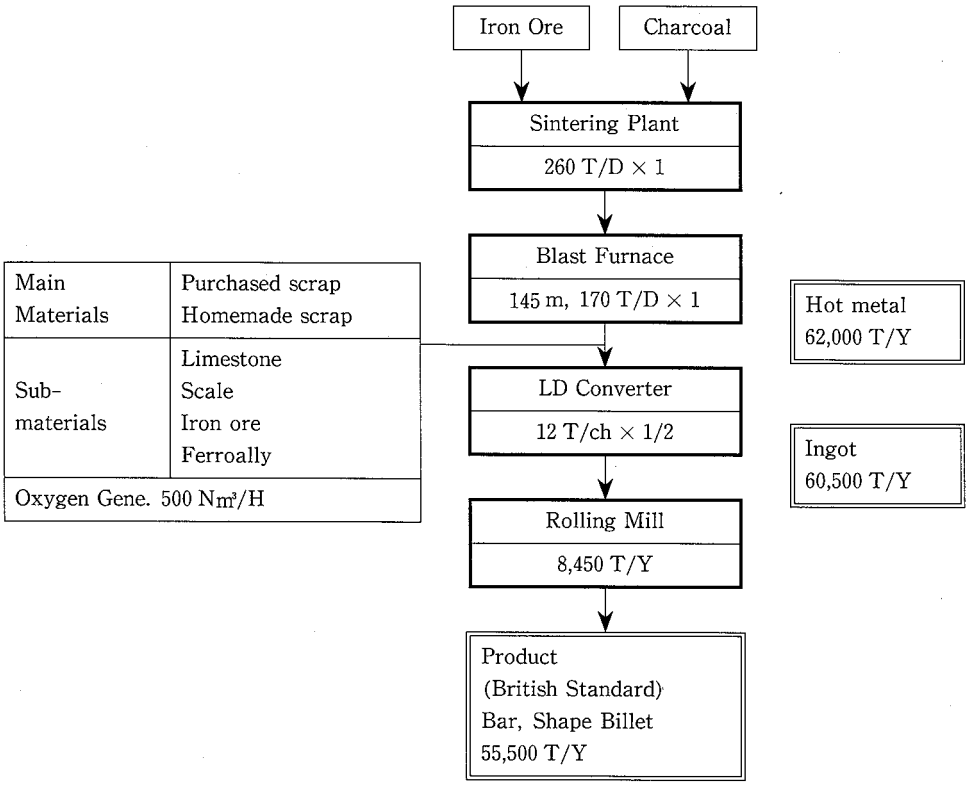

agement accounted for 473 Man/Months as shown in Fig. 12.[30]

iii) Preparation for Start-Up

Vice-President Sakai decided on the following basic policy for start-up. The managers have to accept the concept of 100,000 tons/ year and to manage the company with a sense of small business. Frequency of the breakdown in the early stage, was the most difficult problem for the start-up. This technological problem can not be estimated. The total level of skill and engineering required for maintenance was unclear. This was a key.

In May 1967, one year and two months after the start of construction, the rolling mill was finished. After that, the blast furnace, LD converter and other plants were finished on schedule. In total, a staff accounting for 2548 Man/ Months were dispatched from Yawata. The key management positions were filled by Japanese staff and the subordinate position by Malaysian staff for the

30) Nippon Steel (1981) " Honoo tomoni-History of Yawata Steel " (in Japanese) p. 750

Fig. 10 Malayawata Construction Work

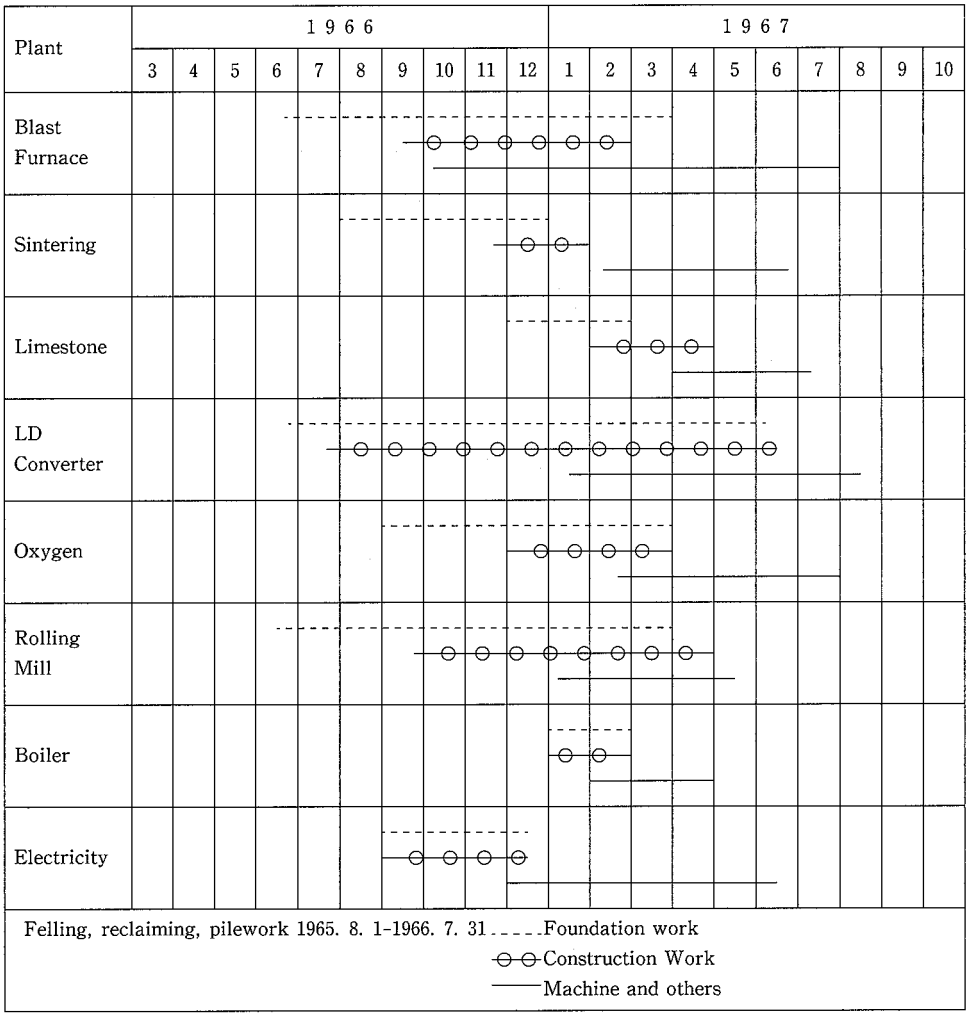

[Source] *TEKKOKAI* 1967. 11

start-up and technology transfer.[31)]

Engineers trained in Japan played the important roles of coordinators, interpreters and translators of standards of technology and work. Technical assistants trained in Japan also reviewed the textbooks and checked work standards before construction and start-up. Technical assistants (T. A.) and newly employed workers had to be trained using the actual machines and apparatus of Malayawata Steel.

The training for the rolling mill was conducted as follows:

31) Interview with former Chief Engineer, Mr. Nakagawa Hajime (at Yawata Works, 1978 July)

Fig. 11 Dispatched Staff to Malayawata

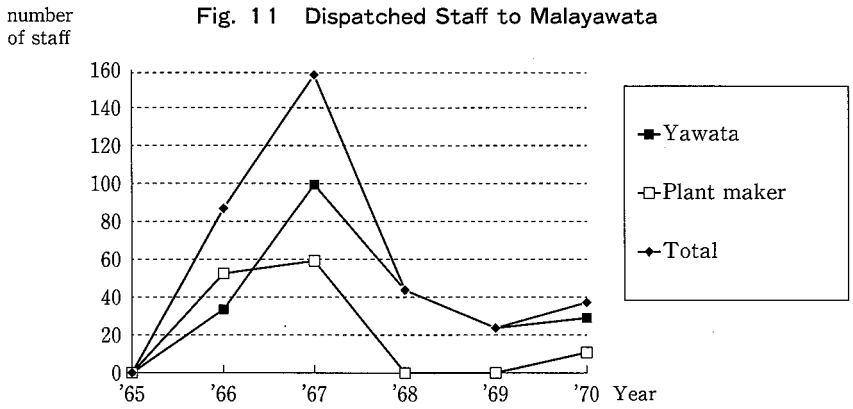

1) Mastering the operation techniques of machines by handling simulation
2) operating the actual rolling mill without materials
3) learning the emergency stop operation to prepare for an emergency

The education and training of 3 technical assistants (T. A.) and 32 workers in charge of rolling mill was put into operation from March to April in 1976 before start-up.

Japanese engineers were busy at workshops making instructions for on-the-job training. The channel of instruction is shown in Fig. 13. Japanese technical assistants who were not good at English set an example on the spot for the Malaysian unskilled workers. Their approach to training (OJT) was to set an example through their own activities at the workshop.

Malaysian T. A. contributed to this OJT as coordinators and interpreters. Malaysian T. A. mastered the operation techniques under the guidance of Japanese T. A.. After mastering a desirable level of skill, Malaysian T. A.

Fig. 12 Dispatched Staff to Malayawata (1965. 5-1970. 3)

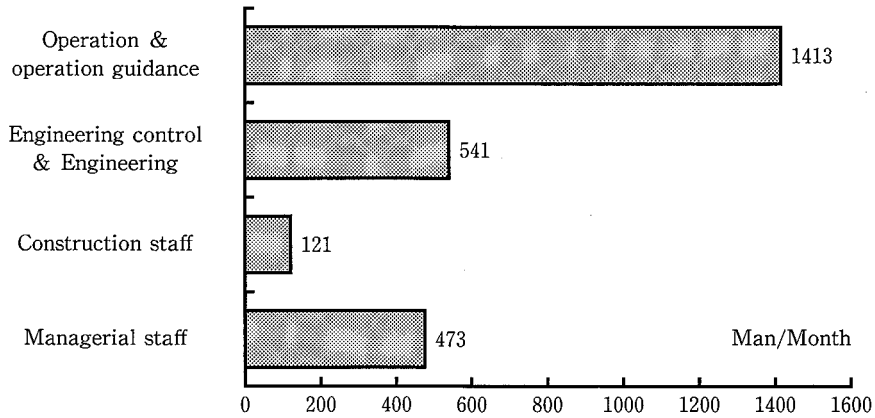

began to guide the unskilled workers.[32)]

Fig. 13 The Chain of Instruction at Plant Level

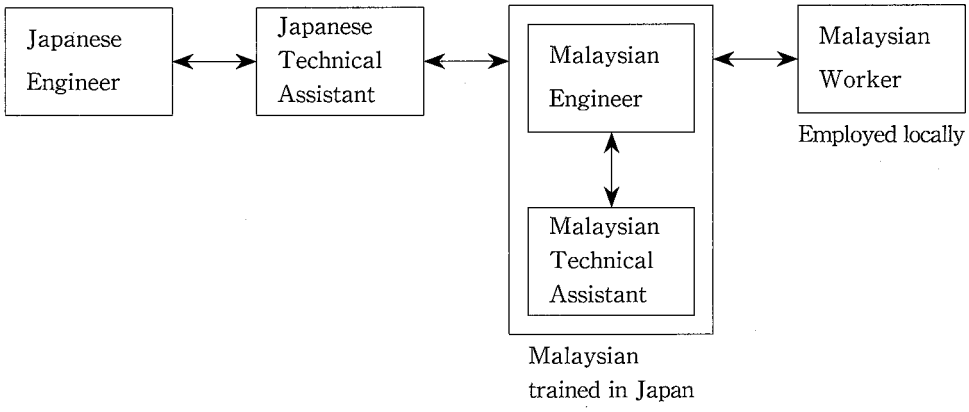

7. Start of Operation and Technology Transfer

i) Start-up

On May 20 1967, the rolling mill started a test run. On May 27, the rolling mill succeeded in continuous operation and produced 3/4 inch (19 mm) steel bars. In July, the Malayawata Charcoal's kiln centers located in the neighboring areas of Prai started to supply charcoal for the materials of the blast furnace. The difficult problems at the beginning, were the charcoal for the blast furnace, the production volume, quality, cost and stability of supply. The pioneers overcame these difficulties through their efforts. Local miners supplied low quality iron ore sufficiently. The preparation for the operation of the blast furnace finished. On July 20, the sintering plant started to produce sintered ore.

On August 1, the blast furnace, the symbol of the first integrated steel mill in South East Asian countries started to operate. On August 14, the first LD converter also started to operate. Finally the integrated steel mill system from upstream (kiln center) to downstream (rolling mill) was established.

Malaysian engineers contributed much to the preparation of start-up. For example, engineers did not leave their duty at the LD converter workshop at the beginning of operation. They slept only one hour a day for 4 days.[33)]

ii) Technology Transfer and Management Organization

The chief engineer supervised 3 main factories (blast furnace, LD converter and rolling mill) and 2 subsidiary departments (power plant and maintenance

32) Historically this training system for technology transfer was invented by Japanese. Transferred technology and skills were handed over from one skilled person to another unskilled person.
Yokosuka Navy Shipyard (1915) "History of Yokosuka Navy Shipyard" (in Japanese) p. 7

33) Interview with Mr. Shia Chun Kit, engineer of Malayawata Steel (1985. 11. Malaysia)

shop).

Basic policy for technology transfer to Malayawata was to perform the localization as soon as possible. For the smooth fade-out after technology transfer, there were many local limitations to be examined carefully. There were initial problems with breakdowns of machine and apparatus, subsidiary parts, Japanese engineer's instruction problems, local employee's ability, and morale. The management structure had to be redesigned to keep up with the progress of technology transfer. (Fig. 14)

At the start of the operation, the organization [Superintendent — Assistant Superintendent — 3 shift engineer] was staffed by only Japanese engineers. Japanese technicians were staffed to Assistant engineers under the instructions of 3 shift engineers. Malaysian T. A. trained in Japan were staffed to the post of T. A. as a leader of a work group. They played a key role when Japanese staff left. Japanese assistant engineers could not simply maintain the role of adviser. They had to step into the work operation itself because unskilled Malaysian T. A. could not perform their tasks independently. They had to overcome the uncertainty of initial breakdown of machines and help Malaysian engineers, T. A. and workers attain a level of proficiency.

They tried to solve the confrontational problems regarding the division of work among line and staff, technological specialty and relationship between guide and trainee. The management system of the plant was organized using the same principle as the Japanese steel mill before the introduction of the " Japanese Foreman System " (*Sagyocho Seido*) with rigid division of work by line and staff in 1960's. The shift engineers were staffed to the post of " line " by the old workshop management system (*Kumicho Seido*) with unclear division of work between " line " and " staff ". They were delegated comprehensive power to supervise the operation and at the same time to research and develop (R & D) the production process.[34)]

In the first stage of technology transfer, the plan aimed to develop Malaysian T. A. to the same level as a Japanese skilled worker (*Gocho*). After that, the Malaysian T. A. was expected to master shop management skills.

Malaysian engineers trained in Japan were also expected to obtain the same level as a traditional Japanese engineer (*Kantoku Gijutsuin*). They had to learn and master the operation technology of each plant and simultaneously to master the management skill of plant organization through OJT as quickly as possible. After 6 months of adjusting to the skill's development of local employees, skilled T. A. trained in Japan were transferred to the post of Senior T. A.. They start-

34) Yoneyama Kikuji (1978) " Technological Innovation and Workshop Management " (in Japanese) p. 213-218 Bokutakusha

Fig. 14 Technology Transfer and Management Structure of Malayawata Steel

(1) Administrative Division

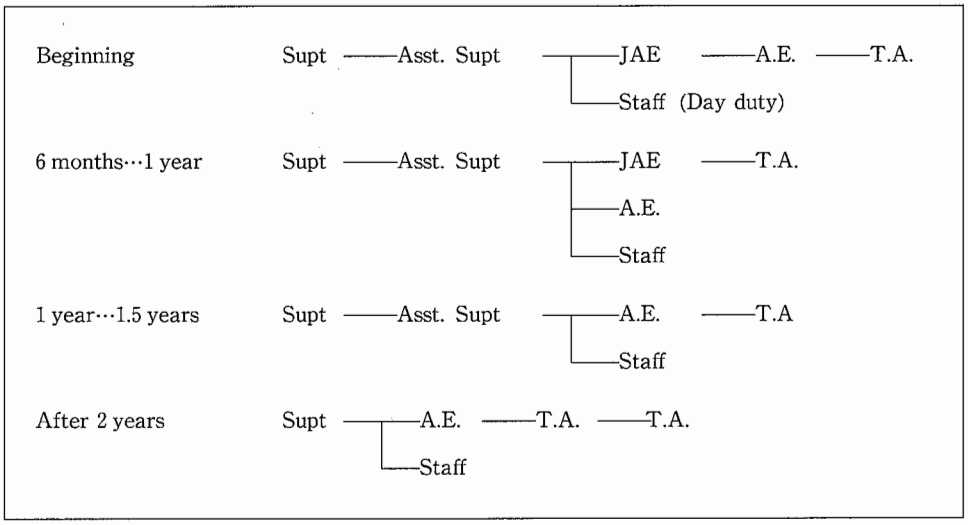

(2) Production Division

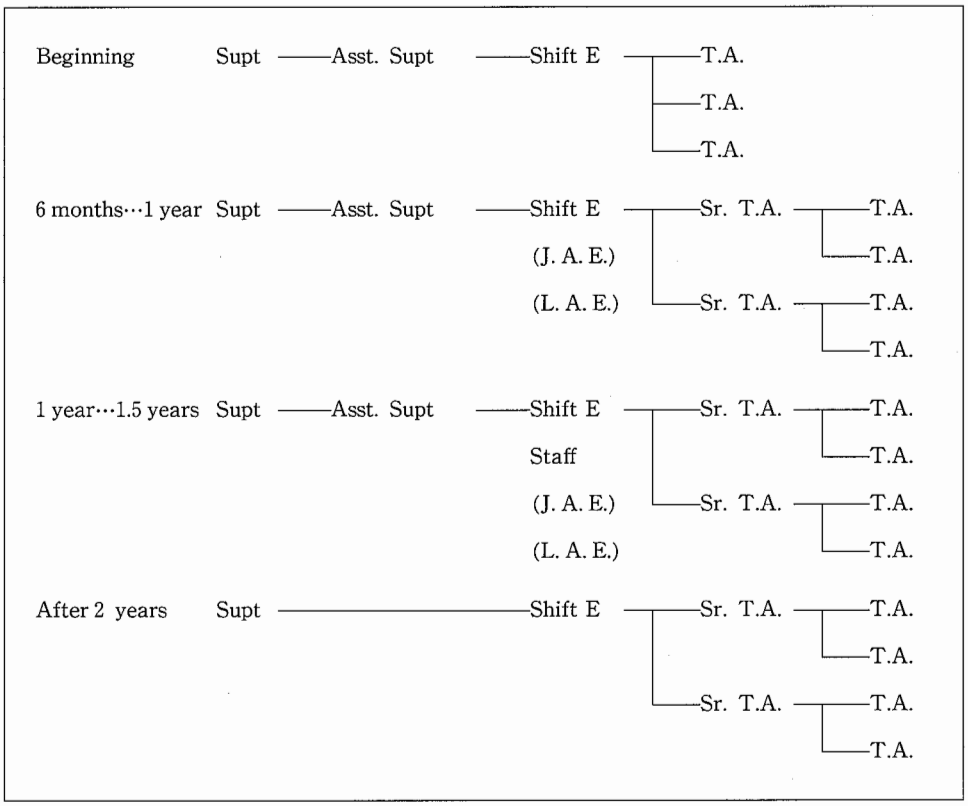

(Note) Supt=Superintendent, Asst. Supt=Assistant Superintendent, J.A.E.=Japanese Assistant Engineer, A.E.=Assistant Engineer, T.A.=Technical Assistant, L.A.E.=Local Assistant Engineer, Shift E=Shift Engineer, T.A.'=Skilled Technical Assistant, Sr. T.A.=Senior Technical Assistant

ed to provide guidance for locally employed T. A.. Step by step, the posts occupied by Japanese engineers and T. A. were transferred to Malaysian engineers and T. A..

After 2 years, when Japanese T.A. left Malayawata, the post of Super Intendent was abolished. In the administrative division, Malaysian Assistant engineers were directly managed by Japanese Superintendents. On the other hand, in the production division, after 2 years, all Japanese engineers and T. A. had left. The production process was operated by only Malaysian engineers and T. A..

Japanese engineers and T. A. had to master the operation of the Malayawata plant to achieve the full capacity of all machines and apparatus. And they provided technological guidance for Malaysian engineers, T. A. and workers. There was no performance or production guarantee in the technological cooperation agreement between Yawata Iron and Steel and Malayawata Steel. Yawata felt a moral responsibility for the smooth start-up of a joint venture company. Therefore Yawata adopted a " Turn Key " system. Yawata designed the plant, supplied the plant, exported materials, constructed and made test runs. Japanese staff were eager to carry out the technology transfer and to achieve the full capacity of the plant. As a result, their eagerness put into effect the performance and production guarantee.

8. Conclusion

The Malayawata Steel project aimed to establish the iron and steel industry in Malaysia by the development and transfer of appropriate key technology. This project had a structure and process shown in Fig. 15.

Prof. Torii Yasuhiko analyzed the Malayawata Steel project using an Input/Output methodology.[35] This research obtained the following conclusions. Malayawata Steel is a small scale integrated steel mill with a modern technological system. The unique adoption of charcoal refining technology for the blast furnace has had a large direct and indirect induced effect on employment.

Malayawata Steel employed 1238 persons and its subsidiary company Malayawata Charcoal Co,. employed 672 persons in 1971. In total 1900 persons were employed in the production process. Moreover this project created job opportunities for about 5200 persons (1900 persons at Malayawata Steel +3300 persons at Malayawata Charcoal). Associate Professor Chee Pen Lim and Lecturer Lee Poh Ping, University of Malaya evaluated the Malayawata project as follows:

1. The foundation of Malayawata played a decisive role in the industrial development in Malaysia. An important key industry was founded by this project.

35) Torii Yasuhiko (1978) " Economic Effect Analysis of an Integrated Steel Mill in a developing country " (in Japanese) Kokusaikyoryoku Suisinkyoukai

Fig. 15 Overseas Technological Cooperation to Malaysia

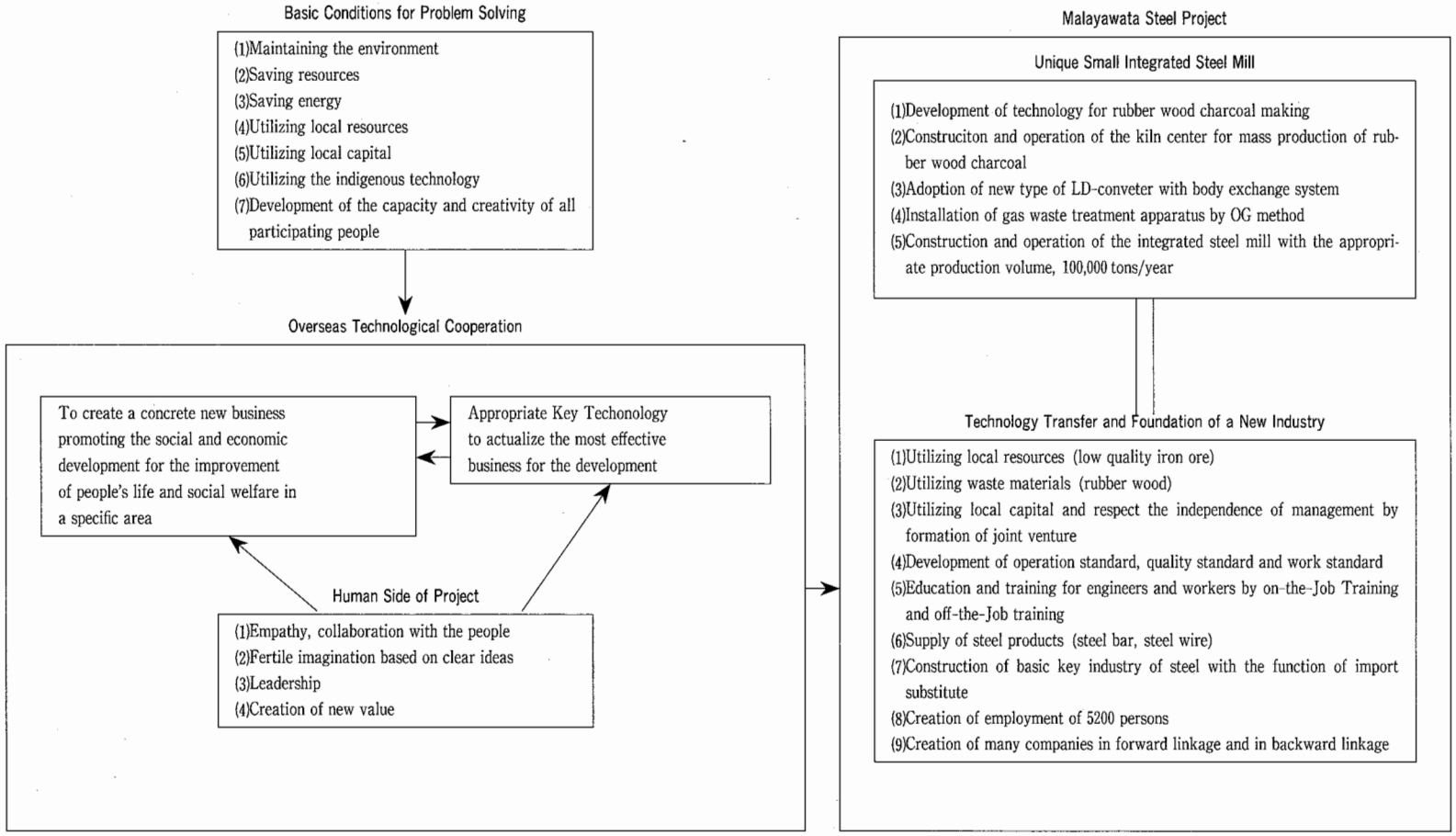

2. Malayawata makes use of domestic raw materials to the maximum level. It creates the practical economic effects of job opportunity by mining of iron ore and limestone and charcoal making by wasted rubber wood for several thousands of people in the local area.
3. Malayawata brought about the direct employment of 2000 persons and indirect employment of 8000 persons for Malaysia in 1978.
4. Transfer of capital and technology occurred in only 11 years. It is especially important that the Japanese modified the technology suitable for the low demand of Malaysia,. and adopted a technology to maximize the use of domestic resources. This was realized without sacrifice of profitability and the latest development of steel technology. The main reason for Malayawata's managerial success was the basic plan. Malayawata Steel is one of the most technologically modern steel works in the world. Furthermore, IFC (International Financial Corporation) commented on this project in its annual report of 1968. It highly evaluated the transfer of appropriate key technology, and the rubber wood charcoal blast furnace system.[36)]

Professor Dr. Mohammed Ariff, University of Malaya commented that Malayawata could not develop surplus engineers and skilled workers for another new steel mill.[37)]

But based on the author's original survey at Prai in 1985, it became clear that Malayawata's engineers and skilled workers did not want to move to another newly constructed steel mill on the east coast. The new steel mill could not offer them better work conditions and life.[38)] Therefore the new steel mill could not aquire the necessary eligible workforce.

In the first stage, the appropriate key technology for the small integrated steel mill was transferred from Japan to Malayawata Steel and Malayawata Charcoal. In the second stage, the charcoal making technology was transferred from Malayawata Charcoal to local Malaysian companies. In the third stage in 1969, a company from Thailand asked Malayawata Charcoal for the transfer of charcoal making technology.

At this request, Malaysian engineers provided technological guidance to Thai engineers. From 1971, a Thai company started to export rubber wood charcoal

36) International Financial Corporation "Annual Report" 1968.
"The IFC assisted project uses charcoal made of over-aged trees from Malaysian's rubber plantations as a principal raw material.

37) Mohammed Ariff (1984) "The Technology Transfer in the Iron and Steel Industry of Malaysia" p. 76 in Unku Aziz et al Ed. "Technology, Culture and Development" Institute of Advanced studies (Malaysia, Kuala Lumpur)

38) Interview with Personnel manager of Malayawata, Mr. Nicholas Choo (1985. 11, Prai. Malaysia) Work conditions and life means (1)uniqueness of the area (2)climate (3)living standards (4)good educational opportunity for children (5)top management and engineers's attitude to the work. They took up posts leaving their families behind in Kuala Lumpur.

to Malayawata. This new business created many job opportunities in Thailand, contributed to activate the local economy and to improve the trade imbalance between Thai and Malaysia.[39]

From 1984, there was no regular Japanese staff at Malayawata. The production was carried out smoothly by the Malaysian staff. (Fig. 16) Japanese remained only as part-time members of the board of directors. Thus Malayawata had succeeded in the establishment of a basic key industry in Malaysia. And it has played a historical role as a technical training center for vocational training center in Malaysia.[40]

Today, Malayawata has a new role as a R & D center for technology transfer and metallurgy networked with Universities, foreign companies and institutes around the world.[41]

As to the Malaysialization of the capital, Pernas Engineering Sdn. Bhd. (Malaysia) has 46.1% of stock and Nippon Steel and 3 other companies (Japan) have only 24.3% of stock in 1985.[42] Pernas has 30.0% and Nippon Steel and 3 other companies have 11.4% in 1994. Malayawata sales totalled 374,000 MT of rolled products and made a profit of M$ 86.9 million.[43] Malayawata steel has become an entirely Malaysian company.

This was accomplished through the friendship.[44] From the viewpoint of engineering, it was due to the R & D of appropriate key technology and the effective transfer by standard textbooks, numerous standards of technology, operation, quality, cost and work and education and training through on-the-job training and off-the-job training. The first blast furnace in a South East Asian country is the symbol of the harmony of different ethnic groups and the social melting pot of traditional culture and industrial civilization.

Professor of Industrial Management, Hokkaido University

39) Interview with Mr. Lim Seng Chai, Superintendent of Malayawata Charcoal (1985. 11. Prai)
Interview with Mr. Amphol Eiwwongcharoen, Director of Pasana Co,. Ltd. Thailand (1985. 11. Prai, Malaysia)

40) 8 engineers and 16 T. A. trained in Japan moved from Malayawata from 1967 to 1984. In the early days, Malayawata was given the nickname of " Malayawata Training Center ".

41) Malaysia has a world-wide research institute, Rubber Research Institute of Malaysia (RRIM).

42) Malayawata Steel "Annual Report " 1985.

43) Malayawata Steel "Annual Report " 1994

44) Message from the Minister of Commerce & Industry, Dr. Lim Swee Aun at the official opening September 9, 1967. " The establishment of an integrated iron and steel industry by Malayawata Steel Ltd. represents the greatest industrial achievement of the country since the pioneer industries program was launched ten years ago."
Message from Inayama, Chairman of Yawata Iron & Steel " This significant achievement is undoubtedly the result of warm understanding and support of all those concerned, especially the Government of Malaysia. The spirit of friendship shown throughout this venture exemplifies. I believe the new era of free cooperation among national neighbors to achieve a common economic goal and the success attendant upon such international co-operative efforts." *The Straits Times*. September 9, 1967.

Fig. 16 Production Volume and Dispatched Japanese Engineers

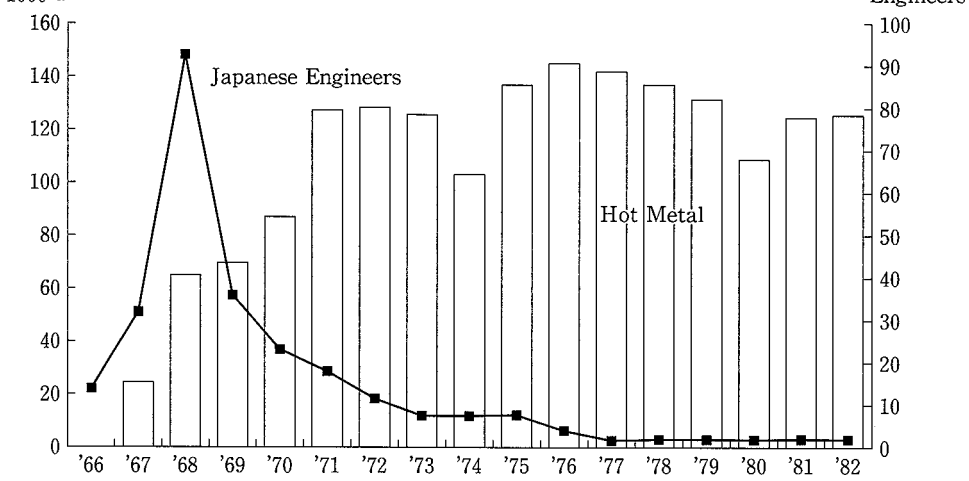

Acknowledgement

The author is particularly thankful to Mr. Nakagawa Hajime, former Vice-President of Nippon Steel, Mr. Sakai Shigeo, former Vice-President of Malayawata Steel, Mr. Oiwa Yasushi, Mr. Tanaka Jun, Mr. Ogawa Yoshiya, Mr. Tanaka Kastsuyoshi, Mr. Oiwa Yasushi, Administrative Division Staff, engineers and foremen at Yawata Works and headquarters of Nippon Steel. The author is thankful to Mr. Choo Kean Hin, General Manager, Mr. Nickolas Choo, Manager of Personnel Division, Mr. Shia Chun Kit, Mr. Lim Seng Chai, Administrative Staff, engineers and foremen of Malayawata Steel for the original data, interviews and their valuable comments which contributed to this research project.

The author is also thankful to Dr. Gregory Thong, former Professor University of Malaya, for valuable discussions and comments during his stint as Visiting Professor at Hokkaido University in 1984. The author is also thankful to Professor Koji Taira, University of Illinois, Fulbright Visiting Professor at Hokkaido University in 1981. Finally, the author is thankful to Mr. Peter Firkola, Researcher at Hokkaido University for his stimulative discussions.