NOx reduction and NO_2 emission characteristics in rich-lean combustion of hydrogen

Toshio Shudo
Applied Energy System Group, Division of Energy and Environmental Systems, Hokkaido University
N13 W8, Kita-Ward, Sapporo, Hokkaido, 060-8628, JAPAN
Email: shudo@eng.hokudai.ac.jp
Tel/Fax: +81-11-706-6402

Kento Omori
Tatsuno Mechatoronics Co.

Osamu Hiyama
Yazaki Co.

ABSTRACT

Hydrogen is a clean alternative to conventional hydrocarbon fuels, but it is very important to reduce the nitrogen oxides (NOx) emissions generated by hydrogen combustion. The rich-lean combustion or staged combustion is known to reduce NOx emissions from continuous combustion burners such as gas turbines and boilers, and NOx reduction effects have been demonstrated for hydrocarbon fuels. The authors applied rich-lean combustion to a hydrogen gas turbine and showed its NOx reduction effect in previous research. The present study focused on experimental measurements of NO and NO_2 emissions from a co-axial rich-lean burner fueled with hydrogen. The results were compared with diffusion combustion and methane rich-lean combustion. Significant reductions in NO and NO_2 were achieved with rich-lean combustion. The NO and NO_2 reduction effects by rich-lean combustion relative to conventional diffusion combustion were higher with hydrogen than with methane.

Keywords: Hydrogen, Rich-Lean Combustion, Staged Combustion, Nitrogen Oxides, Zel'dovich NO, Fenimore NO, prompt NO, NO_2

1. INTRODUCTION

Hydrogen is considered an ideal alternative to conventional hydrocarbon fuels, because hydrogen can be produced from any kind of energy source and as it burns without emitting soot or carbon dioxide. Nitrogen oxides (NOx) are the only potential pollutants from hydrogen combustion, and it is crucial to reduce NOx emissions from hydrogen combustion.

Rich-lean combustion or staged combustion is known as a technique to reduce NOx formation in continuous combustion burners such as gas turbines and boilers. The effect has been demonstrated with conventional hydrocarbon fuels by many researchers [1-2]. The authors have applied rich-lean combustion to a hydrogen gas turbine and shown its effect of NOx reduction in previous research [3-4]. The rich-lean combustion reduces the thermal NO, the Zel'dovich NO [5-6], which is the main part of combustion-generated NOx. At the same time, the prompt NO, Fenimore NO [7], is formed in hydrocarbon combustion especially under fuel-rich conditions. Though the amount of prompt NO is quite small for conventional premixed or diffusion combustion, it could become a significant portion of the total NO emissions from rich-lean combustion due to the largely decreased thermal NO and the existence of fuel-rich mixture. Also, the NOx emissions from combustion include NO_2 which is more harmful to human health than NO and also has a strong green house effect. The current paper analyzes the emission characteristics of NO and NO_2 from a coaxial rich-lean burner fueled with hydrogen. The results are compared with rich-lean combustion with methane.

2. EXPERIMENTS

Figure 1 shows the coaxial rich-lean burner used in this research. The burner supplies the richer mixture from the inner nozzle and the leaner mixture from the outer nozzle. As shown in Figure 2, air for the leaner mixture was supplied by a blower and measured with an orifice. Air for the richer mixture was supplied from a high-pressure gas cylinder and measured with a mass flow meter. Hydrogen or methane was supplied from high-pressure cylinders and measured with mass flow meters for the rich and lean mixtures respectively. The concentrations of NO_x and NO in the exhaust gas were measured with a Chemiluminescence detector (CLD) type exhaust gas analyzer. Because the CLD analyzer measures NO only, NO_2 in sample gas was converted to NO with a catalyst before measuring NOx (NO + NO_2). This study derived NO_2 concentration from differences between NO and NOx concentrations measured with the analyzer.

International Association for Hydrogen Energy. Published by Elsevier Ltd.
doi:10.1016/j.ijhydene.2008.05.034

The experiments were made with varying equivalence ratios of the richer, leaner, and an overall mixture, denoted as ϕ_{rich}, ϕ_{lean}, and $\phi_{overall}$ respectively in this paper. The flow rate of the total supply of fuel was controlled to input constant lower heating value of 1160kJ/min for all the experimental conditions. In some cases, the rich-lean combustion was compared with diffusion combustion that was achieved by supplying fuel from the inner nozzle and air from the outer nozzle as shown in Figure 1.

3. RESULTS AND DISCUSSIONS

3.1 NOx reduction by hydrogen rich-lean combustion

Figure 3 shows NOx emissions from hydrogen rich-lean combustion versus the richer-mixture equivalence ratio ϕ_{rich}. The right axis shows the NOx concentration in ppm for results with the overall equivalence ratio $\phi_{overall}$ of 1.0, while the left axis shows the emission in mg/mol_{fuel} for overall equivalence ratios of 0.8, 1.0, 1.2, and 1.4. The experiments varied the overall equivalence ratio $\phi_{overall}$ under the constant leaner-mixture equivalence ratio ϕ_{lean} of 0.4. The value of leaner-mixture equivalence ratio was chosen because it was the best for reducing NOx by rich-lean combustion at soichiometric overall equivalence ratio. Figure 4 shows flow rates of the richer and leaner mixtures as functions of the richer mixture equivalence ratio ϕ_{rich}. A higher overall equivalence ratio than the stoichiometric value results in lower NO_x emissions. For all the overall equivalence ratios tested here, the NO_x emissions tend to decrease around the richer-mixture equivalence ratio ϕ_{rich} of 2.0. It is clear that, with appropriate mixture conditions, the NO_x emission from hydrogen can be reduced by the rich-lean combustion.

Figure 5 shows the NO_x reduction effect by the rich-lean combustion with hydrogen or methane at constant equivalence ratios of the overall and the leaner mixtures of 1.0 and 0.4 respectively. The NO_x reduction effect is shown in a normalized expression that is divided by the NO_x emissions from diffusion combustion. The diffusion combustion of hydrogen or methane was achieved in the same coaxial burner with fuel supply from the inner nozzle and air supply from the outer nozzle. The supplies of fuel and air were stoichiometric. The NOx emission from the hydrogen diffusion combustion was 143ppm. With either hydrogen or methane, the NO_x emission is greatly reduced by the rich-lean combustion around the richer-mixture equivalence ratio ϕ_{rich} of 2.0. The hydrogen rich-lean combustion maintains the NO_x reduction effect even with larger richer-mixture equivalence ratios, while the effect disappears with methane at richer-mixture equivalence ratios ϕ_{rich} larger than 3.0.

Figure 6 shows the NOx reduction effects by hydrogen and methane rich-lean combustion for different richer-mixture equivalence ratios at the constant leaner-mixture equivalence ratio ϕ_{lean} of 0.4. The figure shows the NO_x reduction effect in the normalized expression $NOx_{r\text{-}l}/NOx_{diff}$ like in the previous figure, against the overall equivalence ratio. The NO_x reduction effect is larger for hydrogen than for methane. The two fuels also show different changes in NOx reduction against the overall equivalence ratio. Regardless of the value of the richer-mixture equivalence ratio, the overall equivalence ratios with the lowest NO_x reduction effect is slightly less than 1.0 in the hydrogen rich-lean combustion. Different from this, the overall equivalence ratio with the lowest NO_x reduction effect is larger than 1.0 in the methane rich-lean combustion.

Formation of thermal NO, which is the main part of NO_x, is expressed with the extended Zel'dovich NO reactions mechanism [4-5] as follows:

$$N_2 + O \rightarrow NO + N \quad (1)$$

$$N + O_2 \rightarrow NO + O \quad (2)$$

$$N + OH \rightarrow NO + H \quad (3)$$

Because this process needs high temperatures and sufficient oxygen, the thermal NO formation has a peak with a slightly leaner mixture than stoichiometric. At the same time, there is a further NO formation process. In this process NO is rapidly generated, compared to the thermal NO, and the NO is called the prompt NO or the Fenimore NO [6]. Though the amount of the prompt NO is usually very small for conventional premixed or diffusion combustion, it could form a significant part of the total NO emission from the rich-lean combustion due to the very decreased thermal NO. Figure 7 shows the path of the generation of prompt NO from HCN [8]. In the combustion process, HCN is produced by the following reactions of nitrogen from the air and fuel-decomposed CH or CH_2.

$$CH + N_2 \rightarrow HCN + N \quad (4)$$

$$CH_2 + N_2 \rightarrow HCN + NH \quad (5)$$

Fuel-rich conditions, which can supply enough CH and CH_2 to produce HCN, lead to higher amounts of prompt NO emissions.

The differences in the NOx emissions shown in Figure 6 can be explained by the characteristics of the thermal NO and the prompt NO. With methane, the prompt NO from the richer mixture reduces the effect of the thermal NO reduction by the rich-lean combustion which gives rise to fuel rich conditions. The $NOx_{r\text{-}l}/NOx_{diff}$ becomes the maximum with a richer overall equivalence ratio condition. On the other hand, hydrogen, which contains no carbon, does not produce the CH or CH_2 necessary for HCN production. So the hydrogen rich-lean combustion does not emit prompt NO, and the emission changes are influenced by only the thermal NO. The emission of prompt NO could be a reason for the difference.

International Association for Hydrogen Energy. Published by Elsevier Ltd.
doi:10.1016/j.ijhydene.2008.05.034

In conclusion, hydrogen is more suitable for the rich-lean combustion than hydrocarbons, because hydrogen does not result in prompt NO even under the fuel-rich conditions which will occur in the rich-lean combustion.

3.2 NO_2 emission in the hydrogen rich-lean combustion

Figure 8 shows NO_2 emission from the hydrogen rich-lean combustion against the richer-mixture equivalence ratio ϕ_{rich}. The experiments were made in the same manner as in Figure 3 varying the overall equivalence ratio $\phi_{overall}$ under a constant leaner-mixture equivalence ratio ϕ_{lean} of 0.4. The NO_2 emissions from hydrogen rich-lean combustion decreases when the richer mixture equivalence ratio is around 2. Higher overall equivalence ratios tend to result in less NO_2, maybe because of lower concentrations of O_2 for oxidizing NO to NO_2. Figure 9 shows the NO_2 reduction effect by the rich-lean combustion for hydrogen or methane at constant equivalence ratios of the overall and the leaner mixtures of 1.0 and 0.4 respectively. The NO_2 reduction effect is shown in a normalized expression that is divided by the NO_2 emission from the diffusion combustion in the figure. The NO_2 concentration was estimated from the difference between NO and NOx, both measured by the CLD detector. For both hydrogen and methane, the trends in NO_2 emissions in the rich-lean combustion are quite similar to those of NO_x shown in Figure 5. Compared to the methane rich-lean combustion, the hydrogen rich-lean combustion has a stronger NO_2 reduction effect. Figure 10 shows the fraction of NO_2 in NOx with the rich-lean combustion against the overall equivalence ratio. The data points in the figure are averaged values for the richer-mixture equivalence ratios of 1.5, 2.0, 2.5, 3.0, and 5.0. The vertical bars indicate the range of the data for each overall equivalence ratio. For both hydrogen and methane, the NO_2/NO_x ratio decreases with the increase in the overall equivalence ratio. This can be attributed to the lowered concentration of oxygen that oxidizes NO to NO_2. For each overall equivalence ratio, the values of NO_2/NO_x are lower in the rich-lean combustion of hydrogen than that with methane.

A part of the NO formed by the extended Zel'dovich NO mechanism or by the prompt NO mechanism is oxidized to NO_2. The NO oxidation is expressed with the following reactions [9].

$$NO + O_2 \rightarrow NO_2 + O \quad (6)$$

$$NO + OH \rightarrow NO_2 + H \quad (7)$$

$$NO + HO_2 \rightarrow NO_2 + OH \quad (8)$$

$$NO + O + M \rightarrow NO_2 + M \quad (9)$$

The oxidation of NO by HO_2 shown in Reaction (8) is the dominant among the reactions to produce NO_2 from NO. HO_2 may play an important role in the lower NO_2 emissions from the hydrogen rich-lean combustion. Further mechanisms in the difference in NO2 will be investigated in the future study by the authors.

Hydrogen has the advantage to reduce NO and NO_2 emissions by the rich-lean combustion, because of the zero emissions of prompt NO and the lower emission of NO_2.

4. CONCLUSIONS

The results derived from this research may be summarized as follows:

1. The NO_x emissions from hydrogen combustion can be reduced by the rich-lean combustion in a coaxial burner as compared with diffusion combustion.
2. The NO_x reduction effect is larger in the rich-lean combustion of hydrogen than that of methane. This may be attributed to the zero emissions of prompt NO from hydrogen flames, while the fraction of prompt NO to total NO can be increased in the rich-lean combustion of hydrocarbons due to the reduced thermal NO and to the existence of fuel-rich conditions.
3. The NO_2/NOx emission fractions are lower in the rich-lean combustion of hydrogen than in that of methane. HO_2, the main oxidizer for NO, may play an important role in the lower NO_2 emissions from the hydrogen rich-lean combustion.
4. Hydrogen is a suitable fuel to reduce both NO and NO_2 by rich-lean combustion, because of the zero emission of the prompt NO and the lower NO_2 emission.

ACKNOWLEDGMENTS

The authors express their gratitude to Mr. T. Mizuide and Mr. H. Kawaguchi, former students of Musashi Institute of Technology, for their help in the research. The research was supported by a Grant-in-Aid for Scientific Research (No.13750179) from the Ministry of Education, Sports, Science and Technology of Japan.

REFERENCES

[1] Meisl J., Koch R., Kneer R., Wittig S. Study of NO_x emission characteristics in pressurized staged combustor concepts, International Symposium on Combustion 1994;25(1):1043-1049.

[2] Shudo T., Ogawa H., Miyamoto N. The influence of fuel properties on combustion and emissions in a DI stratified charge engine, JSAE Review 1995;16(1):27-33.

[3] Shudo T., Mizuide T., Omori K. NOx Reduction by rich-lean combustion in a hydrogen-fuelled gas turbine, 29th International Symposium on Combustion WIP Abstracts 2002:19.

[4] Shudo T., Mizuide T. NOx emission characteristics in rich-lean combustion of hydrogen, JSAE Review 2002;23(1):9-14.

[5] Zel'dovich Ya.B., Sadovnikov P.Ya., Frank-Kamenetskii D.A. Oxidation of nitrogen in combustion, Science Academy of USSR 1947.

[6] Shahed S.M., Newhall H.K. Kinetics of nitric oxide formation in propane-air and hydrogen-air-diluent flames, Combustion and Flame 1971;17(2):131-137.

[7] Fenimore C.P. Formation of nitric oxide in premixed hydrocarbon flames, International Symposium on Combustion 1971:373.

[8] Miller J.A., BowmanT.C., Mechanism and modeling of nitrogen chemistry in combustion, Progress in Energy Combustion Science 1989;15:287-338.

[9] Hori M. Research of NO-NO_2 conversion by probe model calculation, Journal of Gas Turbine Society Japan 1981;9(35):44.

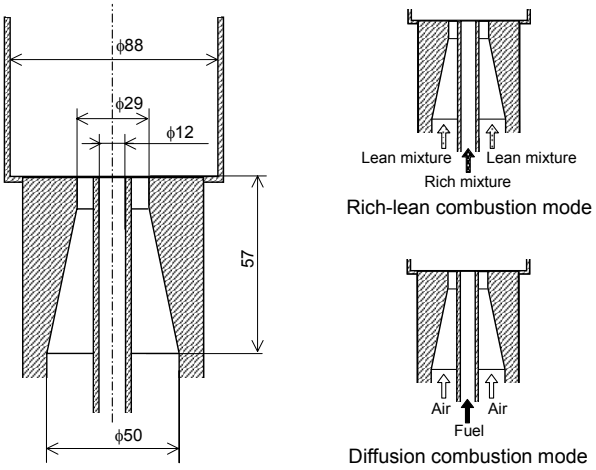

Fig.1 Coaxial rich-lean burner used in the experiments

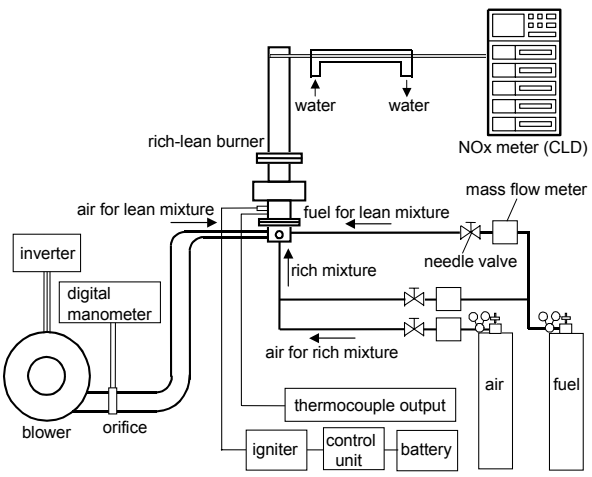

Fig.2 Experimental system in this research

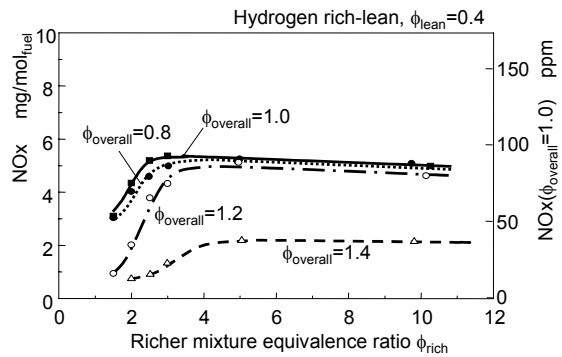

Fig.3 NOx emissions in rich-lean hydrogen combustion for different overall equivalence ratios [2]

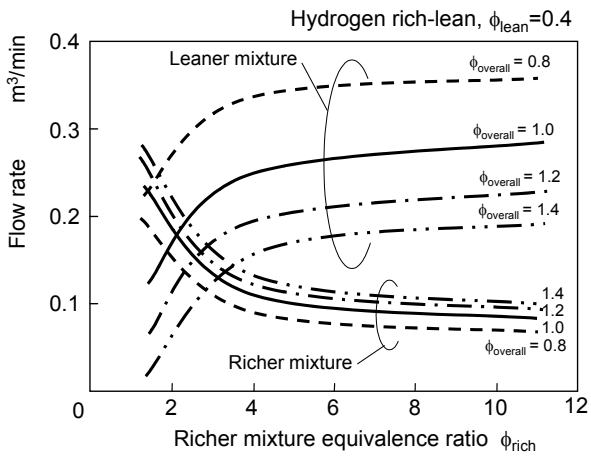

Fig.4 Flow rates of richer and leaner mixtures

International Association for Hydrogen Energy. Published by Elsevier Ltd.
doi:10.1016/j.ijhydene.2008.05.034

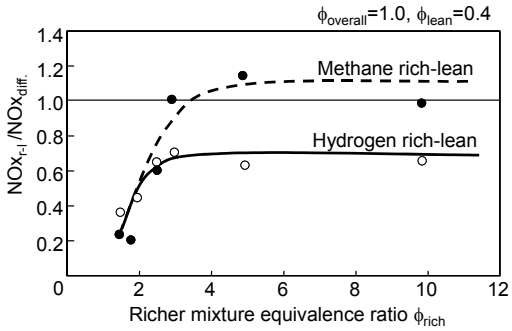

Fig.5 NOx reduction by rich-lean combustion relative to diffusion combustion

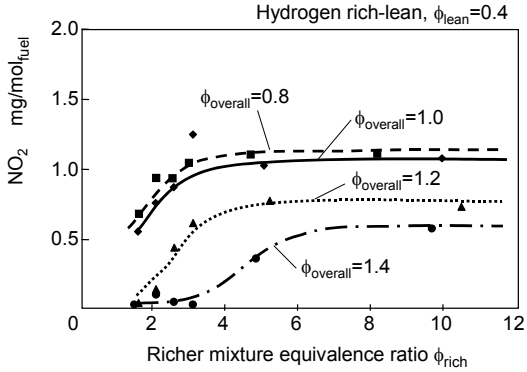

Fig.8 NO_2 emission in hydrogen rich-lean combustion

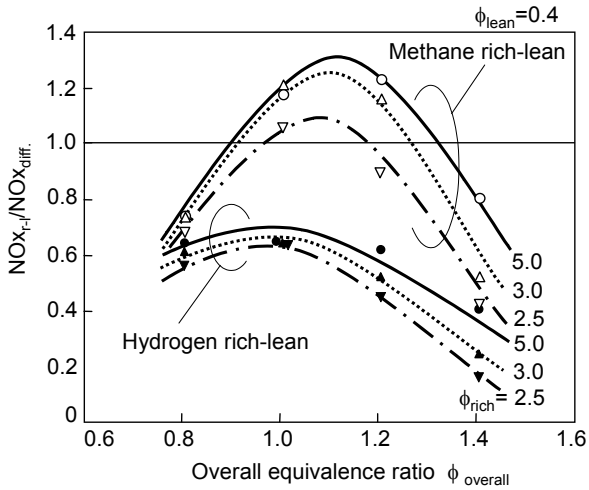

Fig.6 NOx reduction by rich-lean combustion relative to diffusion combustion

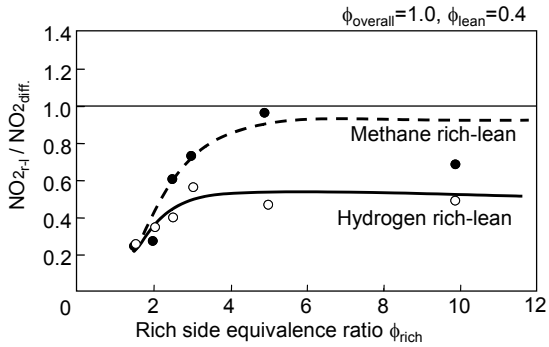

Fig.9 NO_2 reduction by rich-lean combustion

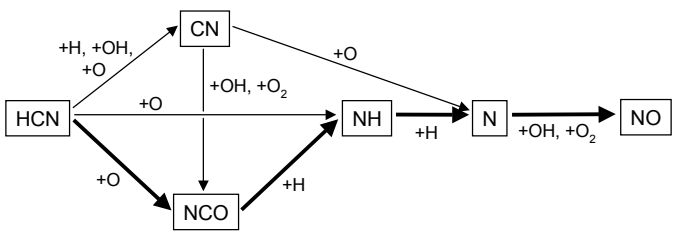

Fig.7 Prompt NO generation via HCN [6]

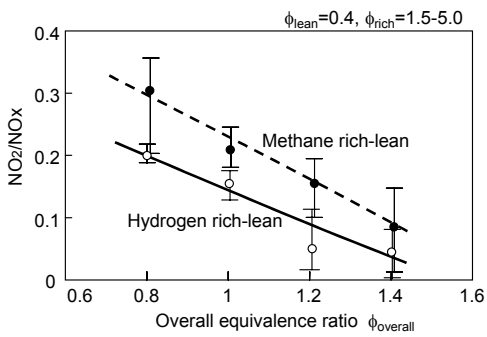

Fig.10 Fraction of NO_2 in NOx emission from rich-lean combustion

International Association for Hydrogen Energy. Published by Elsevier Ltd.
doi:10.1016/j.ijhydene.2008.05.034