Environ. Sci., Hokkaido	7 (2)	195~210	Dec. 1984

An Observation of a Socioeconomic System from the Viewpoint of Living Standard

Hideaki Abe
Department of Agricultural Policy, Division of Social Environment,
Graduate School of Environmental Science,
Hokkaido University, Sapporo, 060, Japan

Akio Itoh
Department of Research & Development,
Hokkaido Engineering Consultants Co., Ltd.
Sapporo, 060, Japan

Abstract

This study tries to analyze and assess the living standard (the degree of satisfaction) including subjective and psychological aspects from a socioeconomic viewpoint integrating the conventional monetary economic approach and non-monetary social approach.

Although the living standard (the degree of satisfaction) as a comprehensive welfare criterion is analyzed and assessed with taking into consideration the development and genealogy of social indicators through integration of society and economy to provide the framework of a socioeconomic system necessary for deploying comprehensive welfare policies in the future.

For elucidating the interrelated structure of a society and economy a systematic analysis including the examination of subjective data such as the 'Quality of Life' will be of importance in the future, in addition to the analysis mainly based on objective data as in this study. Moreover the analysis of dynamic changes in economic phenomena will also become necessary.

As discussed above, there are many difficulties in the systematization of socioeconomic phenomena. It can be said, however, that the analysis based on a systematic viewpoint will have an important meaning further for the development of comprehensive welfare policies in the future.

Key Words: Socioeconomic Model, Socioeconomic System, Living-Standard.

1. Introduction

Present society and economy have become diversified and pluralistic one due to the changes of conditions such as the increase of aged population and variety of values, etc. as well as the restriction of resources and environment and stabilization of economy.

Under these circumstances the manifestation of such anti-welfare factors as pollution and traffic accidents as well as the change in senses of life have made it urgent to establish more comprehensive assessment criteria of welfare standard including economic indicators referrenced by GNP.

In this study the living standard (the degree of statisfaction) as a comprehensive

welfare criterion is analyzed and assessed with taking into consideration the development and genealogy of social indicators through integration of society and economy to provide the framework of a socioeconomic system necessary for deploying comprehensive welfare policies in the future.

2. Development and genealogy of social indicators and socioeconomic models

2-1. Development and genealogy of social indicators

i) Indicators with a monetary and economic approach

This is the approach which is based on gross production or net production and in which even negative economic factors are converted into monetary amounts and assessed. Typically, the following indicators represent this approach : Welfare GNP by A. W. Sametz in Russell Sage Foundation ; MEW (Measures of Economic Wekfare) developed by W. Nordhaus and J. Tobin in NBER (National Bereau of Economic Research) ; and Japan's NNW (Net National Welfare) developed by the Committee for NNW Development in the Economic Council.[1]

In MEW, based on traditional NNP (Net National Products), both the positive items such as the increase of leisure times and the negative items including envirnmental deterioration and the increase of discomfort are enverted into monetary amounts to modify NNP into a welfare index.

ii) Indicators with a non-monetary and social approach

This approach is to provide non-monetary, physical indications for various fields of social life. Typically, the indicators by UNRISD (United Nations Research Institute for Social Development)[2] the social indicators by OECD (Organization for Economic Cooperation and Development)[3] and others are included to this approach.

The indicators of UNRISD made by Drewnowski *et al.* have the chracteristics to classify the needs in social life into the 3rd stages of fundamental needs, cultural needs and higher needs, obtain the indicators of each stages at 2nd standard points of welfare achieving point and welfare limiting point, and thus try to compare living standards of various countri'es in this way. In OECD, the work of developing social indicators has been progressed in 4rd phases, and the social goal and its concrete details were determined in 1973 as the first phase. In this approach, the social goal for fields of the social indicators was established at first, under the goal fundamental social concerns were determined, under which sub-concerns were further set up, and thus the details of national concerns were presented in a hierarchical stracture. After this, the development work of the indicators will be advanced as follows : in the second phase, the indicators showing the variation in social level will be set up for the fields determined in the first phase ; these indicators will be integrated into a comprehensive index for each of the fields in the third phase ; and in the final fourth phase, the relation between the social performances measured by the social indicators and the resources inputted will be made clear, and the work will presumably reach the stage of forecasting exceeding that of indication.

iii) Indicators with a subjective and psychological approach

Advancing further the stream of economic and social indicators, this approach is to understand welfare level including even such sociopsychological elements as the degree of contentment, satisfaction and the like. It is represented by the approach of Relevant Quality of Life Research Program by UNESCO and Research on National Preferences in Life by the Council on National Life in Japan.[4] In the program of Research on National Preferences in Life a preliminary survey and the first national survey were carried out in 1971 and 1972, respectively, and after that surveys have been conducted every 3 years. For each field of nation's life such as income and consumption of household, leisure activities, health care and so on, the survey analyzes scientifically people's needs, requests to government policies, feeling of happiness, the degree of satisfaction in life, awareness of life standards and attitude to values by using the analytical techniques of the factor analysis, quatification theory and the like. Survey after survey, new devices have been added.

2-2. Development and genealogy of socioeconomic models

In present society and economy it is expected to realize a comprehensive social policy including not only economic policies but also social policies and social plans. However, due to the difficulty in understanding the causal relation among social variables, imcompleteness of theoretical composition and delay in collection, preparation and systematization of basic data because of the existence of subjective indicators, systematic model-construction represented by econometric models are confronting difficulties.

Although the construction of social system models is yet in complete due to the reasons above mentioned, as efforts to combine understandable economic fundamentals and social indicators not including subjective elements there exist COSMO (Comprehensive System Model) by the Economic Planning Agency developed in 1973 as a part of the work of establishing the 'Fundamental Socioeconomic Plan' and a macro-model of social indicators developed by Mr. Kimio Uno[5] as typical examples.

The both models are different in their structure but have a common feature in trying to combine macro-model and the system of social indicators.

3. Socioeconomic system

This study tries to analyze and assess the living standard (satisfaction degree) including subjective and psychological aspects from a socioeconomic viewpoint integrating the conventional monetary economic approach and non-monetary social approach. In the conventional analyses of living standard, each of the indicators employed, whether they are subjective or objective is independent from each other, and the analyses tend to be deviated from socioeconomic mechanism having interrelationship. While this study analyzes the living standard (satisfaction degree) by using objective indicators in the framework integrating social and economic systems,

although it still leaves the necessity of further analyses on the problems of life structure which defines the 'QUALITY OF LIFE'.

The approach from this point of view enables the analysis of living standard in view of complex economic and life structures and provides useful suggestions to elucidate the intralife structure and the interrelated structure between life structure and economic structure in the future.

Fig. 1 shows the total composition of the model. Its details are as follows.

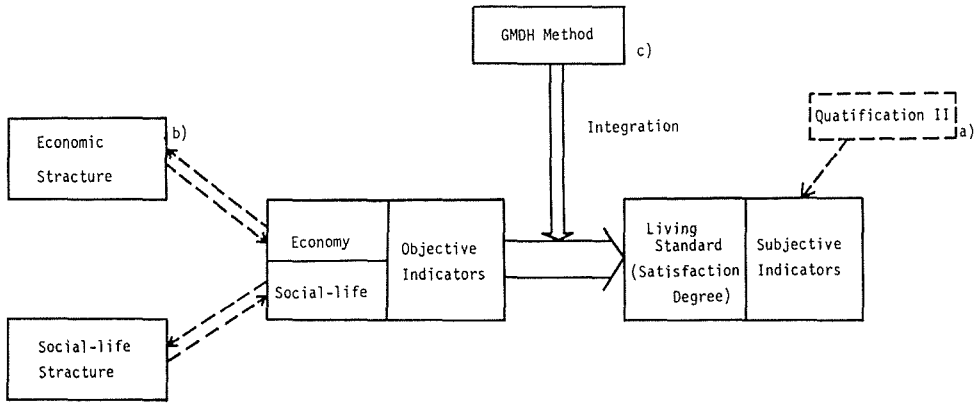

Fig. 1. Conceptional Flow.

a) The living standard (satisfaction degree) as a subjective index is estimated for each of the life fields, based on the results of the multivariate analysis using category classfication (quatification II class).[6]

b) Economic indicators as objective indicators are set up through the endogenous and exogenous variables in the macroeconometric model which defines the economic structure.

Here, the econometric model should be a growth model based on the Keynesian type demand model with taking into consideration the element of production capacity (supply capacity), and its model system is composed of 5 blocks of population, production, income, capital stock, investment and expenditure, as shown in Fig. 2.

c) The living standard (satisfaction degree) which is a subjective index is defined by using the economic indicators and social life indicators which are objective indicators. In doing so, an analysis is performed by using GMDH Method (Group Method of Data Handling)[7] for the purpose of grasping complex causal interrelations.

Hokkaido is selected as the object area of the analysis in this study.

1) Macro-econometric model

The estimation period of the structure equation is 16 years from 1963 to 1979, and the ordinary least squares method is employed as the estimation method.

The values within parentheses of the equation are t values of parameters, R^{**} is decision coefficient, D. W. is Durbin=Watson statistic and LOG is common logarithms.

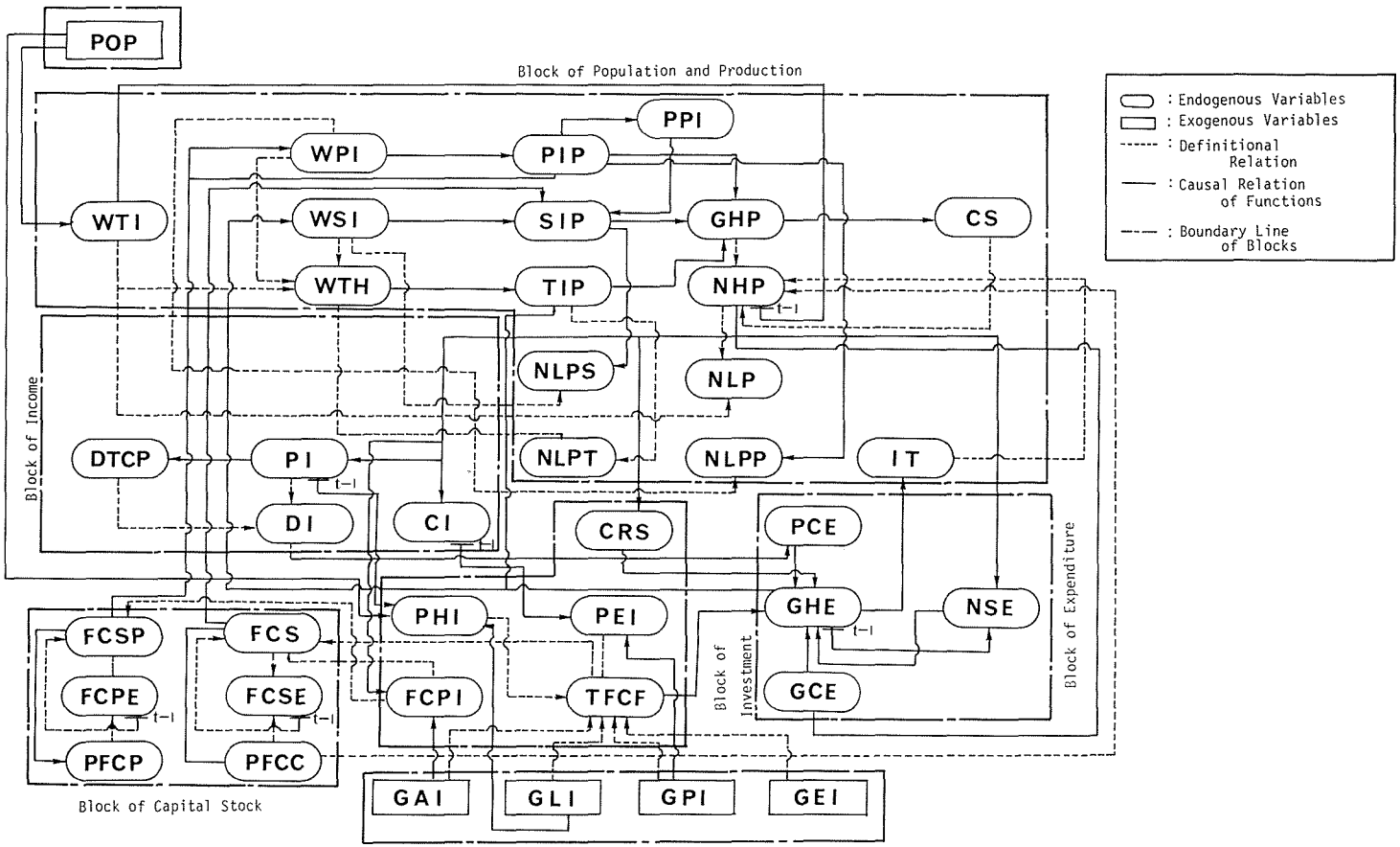

Fig. 2. Flowdiagram of the Macro Economic Model.

The results of measurements are shown materials 1.

2) Socioeconomic model

The satisfaction degree was estimated by using GMDH Method, adapting economic and social indicators as independent variables to each field of the living standard (satisfaction degree).

A polynomial type of

$$Z_i = a_0 + a_1 x_i + a_2 x_i^2 + \cdots + a_n x_i^n$$

was used as the general type of each input variable.

The results of measurements are shown materials 2.

Here, government production-infrastructure investment, government living-infrastructure investment and inhabitant population were employed as the policy variables, and increment values of each economic index and the satisfaction degree index were calculated for 1979 in case these government investments and inhabitant population were assumed to increase at 1% respectively.

Table 1. Sensitive Analysis (Elasticity)

Economic Indicators			
Variable Names	Sensitivity (%)	Variable Names	Sensitivity (%)
PIP	0.0274 0.0211	FCPI	0.0472 0.0453
SIP	0.0922 0.0744	FCSP	0.0454 0.0353
GHP	0.1291 0.1224	WTI	0.0133 0.0132
NHP	0.1110 0.1111	PCE	0.0962 0.0963
CS	0.1611 0.1533	PFCC	0.2532 0.1961
CI	0.1003 0.1004	DTCP	0.1292 0.1293
PHI	0.0591 0.5864	GCE	0.1182 0.1183
NSE	0.2422 0.2454	CRS	0.0913 0.0912
PEI	0.6394 0.0454	FCS	0.2293 0.1774
IT	0.1402 0.1411	PI	0.1232 0.1233
GHE	0.1604 0.1623	PPI	0.0264 0.0211
DI	0.1222 0.1231	PFCP	0.0501 0.0390
TFCF	0.3092 0.3144	FCSE	0.2280 0.1773
WPI	−0.0589 −0.0391	FCPE	0.0441 0.0339
WSI	0.0102 0.0094	TIP	0.1439 0.1408
WTH	0.0284 0.0262	NLP	0.0970 0.0982

Note: Upper is Government Production-infrastracture investment
Lower is Government Living-infrastracture Investment

Table 2. Sensitive Analysis (Elasticity)

Satisfaction Incicators		
Variable Names	Prediction (1979)	Sensitivity (%)
SAT-1	0.2745	— 2.0281
SAT-2	7.6117	−2.4311 −0.8082
SAT-3	443.4496	— −0.7702
SAT-4	0.3032	0.0032 0.0029
SAT-5	−0.0626	−7.2960 −7.2904
SAT-6	0.3414	−0.0072 −0.0074
SAT-7	0.0026	0.4533 0.4582
SAT-8	0.6542	— —
SAT-9	1.7534	−19.3452
SAT-10	19.6784	0.5073 0.2044

Note: Upper is Government Production-infrastracture Investment
Lower is Government Living-infrastracture Investment
Upper is Inhabitant Population about SAT-9

The results are shown in Tables 1 and 2.

This analysis of change in the living standard (satisfaction degree) with that in economic policy variables has sense only to some extent, since living standard is defined by economic stracture and social-life stracture as discussed in Chapter 2.

In other words, it can be said that the living standard (satisfaction degree) is defined synthetically by the effects of economic stracture and social-life stracture, both of which are objective indicators, and by the interrelationship with these stractures.

4. Concluding Remarks

This study has tried to systematige socio-economic phenomena, which have complex causal relations with each other, from the viewpoint of living standard.

For elucidating the interrelated structure of a society and economy a systematic analysis including the examination of subjective data such as the 'Quality of Life' will be of importance in the future, in addition to the analysis mainly based on objective data as in this study. Moreover the analysis of dynamic changes in economic phenomena will also become necessary.

As discussed above, there are many difficulties in the systematization of socio-economic phenomena. It can be said, however, that the analysis based on a systematic viewpoint will have an important meaning and will be necessary to be advanced further for the development of comprehensive welfare policies in the future.

Appendix

GMDH Method is a method identifying and forecasting an essencially complex system developed by A. G. Ivakhnenko in 1971. It is a general method based on the principle of Heuristic Self Organization to treat a system in which :

i) a great many variables and parameters exist (of high dimention) ; ii) their mutual relations are nonlinear ; and iii) it is impossible theoretically and practically to find the relations between causes and results and between inputs and outputs.

GMDH is an effective method to solve social, economic and psycological pro-

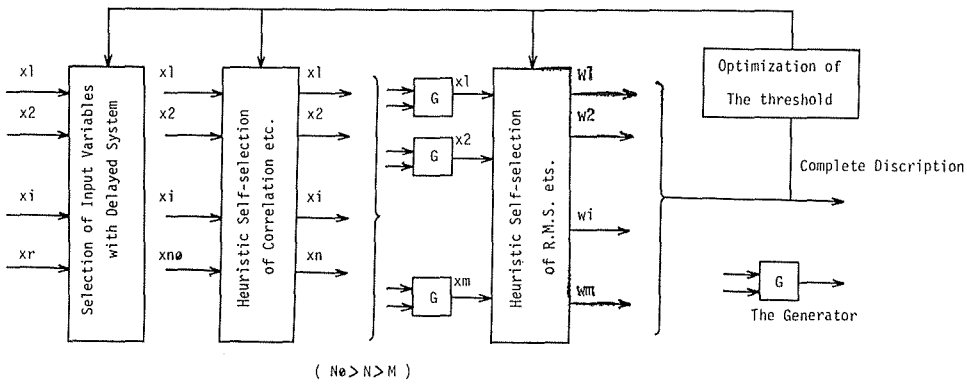

Fig. 3. Stracture of Fundamental GMDH Algorithm.

blems which constitute a complex system having dynamic and interrelated structure. It is an analytical method to analyze an essencially sophisticated system, common to the concept of cybernetics.

Algorithm in GMDH succeeds that of Perceptron which realizes Heuristic Self Organization conceptually. As algorithm presented by Ivakhnenko is an abstract one. I show in the following basic algorithm of polynominal approximation as a concrete case.

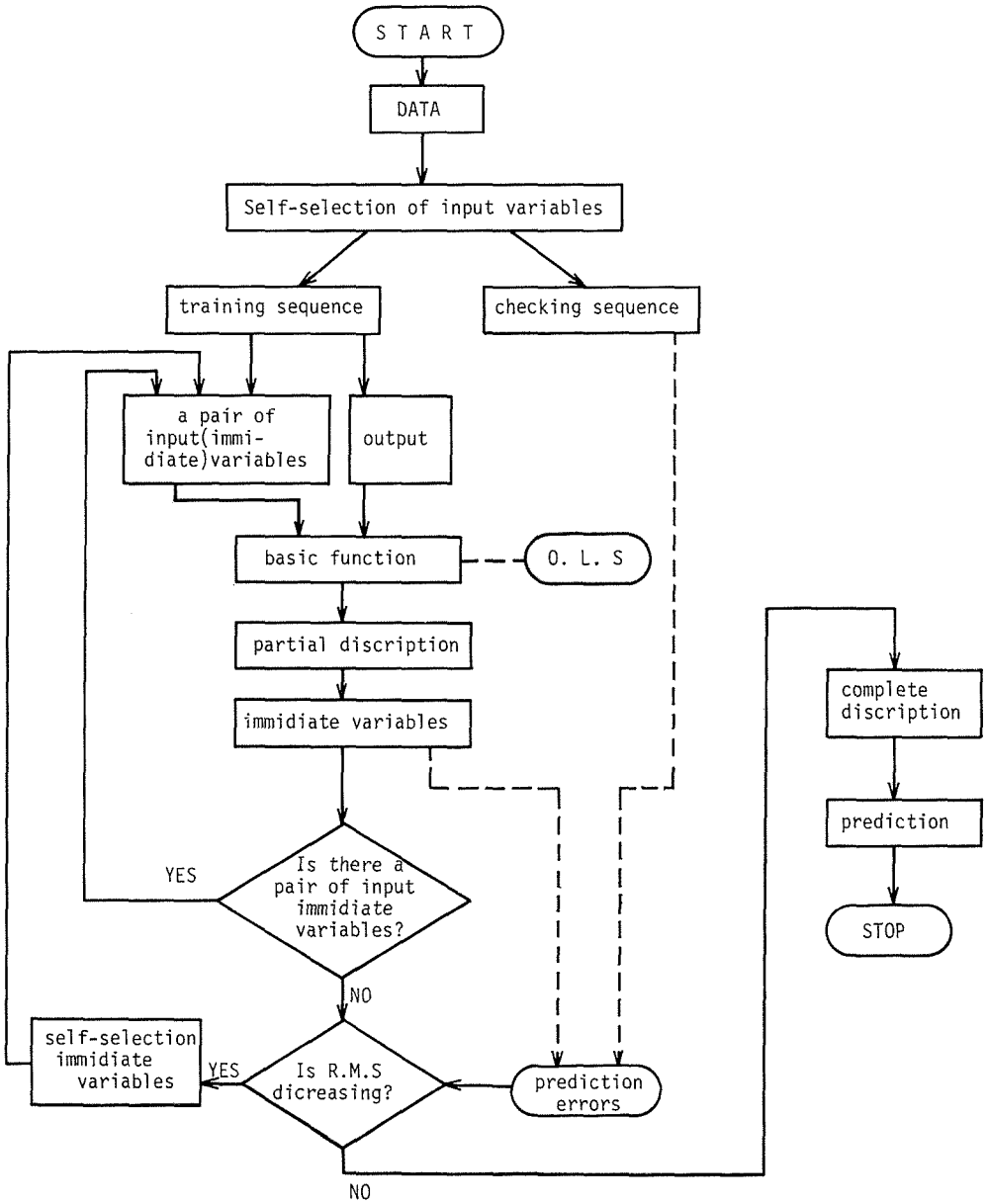

Fig. 4. Flowchart of GMDH Algorithm.

Inputed variables: $x_1, x_2, \cdots, x_m$

Outputed variables: y

For the case where the function type of non-linear function relations combining the both are not known at all, procedures will be examined.

$$y = f(x_1, x_2, \cdots, x_m)$$

when as a complete description polynomial of Kolmogorov-Gabor, which is polynomial approximation of a stationary stochastic process, is employed, the number of terms will become enormous and put trouble.

$$y = a_0 + \sum_{i=1}^{m} a_i x_i + \sum_{i=1}^{m} \sum_{j=1}^{m} a_{ij} x_i x_j + \sum_{i=1}^{m} \sum_{j=1}^{m} \sum_{k=1}^{m} a_{ijk} x_i x_j x_k + \cdots$$

Therefore, for the combination of appropriate variables (x_i, x_j), either of,

$$z_k = a_0 + a_i x_i + a_j x_j + a_{ij} x_i x_j$$

$$z_k = a_0 + a_i x_i + a_j x_j + a_{ii} x_i^2 + a_{ij} x_i x_j + a_{jj} x_j^2$$

will be used as an intermediate variable.

For z_k, there is a variety of ways of ${}_mC_2 = (m(m-1)/2)$ for selecting (x_i, x_j), among which a good one will be selected.

Employing this way, the identification of input-output relation f is performed.

References

(1) NNW developed by the Committee for NNW, Development in the Economic Council (1973): 'Indicator of New National Welfare-NNW'.

(2) Sohara Toshimitsu (1979): 'The Outline of UNRISD, Welfare and Development Indexes'. The Quarterly of Social Security Research. Vol. 18: No. 3. (in Japanese)

(3) O.E.C.D. (1973): 'How to Mesure Well-being OECD's Program to Develop a Set of Social Indicators'. OECD Observer: No. 64.

(4) (Kokumin-seikatsu shingikai) (1980): 'The Third Research of Preference in National Life'. (in Japanese)

(5) Uno Kimio (1974): 'Social Indicators and Macro Economic Framework'. The Japan of Economic Research: No. 3. (in Japanese)

(6) (Hokkaido-seikatsukankyobu) (1973): 'The Report of Research on Regional Preferences in Hokkaido in Life'. (in Japanese)

(7) Ivakhnenko, A. G. (1972): 'Prediction of Random Processes Using Self-Organization of the Prediction Equations'. Tekhnika Kiev.

Materials 1. System of Macro-econometric Model equations

(1) $WTI = 1707010.01 + 0.048591\ NHPt-1 + 0.10081\ POP$
(3.6659) (5.8884) (1.0920)
$R** = 0.901$ D, W = 0.496

(2) $LOG\ (WPI) = 29.34379 - 1.1152\ LOG\ (FCSP)$
(30.6026) (16.9519)
$R** = 0.947$ D, W = 0.854

(3) $WSI = 216576.12 + 0.00352\ NHPt-1 + 0.63921\ WSIt-1$
(5.7692) (13.0734) (9.5430)
$R** = 0.984$ D, W = 1.875

(4) $SIP = -2956640.0 + 5.456101\ WSI + 0.882901\ PPI + 0.013101\ FCS$
(1.4569) (1.4608) (1.2445) (1.0763)
$R** = 0.882$ D, W = 1.396

(5) $TIP = -1783040.0 + 1.756812\ WTH + 0.423901\ GHE$
(4.1334) (3.3107) (8.3285)
$R** = 0.998$ D, W = 1.642

(6) $LOG\ (PIP/WPI) = -0.978219 + 0.811599\ LOG\ (FCSP/WPI)$
(7.6595) (9.78618)
$R** = 0.857$ D, W = 1.131

(7) $LOG\ (PPI) = 0.085901 + 0.987798\ LOG\ (PIP)$
(0.0405) (6.19787)
$R** = 0.706$ D, W = 0.642

(8) $CS = -56264.101 + 0.036597\ GHP$
(2.8248) (10.2702)
$R** = 0.868$ D, W = 1.352

(9) $WTH = WTI - (WSI + WPI)$

(10) $GHP = -105236.1 + 1.169508\ (PIP + SIP + TIP)$
(1.5223) (82.3108)
$R** = 0.998$ D, W = 1.034

(11) $NHP = 43548.001 + 0.991305\ (GHP - (PFCC + IT) + CS)$
(6.9016) (731.191)
$R** = 0.999$ D, W = 0.777

(12) $PCE = 972184.012 + 0.530106\ DI$
(11.5423) (29.2039)
$R** = 0.982$ D, W = 0.561

(13) $GCE = -69911.502 + 0.178599\ NHP$
(2.10012) (24.9795)
$R** = 0.975$ D, W = 1.207

(14) $IT = 58094.8002 + 0.053426\ GHE$
(6.8209) (35.0555)
$R** = 0.987$ D, W = 0.751

(15) $NSE = 473664.112 + 0.183801\ NHP - 0.449981\ GHE$
(6.8479) (0.45605) (1.31150)
$R** = 0.984$ D, W = 2.015

(16) $GHE = -69710801 + 1.202122\ (PCE + GCE + TFCF + NSE + CRS)$
(5.8414) (52.3951)
$R** = 0.994$ D, W = 1.637

(17) $PHI = -2587.016 + 0.048039\ DIt-1 + 0.87051\ GLI + 0.00064\ POP$
(0.1399) (6.4977) (6.4601) (1.1919)
$R** = 0.989$ D, W = 1.093

(18) $PEI = 118655.16 + 1.5840201\ CIt-1 + 3.161012\ GPI$
(2.2162) (5.9277) (4.1956)
$R** = 0.931$ D, W = 1.341

(19) $FCPI = 42652.109 + 0.1354101\ PIPt-1 + 0.739813\ GAI + 0.030242\ NHPt-1$
(1.5674) (1.9732) (3.9246) (3.5931)
$R** = 0.978$ D, W = 1.537

(20) $CRS = 46121.3009 + 0.016628\ NHP + 47344.825\ DMY$
(2.05647) (3.51147) (2.01766)
$R** = 0.571$ D, W = 2.628

(21) $TFCF = PHI + PEI + GAI + GLI + GPI + GEI$

(22) $PI = -869168.01 + 1.308310\ NHP$
(3.1964) (22.3962)
$R** = 0.969$ D, W = 0.494

(23) $CI = 40239.8009 + 0.055907\ NHP$
(1.2916) (8.3492)
$R** = 0.813$ D, W = 1.015

(24) $DTCP = -43648.709 + 0.130502\ PI$
(1.5636) (24.7352)
$R** = 0.975$ D, W = 2.325

(25) $DI = PI - DTCP$

(26) $PFCC = -95487.04 + 0.0297103\ FCS$
(1.1684) (10.0707)
$R** = 0.864$ D, W = 1.335

(27) $PFCP = -48707.52 + 0.1532341\ FCSP$
(2.1259) (14.8612)
$R** = 0.932$ D, W = 1.215

(28) $FCS = TFCF + FCSEt-1$

(29) $FCSE = FCS - PFCC$

(30) $FCSP = FCPI + FCPEt-1$

(31) $FCPE = FCSP - PFCP$

(32) $NLP = NHP/WTI$

(33) $NLPP = PIP/WPI$

(34) NLPS=SIP/WSI

(35) NLPT=TIP/WTH

Materials 2. System of GMDH equations

⟨Domain-1: Health⟩

(1) Y4 = −0.01172−0.0625*GLI+1.125*(S·SAT1−b)−0.75*GLI**2
+0.5*GLI*(S·STA1−b)

(2) Y1 = (S·SAT1−c)−0.25*(S·SAT1−b)+0.25*(S·SAT1−c)*(S·SAT1−b)

(3) SAT1 = 0.000641+0.25*Y4+0.5625*Y1+0.125*Y4**2+0.375*Y1**2
−0.5*Y4*Y1

⟨Domain-2: Social welfere⟩

(1) X2 = −0.25+0.25*(S·SAT2−a)+0.75*(S·SAT2−c)+0.125*(S·SAT2−c)**2

(2) X3 = −0.78125−9.5*(S·SAT2−a)+10.25*(S·SAT2−b)
+7.0001*(S·SAT2−a)**2+7.0001*(S·SAT2−b)**2
−13.25*(S·SAT2−a)*(S·SAT2−b)

(3) X4 = −0.125+1.25*(S·SAT2−c)+DTCP**2−(S·SAT2−c)**2
+(S·SAT2−c)*DTCP

(4) Y1 = 0.14063+0.43066*X2+0.59375*X3+0.125*X2**2+0.062*X3**2
−0.125*X2*X3

(5) Y3 = 0.32031+0.1875*X4+0.8125*X2−0.25*X4**2−0.3125*X2**2
+0.25*X4*X2

(6) SAT2 = −0.00586+0.0625*Y3+0.9375*Y1+0.25*Y3*Y1

⟨Domain-3: Comfortableness⟩

(1) X3 = 1.50+5.0001*(S·SAT3−b)−4.0*(S·SAT3−c)−3.75*(S·SAT3−b)**2
+2.00001*(S·SAT3−b)*(S·SAT3−c)

(2) X1 = −0.20313+0.14844*(S·SAT3−c)+0.46875*(S·SAT3−a)
+(S·SAT3−c)**2−0.28125*(S·SAT3−a)**2
+0.01563*(S·SAT3−a)*(S·SAT3−c)

(3) X4 = 0.25+0.50*GLI+1.25*(S·SAT3−a)−0.40625*GLI**2
−0.375*(S·SAT3−a)**2−0.75*GLI*(S·SAT3−a)

(4) Y6 = −0.08594+0.125*X3+1.50*X1+0.125*X3**2−0.03125*X1**2

(5) Y5 = −0.04102+0.500001*X4+0.0625*X4**2−0.500012*X3*X4

(6) SAT3 = 0.35938*Y6+0.46875*Y5+0.02148*Y6**2+0.125*Y5**2
−0.0625*Y6*Y5

⟨Domain-4: Convenience⟩

(1) Y1 = −0.1878+1.0625*(S·SAT4−a)−0.0625*(S·SAT4−b)
+1.25*(S·SAT4−a)**2+2.00*(S·SAT4−b)**2
−2.50*(S·SAT4−a)*(S·SAT4−b)

(2) $Y5 = -0.09375 + 0.125*WTH + 0.875*(S \cdot SAT4 - a) + 0.0625*(S \cdot SAT4 - a)**2 - 0.125*WTH*(S \cdot SAT4 - a)$

(3) $SAT4 = 0.01001 + 0.875*Y1 + 0.2773*Y5 - 0.7959*Y1**2 - 0.32324*Y5**2 - 0.18359*Y1*Y5$

〈Domain-5 : Safety〉

(1) $X2 = 0.375 + 0.25*(S \cdot SAT5 - b) - 1.375*(S \cdot SAT5 - a) + 0.50*(S \cdot SAT5 - b)*(S \cdot SAT5 - a)$

(2) $X4 = DTCP - (S \cdot SAT5 - a) - 0.25*DTCP**2 + 0.25*(S \cdot SAT5 - a)**2 + DTCP*(S \cdot SAT5 - a)$

(3) $X6 = 1.03125 - 1.625*DTCP + 1.50*(S \cdot SAT5 - b) - 2.125*DTCP**2 - 1.6875*(S \cdot SAT5 - b)**2 + 4.00*DTCP*(S \cdot SAT5 - b)$

(4) $Y1 = -0.1875 - 0.1875*X4 + 0.875*X2 - 0.1875*X4**2 - 0.35938*X2**2 + 0.625*X2*X4$

(5) $Y3 = -0.54688 + 3.00*X6 - 0.9843*X4 - 2.1875*X6**2 - 0.59375*X4**2 + 2.25*X6*X4$

(6) $SAT5 = 0.03125 + 0.6875*Y3 + 0.25001*Y1$

〈Domain-6 : Educational calture〉

(1) $Y2 = -0.02344 + 0.60156*(S \cdot SAT6 - a) + 0.437*(S \cdot SAT6 - b) - 0.625*(S \cdot SAT6 - a)**2 + (S \cdot SAT6 - b)**2 - 0.50001*(S \cdot SAT6 - a)*(S \cdot SAT6 - b)$

(2) $Y4 = 0.03125 + 0.125*DI + 1.125*(S \cdot SAT6 - b) - 0.25*DI**2 - 0.25*(S \cdot SAT6 - b)**2 + 0.50001*DI*(S \cdot SAT6 - b)$

(3) $SAT6 = -0.01563 + 0.25*Y2 + 0.3125*Y4 - 0.1875*Y2**2 - 0.09375*Y4**2 + 0.4375*Y2*Y4$

〈Domain-7 : Leisure〉

(1) $Y5 = -0.07031 + 0.375*NLP + 0.67969*(S \cdot SAT7 - b) + 2.0001*NLP**2$

(2) $Y4 = 0.00879 + 0.03125*NLP + 0.96875*(S \cdot SAT7 - a) + 0.50001*NLP**2 + 0.375*(S \cdot SAT7 - a)**2 - 0.75*NLP*(S \cdot SAT7 - a)$

(3) $SAT7 = -0.00586 + 0.25*Y5 + 0.8125*Y4 - 0.03125*Y5**2 - 0.625*Y4**2 + 0.125*Y5*Y4$

〈Domain-8 : Participation〉

(1) $Y4 = 0.0625 - 0.375*(S \cdot SAT8 - c) + 0.50*(S \cdot SAT8 - d) + 2.00002*(S \cdot SAT8 - c)**2 + 2.50*(S \cdot SAT8 - d)**2 + 5.00003*(S \cdot SAT8 - c)*(S \cdot SAT8 - d)$

(2) $Y3 = -0.3125 + 2.50*(S \cdot SAT8 - a) - 3.50*(S \cdot SAT8 - b) + 2.00002*(S \cdot SAT8 - a)**2 + (S \cdot SAT8 - b)**2 - 3.0001*(S \cdot SAT8 - a)*(S \cdot SAT8 - b)$

(3) $SAT8 = 0.02527 - 0.33398*Y4 + 1.28906*Y3 - 0.6875*Y4**2 + 0.64063*Y3**2 + 0.3125*Y3*Y4$

〈Domain-9 : Population〉

(1) $X1 = -0.46875 - 4.75*(S\cdot SAT9 - a) - 3.125*(S\cdot SAT9 - b) + 1.75*(S\cdot SAT9 - a)**2 - 1.25*(S\cdot SAT9 - b)$

(2) $X3 = -0.32544 - 1.72656*POP - 3.03516*(S\cdot SAT9 - a) - 0.50002*POP**2 + 2.125*(S\cdot SAT9 - a)**2 + (S\cdot SAT9 - a)*POP$

(3) $X6 = -0.375 - (S\cdot SAT9 - c) + 1.25*POP + 2.75*(S\cdot SAT9 - c)**2 + 1.875*POP**2 + 3.50*(S\cdot SAT9 - c)*POP$

(4) $X5 = -0.625 - 1.25*(S\cdot SAT9 - a) + 0.25*(S\cdot SAT9 - c)**2 + (S\cdot SAT9 - a)**2 - (S\cdot SAT9 - c)*(S\cdot SAT9 - a)$

(5) $Y9 = 0.125 + 0.53125*X6 + 0.25*X1 - 0.0625*X6**2 + 0.1875*X1**2 - 0.125*X1*X6$

(6) $Y1 = 0.32813 + 0.75*X5 - 0.3125*X3 - 0.1875*X5**2 + 0.75*X3**2 - 0.625*X5*X3$

(7) $SAT9 = -0.01172 + 0.625*Y9 + 0.500012*Y1$

〈Domain-10 : Wealth〉

(1) $Y2 = 0.03125 + (S\cdot SAT10 - a) - GHP**2 - 0.500013*(S\cdot SAT10 - a)**2 + GHP*(S\cdot SAT10 - a)$

(2) $SAT10 = 0.03125 - 0.0625*Y2 + 0.9375*(S\cdot SAT10 - a) + 0.125*(S\cdot SAT10 - a)**2 - 0.125*Y2*(S\cdot SAT10 - a)$

Note : ** is the second power.

Materials 3. List of Variable Symbols

Variable Name	Symbol Name
S·SAT1—a	Per Capita Doctors
S·SAT1—b	Per Sick-Bed Nurses
S·SAT1—c	Per Capita Hospitals
S·SAT2—a	Per 18-40 Years Old Members of Young Men's Associations
S·SAT2—b	Per 0-5 Years Old Nursery Schools
S·SAT2—c	Per Capita Home-Helpers
S·SAT3—a	Per Annual Sunny Times
S·SAT3—b	Per House The Area of Floor
S·SAT3—c	Per Annual Rate Sawage Treatmentrying
S·SAT4—a	Per Household Telephones
S·SAT4—b	Per Capita Public Telephones
S·SAT5—a	Per Capita disastered Amount
S·SAT5—b	Per capita Policemen
S·SAT6—a	Rate of Entrance into High School
S·SAT6—b	Per Capita The Rental Service of a Liblary
S·SAT7—a	Per Capita Art-Culture Associations

S·SAT7—b	Per Capita Sports Facilities
S·SAT8—a	Per Capita The Rental Service of a Liblary
S·SAT8—b	Per 18-40 Years Old Member of Young Men's Associations
S·SAT8—c	Rate of Divorce
S·SAT8—d	Per Pupil Member of P.T.A
S·SAT9—a	Rate of Out-migrants
S·SAT9—b	Rate of Wokers of Thirdly Industry
S·SAT9—c	Rate of 20-29 Years Old
S·SAT10—a	Per Employment Products of Commerce

Materials 4. List of Variable Simbols

Simbol Names		Variable Names
WTI	:	Workers of Total Industry
WPI	:	Workers of Primary Industry
WSI	:	Workers of Secondary Industry
SIP	:	Secondary Industry Products (million yen)
TIP	:	Thirdry Industry Products (million yen)
PIP	:	Primary Industry Products (million yen)
PPI	:	Products of Propensity to Improvement (million yen)
CS	:	Current Subsidies (million yen)
WTH	:	Workers of Thirdly Industry
GHP	:	Gross Hokkaido Products (million yen)
NHP	:	Net Hokkaido Products (million yen)
PCE	:	Private Consumption Expenditure (million yen)
IT	:	Indirect Taxes (million yen)
NSE	:	Net Shipment and Export (million yen)
GHE	:	Gross Hokkaido Expenditure (million yen)
PHI	:	Private Housing Investment (million yen)
PEI	:	Private Equipment Investment (million yen)
FCPI	:	Fixed Capital Formation of Primary Industry (million yen)
CRS	:	Crease in Stocks (million yen)
TFCF	:	Total Fixed Capital Formation (million yen)
PI	:	Personal Income (million yen)
DTCP	:	Direct Taxes and Charges on Persons (million yen)
CI	:	Corporate Income (million yen)
DI	:	Disposable Income (million yen)
PFCC	:	Provisions for Fixed Capital Consumpsion (million yen)
PFCP	:	Provisions for Fixed Capital Consumpsion of Primary Industry
FCS	:	Fixed Capital Stock (million yen)
FCSE	:	Fixed Capital Stock at The End of Fisical Year (million yen)
FCSP	:	Fixed Capital Stock of Primary Industry

FCPE : Fixed Capital Stock of Primary Industry at The End of Fisical Year (million yen)
NLP : Net Labor Productivity (million yen)
NLPP : Net Labor Productivity of Primary Industry (million yen)
NLPS : Net Labor Productivity of Secondary Industry (million yen)
NLPT : Net Labor Productivity of Thirdly Industry (million yen)
GLI : Government Living-infrastructure Investment (million yen)
GAI : Government Primary industry-infrastructure Investment (million yen)
GPI : Government Production-infrastructure Investment (million yen)
GEI : Government Etc-infrastructure Investment (million yen)
POP : Inhabitant Population

(*Received 31 August 1984*)