HOKKAIDO UNIVERSITY

Title	Testing the Technologies : Demonstration Grid-Connected Photovoltaic Projects in Japan
Author(s)	Hara, Ryoichi; Kita, Hiroyuki; Tanabe, Takayuki; Sugihara, Hiroyuki; Kuwayama, Akira; Miwa, Shuya
Citation	IEEE Power and Energy Magazine, 7(3), 77-85 https://doi.org/10.1109/MPE.2009.932310
Issue Date	2009-05
Doc URL	http://hdl.handle.net/2115/38532
Rights	(c) 2009 IEEE. Personal use of this material is permitted. However, permission to reprint/republish this material for advertising or promotional purposes or for creating new collective works for resale or redistribution to servers or lists, or to reuse any copyrighted component of this work in other works must be obtained from the IEEE.
Type	article
File Information	7-3_p77-85.pdf

Instructions for use

Hokkaido University Collection of Scholarly and Academic Papers : HUSCAP

Testing the Technologies

Demonstration Grid-Connected Photovoltaic Projects in Japan

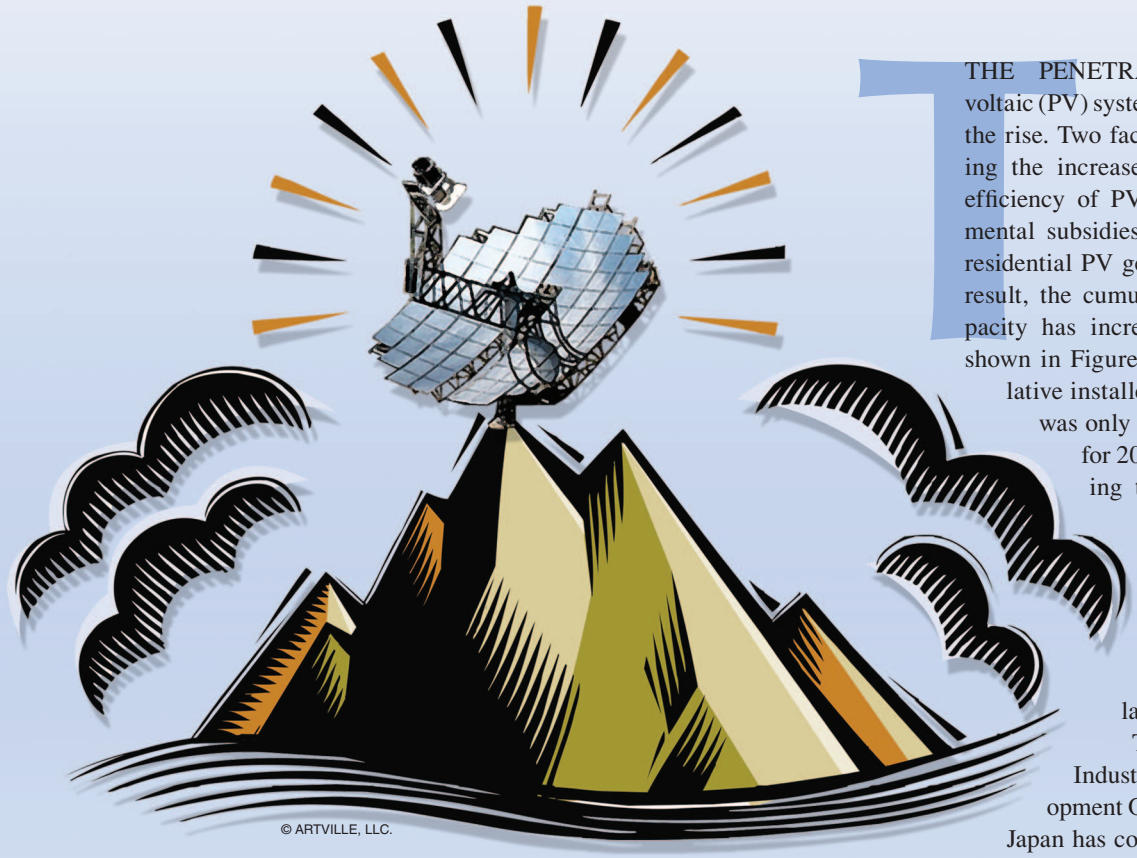

© ARTVILLE, LLC.

by Ryoichi Hara, Hiroyuki Kita, Takayuki Tanabe, Hiroyuki Sugihara, Akira Kuwayama, and Shuya Miwa

Digital Object Identifier 10.1109/MPE.2009.932310

THE PENETRATION OF PHOTOvoltaic (PV) systems in Japan has been on the rise. Two factors have been promoting the increase: improved generation efficiency of PV modules and governmental subsidies for the initial cost of residential PV generation systems. As a result, the cumulative installed PV capacity has increased exponentially, as shown in Figure 1; however, the cumulative installed PV capacity by 2007 was only about 40% of the target for 2010 (4,820 MW). Reaching the target and promoting larger installation capacities in the future will require further installation in the residential sector and the construction of large-scale PV systems.

The New Energy and Industrial Technology Development Organization (NEDO) of Japan has conducted several demonstration projects to investigate technological issues regarding the large penetration of PV generation systems and to develop new technologies for using PV generation systems effectively. One of NEDO's demonstration grid-connected PV projects is the Ohta Project, a cluster of PV systems in a residential development. Another is the Wakkanai Project, the largest central-station PV system in Japan.

1540-7977/09/$25.00©2009 IEEE

Authorized licensed use limited to: HOKKAIDO DAIGAKU KOHGAKUBU. Downloaded on May 31, 2009 at 20:48 from IEEE Xplore. Restrictions apply.

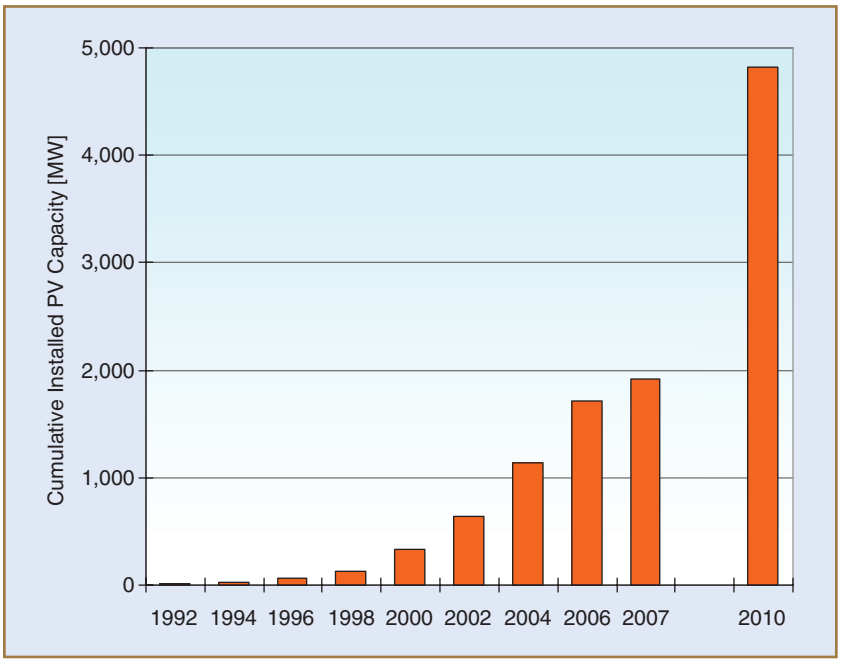

figure 1. Trend of cumulative installed PV capacity in Japan and the target for 2010.

Clustered Residential PV Systems (Ohta Project)

During the rapid growth and expansion of grid-connected PV systems, we expect that many PV systems will be installed in a small, limited area of a distribution network. We call this scenario "clustered PV systems." Some problems may occur in this situation. In Japan, the power conditioning systems (PCSs) of grid-connected PV systems must restrict their power output to prevent overvoltage of the distribution line caused by reverse power flow. Other problems include unintentional island operation when the power supply is interrupted, as well as increased harmonic current distortion from the PCSs of many PV systems. Because these problems can adversely affect the electric power quality of the distribution network, the inclusion of PV systems might be restricted. From December 2002 to March 2008, NEDO conducted a project called "Demonstrative Research on Clustered PV Systems" to investigate and solve these problems. About 550 PV systems were installed on the roofs of houses in a single subdivision (Figure 2) and connected to the utility in the demonstration research area in Ohta, Japan (Figure 3). The total nominal output power is more than 2 MW.

The distribution network in Japan is designed so that the electric power is supplied to the residential load from a high-voltage (HV) network of 6,600 V and through a low-voltage (LV) network of 100/200 V. Most grid-connected residential PV systems are rated between 3 and 5 kW in capacity and connected to a single-phase LV line at 200 V. Compared with other countries, the voltage of the HV and LV distribution networks is lower, and the ratio of resistance to reactance (R/L) is higher; therefore, the voltage rises easily by reverse power flows from PV systems. In the Electricity Utilities Industry Law of Japan, the voltage range of the LV distribution line is defined within 101±6 V. The voltage of HV distribution networks is usually maintained as high as possible because of a voltage drop caused by load flow toward the end of the LV distribution line. Under this operation method, if many PV systems are installed in the distribution network, the voltage will rise during reverse power flow from the PV systems, and it becomes difficult to maintain the voltage within the normal operating range. If a voltage rise occurs, the grid-connected PV system is requested to restrict its output power. If only a few PV systems are installed, the voltage rise is low and this countermeasure is sufficient. But clustered PV systems can create a large reverse power flow that will reach the HV distribution network; the concern then is that the PV systems will be unable to generate power due to a high-voltage condition, as shown in Figure 4. In the demonstration research project, storage batteries integrated with the PV systems were developed to effectively use the energy that may be lost if the output power restriction were activated.

When a fault occurs in the distribution networks, PV systems must stop generating power immediately to

figure 2. Jyousai-no-mori, Ohta, Gumma, Japan (used with permission from NEDO).

Authorized licensed use limited to: HOKKAIDO DAIGAKU KOHGAKUBU. Downloaded on May 31, 2009 at 20:48 from IEEE Xplore. Restrictions apply.

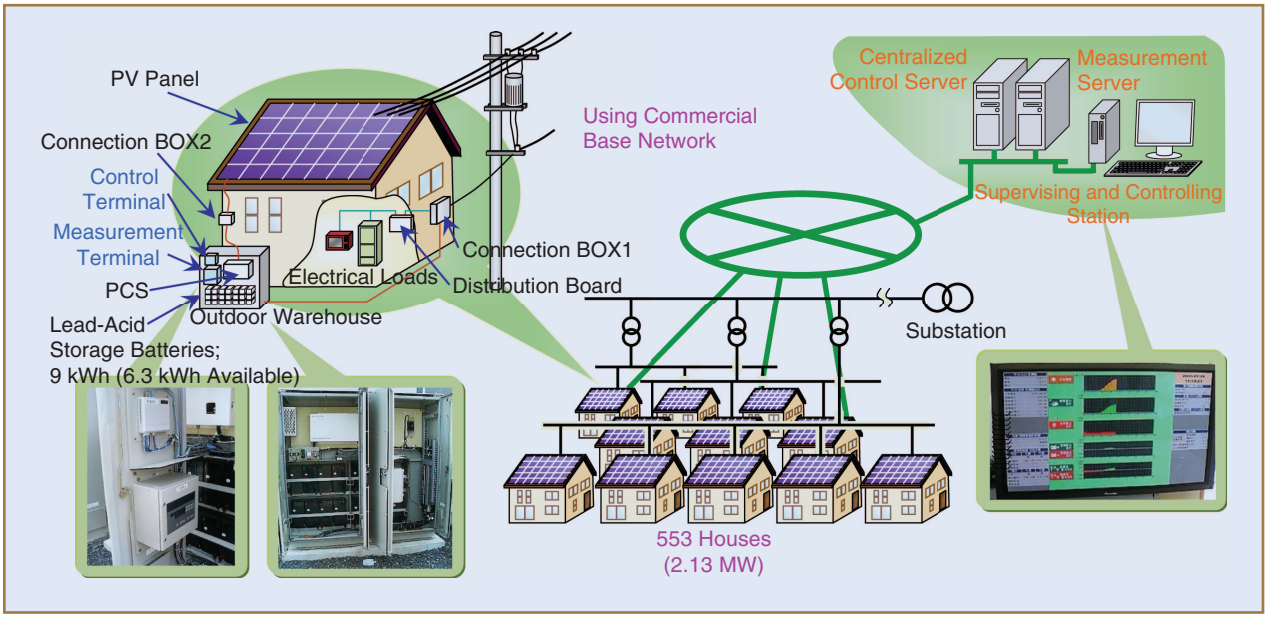

figure 3. An overview of the system components in the demonstration research project.

maintain safety. However, if the power supplied from PV systems is equal to the load demand, the PV systems cannot detect an interruption of power supply from the main utility, and the PV systems might continue to generate power. This operational state is called "unintentional islanding," and it should be avoided to maintain safe operations. Accordingly, the PV system has an islanding detection system (IDS) to avoid the islanding operation. The IDS uses two detection methods—passive and active—to detect the islands. In the active method, the islanding operation is detected under the perfectly balanced condition by always giving a disturbance, such as a reactive power fluctuation, to the utility grid. However, if multiple PV systems were connected to the distribution network, disturbances would interfere mutually, and the detection sensitivity of the IDS might decrease. Furthermore, if a coil-contact fault occurs in the transformer, the IDS must detect islanding operation within a very short time, as shown in Figure 5. The limited number of PV systems that can be connected to the same distribution network is determined by the condition that allows the IDS to operate safely. In the demonstration research project, we developed a new fast-detection IDS that does not interfere with utility operations.

PCSs produce an alternating current (ac) from the direct-current (dc) semiconductor power sources. Consequently, it is feared that the PCSs of clustered PV systems might cause increased harmonic current distortion on the distribution network. However, analyzed results from the research project indicated no problems with the current because the PCSs that were used had pulse-width-modulated inverters that produced a very smooth output current.

Here, we focus on the voltage-rise problem and the specifications, operation, and performance of a PV system with an integrated storage battery.

Integrated Energy Storage and Battery Management

The project used a lead-acid storage battery because it was the most popular energy storage technology at the start of the research period. The capacity of the PV systems was chosen to be 3 to 5 kW because this is the standard capacity of residential PV systems in Japan. The storage battery system was then installed in all PV systems. The lead-acid storage battery has a capacity of about 9 kWh and reaches 4,900 Ah, which is the upper bound regulated by the Fire Service Law in Japan.

The depth of discharge (DOD) for the lead-acid battery was maintained between 0% and 70% in normal operation to increase battery lifetime. Therefore, the effective energy capacity was about 6.3 kWh. The electric load demand of an average household during the day is between

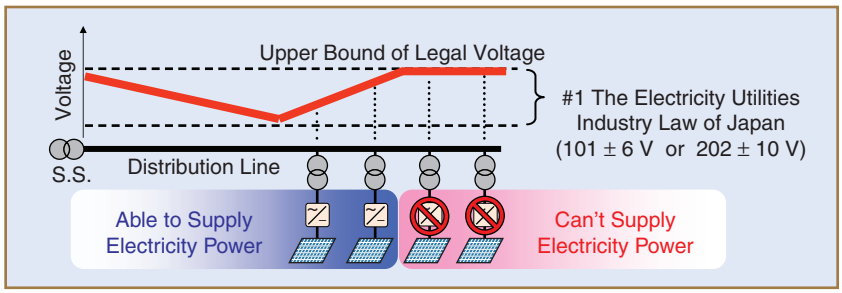

figure 4. A problem of output power restriction caused by a voltage rise.

Authorized licensed use limited to: HOKKAIDO DAIGAKU KOHGAKUBU. Downloaded on May 31, 2009 at 20:48 from IEEE Xplore. Restrictions apply.

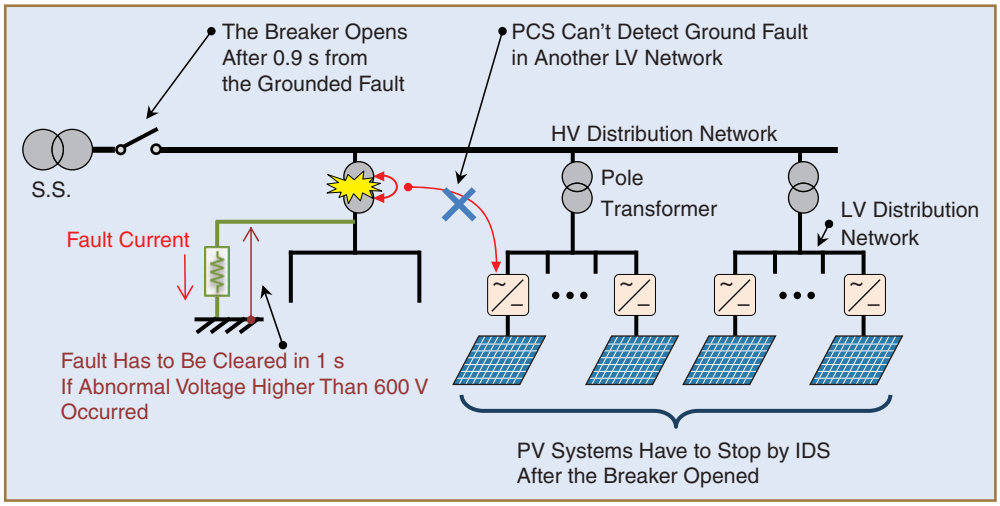

figure 5. The problem of islanding operation under the strictest condition.

500 W and 1 kW. If all surplus power generation from the 4-kW PV system is used to charge the storage battery, its capacity will reach full charge at around noon.

Two kinds of circuit configurations were developed for storage-battery-integrated PV systems: an ac link system and a dc link system. The ac link system has separate ac-dc converters for the PV array and storage battery. The dc link system has a common ac-dc converter for the PV array and storage battery. Circuit diagrams are shown in Figure 6.

The storage-battery-integrated PV system recovers the energy that would have been lost when voltage is over the limitation value. Because the risk of overvoltage is higher when the reverse power flow is larger, the state of charge (SOC) of the storage battery should not be full at around noon. Therefore, for efficient operation of the storage battery, only part of the surplus power that is greater than the load demand should be charged into the storage battery.

Also, four problems must be considered when operating the storage battery.

1) The storage battery must maintain a discharged state in the morning to prepare for the charging around noon.
2) If the lead-acid battery is left in a discharged state, it may deteriorate and shorten the lifetime.
3) The frequency of use of the storage batteries may be varied by the impedance of the distribution line and by a power-flow condition.
4) There are round-trip energy losses of the storage battery and PCS increases when charging and discharging larger amounts of energy.

To solve these problems, four operation methods were proposed for this storage-battery PV system: restrained reverse power flow operation, scheduled operation, peak-shift operation, and voltage control operation. These operation methods are outlined in Figure 7.

The restrained reverse power flow operation is a basic operation mode, and it maintains—as much as is possible—a constant power flow at the point of common coupling (PCC) of a house. The scheduled operation maintains constant charging power of a storage battery for a period of time decided beforehand. The peak-shift operation can keep the amount of reverse power flow at the PCC of the house at a constant value determined beforehand; therefore, it has the same effect as the

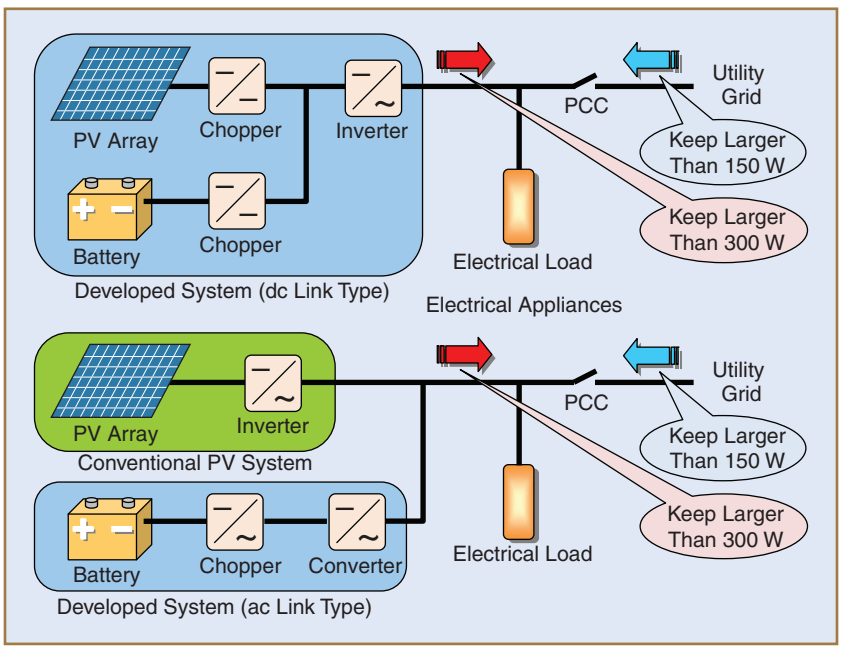

figure 6. Circuit configurations of storage-battery-integrated PV systems.

Authorized licensed use limited to: HOKKAIDO DAIGAKU KOHGAKUBU. Downloaded on May 31, 2009 at 20:48 from IEEE Xplore. Restrictions apply.

Concerns about the environment and energy security have led to great worldwide interest in the further use of renewable energy.

scheduled operation. The voltage control operation is a direct method to deter output power restriction compared with another operation mode. This operation mode is activated to charge the storage battery only when the voltage is rising.

Evaluating Battery Integration with the PV Systems

In the demonstration research project, the performance of these operation methods was evaluated by experiments and digital simulations. These four battery operation methods have both advantages and disadvantages. The merits and demerits of these operation methods were evaluated. To assume the evaluation under the same condition, the operation of ten days was evaluated by digital simulation. In this simulation, we used patterns of load demand and generation that were actually measured and focused on modeling a LV network consisting of ten houses connected to a certain pole transformer. Three evaluation points were selected: the amount of output power restriction, charge and discharge loss, and SOC transition of the storage battery. For the ten days that were evaluated, maximum, minimum, and mean values were determined for ten houses, and the results are shown in Figure 8. The amount of the output power restriction and charge and discharge loss was smallest when the voltage control operation was applied; accordingly, the operation can manage this system effectively. The amount of output power restriction was almost the same among the other operational modes. However, the charge and discharge losses were different among the operational modes. Battery losses varied widely in each house when the restrained reverse power flow operation and the peak-shift operation were applied because the residential load demand influences the amount of charging power in these operations. On the other hand, in the voltage control operation, the SOC mean value was the lowest, and the SOC maximum value varied widely. Therefore, there are systems in which this function operates frequently and other systems in which it hardly operates. The scheduled operation keeps the rate of battery usage flat, and the voltage control operation has the lowest total energy loss. The peak-shift operation is easily influenced by the amount of the residential load demand; therefore, it is difficult to operate effectively.

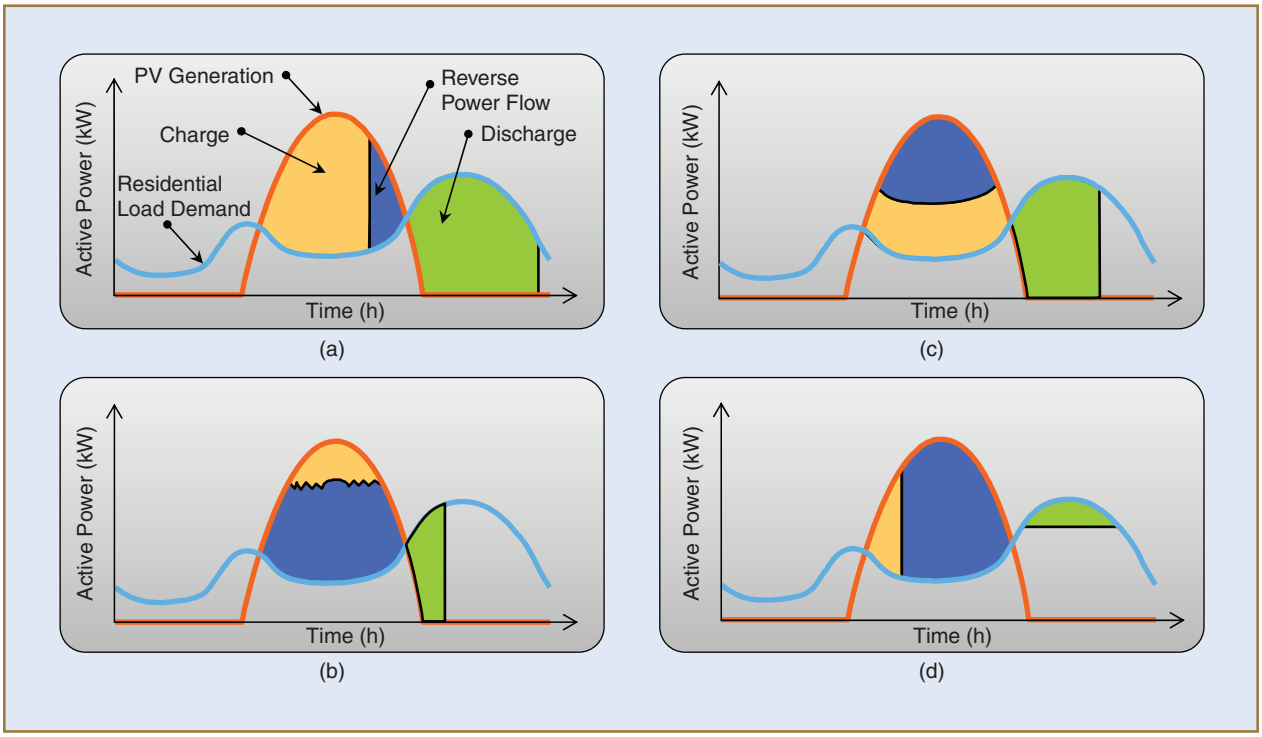

figure 7. An outline of four proposed operation methods. (a) Restrained reverse power flow operation. (b) Scheduled operation. (c) Peak-shift operation. (d) Voltage control operation.

Authorized licensed use limited to: HOKKAIDO DAIGAKU KOHGAKUBU. Downloaded on May 31, 2009 at 20:48 from IEEE Xplore. Restrictions apply.

The Ohta Project demonstrated two configurations of the storage-battery-integrated PV systems and four types of battery operation methods.

Project Results

The Ohta Project demonstrated two configurations of the storage-battery-integrated PV systems and four types of battery operation methods. The merits and demerits were evaluated by the demonstration experiments and by a digital simulation that used real measured data. Verification results show that it is most desirable to install battery systems that apply the voltage control operation only in specific locations because it can control losses of charge, discharge, and output power restriction. This can minimize the initial cost required to effectively integrate a clustered PV area. However, the specific locations for the energy storage are difficult to identify because the degree of rising voltage is influenced by impedance of the distribution network, the magnitude of residential demand power, and the capacity of the PV array.

Large-Scale Central-Station PV (Wakkanai Project)

The MEGA-SOLAR demonstration project, "Verification of Grid Stabilization with Large-Scale PV Power Generation Systems," began in 2006 in Wakkanai, the northernmost city of Japan. Wakkanai has very harsh climate conditions, such as strong winds, abundant snowfall, and frigid temperatures. However, these severe conditions are recognized as offering an ideal environment for conducting feasible studies of large-scale PV power generation systems.

The following activities were the focus of the project:

1) construct a large-scale (megawatt) PV power generation system and develop grid-stabilization technology
2) develop an output control technology for large-scale PV power generation systems on the order of several hours
3) develop a harmonic suppression technology
4) develop a simulation technology
5) create a handbook with guidelines for implementing large-scale PV power generation systems.

Six consortium members of the project are carrying out these activities. Hokkaido Electric Power Co. Inc.

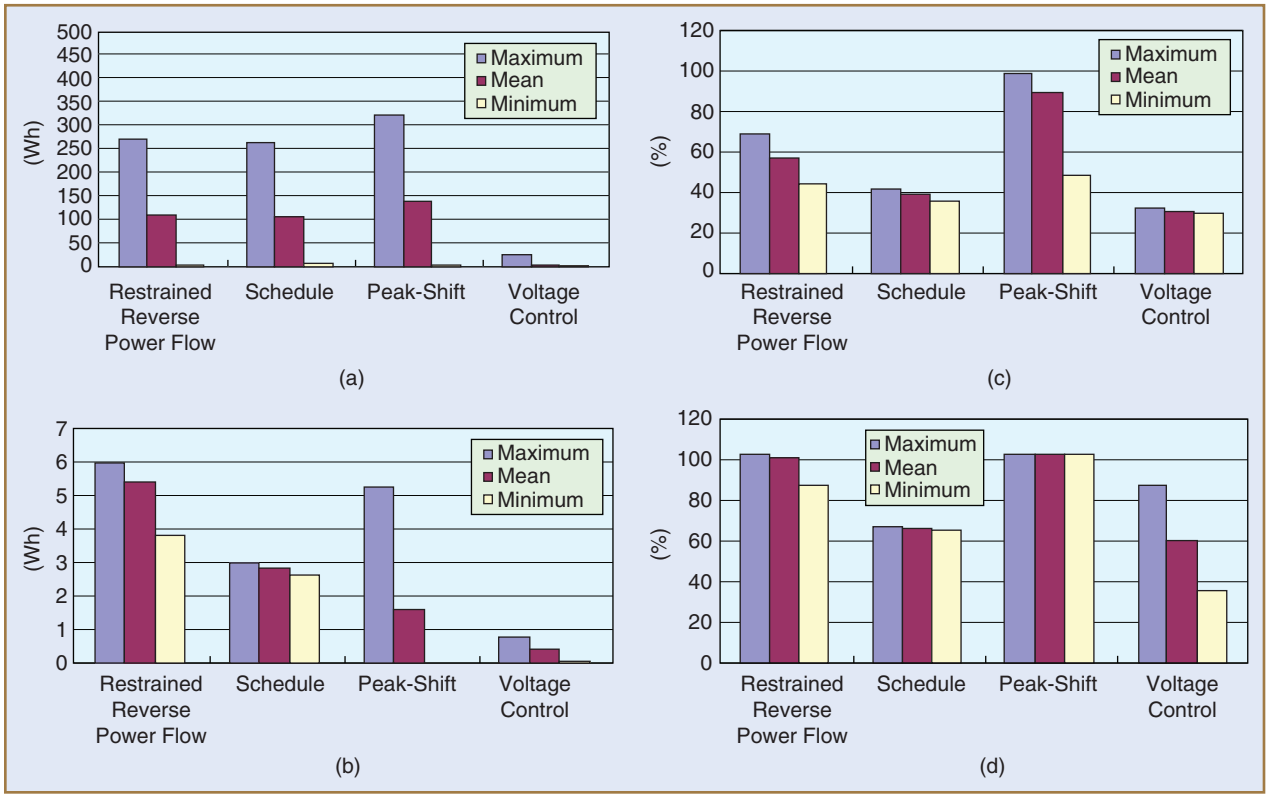

figure 8. Evaluation results of storage-battery operation in 10 d. (a) Restricted power caused by voltage rising. (b) Charge and discharge loss. (c) Mean value of SOC. (d) Maximum value of SOC.

Authorized licensed use limited to: HOKKAIDO DAIGAKU KOHGAKUBU. Downloaded on May 31, 2009 at 20:48 from IEEE Xplore. Restrictions apply.

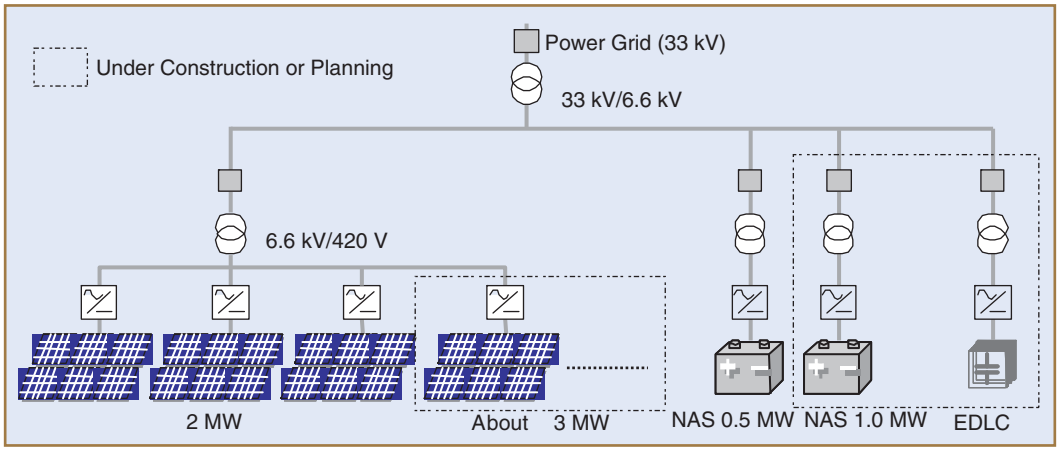

figure 9. System configuration of the Wakkanai mega solar power station.

(HEPCO) manages the overall project. Wakkanai has provided the site acreage for the project. Meidensha Corporation is responsible for constructing system components, such as the PCS and control system. Panasonic Environmental Systems & Engineering Co. Ltd. is responsible for supplying and evaluating PV module performance. The Japan Weather Association collects climate data and provides radiation forecasting data. Hokkaido University analyzes the power system and develops control strategies.

The system configuration of the project is shown in Figure 9. This demonstration project is a five-year effort that will continue until March 2011. Some 4 MW of PV modules and a 1.5-MW sodium-sulfur (NAS) battery system have already been constructed and are in operation. This system connects to HEPCO's 33-kV power grid, as shown in Figure 9. As planned, the final system will consist of 5 MW of PV, a 1.5-MW NAS battery, and a 1.5-MW electric double-layer capacitor (EDLC) (Figure 10). This project is also being conducted in cooperation with another NEDO PV power generation system project (about 2 MW) in Hokuto, Yamanashi Prefecture.

The major objectives of this project are to evaluate adverse impacts of large-scale PV power generation systems connected to the power grid and develop output control technologies with integrated battery storage. The NAS battery is designed to absorb fluctuations in PV output within its limit of kW and kWh capacities. For more efficient and effective operation of the NAS battery, several control algorithms of a battery system for smoothing PV output are developed and examined. The project also studies methods for scheduled operation using solar radiation forecasts.

Suppressing Output Fluctuations from the PV System

Large-scale PV power systems might adversely impact a smaller or weaker electric power system because the PV generation output may fluctuate greatly. Control schemes have been developed to smooth such fluctuations in PV generation output using the NAS battery.

An example of field test results is shown in Figure 11. This field test used only 2 MW of the PV and 0.5 MW of the NAS battery. From 8:00 a.m. to 11:00 a.m., the NAS battery was controlled so that the station output could track the moving average of the PV output. Because the magnitude of PV fluctuations exceeded the kW capacity of the NAS battery after 11:00 a.m., a more suitable control algorithm was activated, and the NAS battery was controlled so that the station output could follow the center of the previous PV fluctuation width. These control schemes could suppress the

figure 10. Overview image of the Wakkanai mega-solar power station (planned final system).

Authorized licensed use limited to: HOKKAIDO DAIGAKU KOHGAKUBU. Downloaded on May 31, 2009 at 20:48 from IEEE Xplore. Restrictions apply.

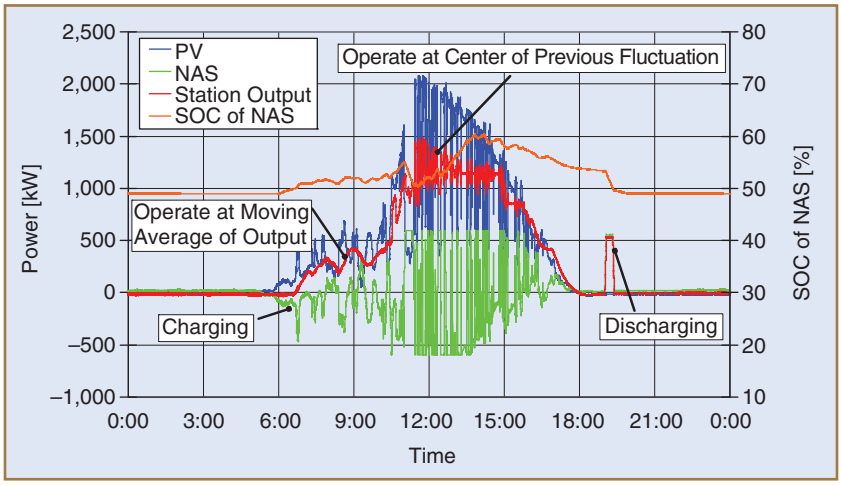

figure 11. Field test result of fluctuation suppression.

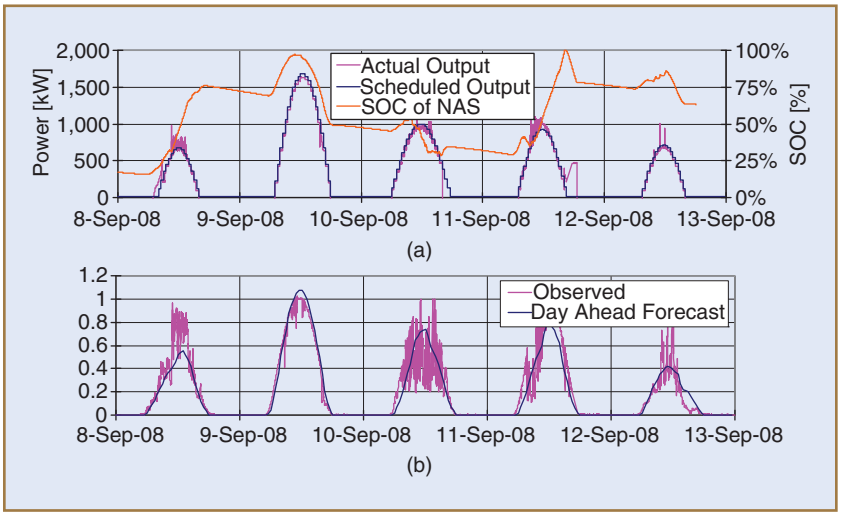

figure 12. Field test results of scheduled operation: (a) forecasted and observed radiation and (b) result of 5-d scheduled-operation test.

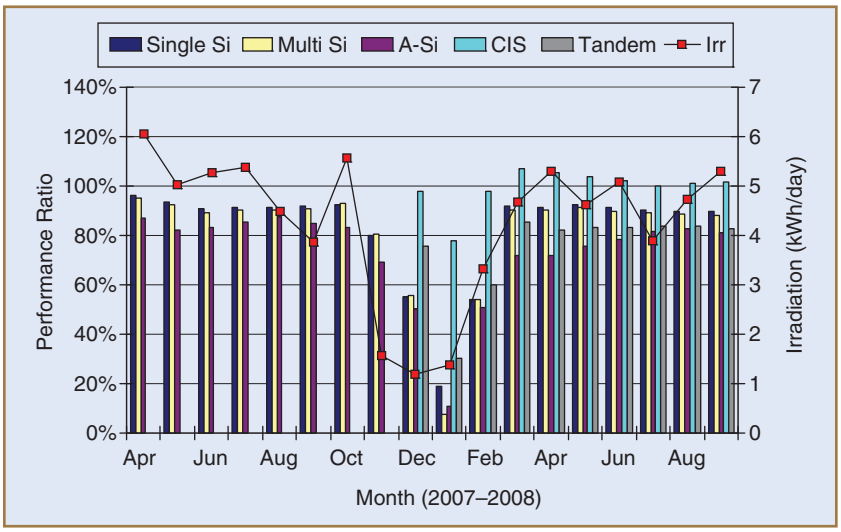

figure 13. PV PR.

maximum fluctuation width of about 1.7 MW (observed in the PV output) to about 0.6 MW (observed in the station output).

Scheduled Operation of the PV Power Station

For the PV power producer and electric power system operator, it is advantageous to operate a PV power plant on a schedule as they would any other controllable generator, such as a hydro or thermal power plant. Developing scheduled-operation technologies using an energy-storage system is one of the most important objectives of the project. In the scheduled operation, the station output for the next day is determined based on the PV output power estimated from the solar radiation forecast data provided by the Japan Weather Association. Mismatch between the scheduled station output and actual PV output is absorbed by the NAS battery. Therefore, the accuracy of the solar radiation forecast is very important in the scheduled operation. In the project, various forecast techniques and meteorological observation data are applied to refine the accuracy of the day-ahead, hourly, and every-10-min solar radiation forecasts provided by the data from the numerical weather forecasting system. Statistical performance evaluation revealed that the current root-mean-square error (rmse) of the day-ahead radiation forecasts at the Wakkanai site is about 0.2 kW/m^2.

Figure 12 shows the difference between forecasted and observed radiation values and the result of five-dayscheduled-operation tests. In this case, a next-day's operation schedule is determined using a day-ahead radiation forecast provided at 16:00 (4:00 p.m.) every day and indicates every 30-min station output reference with the shape of a sine curve in a day. In this five-day case, the operation schedule for two days (10 and 11 September) had to be modified because the kWh capacity of the NAS battery is less than is needed to absorb the radiation forecasting errors. Our urgent mission is to develop optimal

Authorized licensed use limited to: HOKKAIDO DAIGAKU KOHGAKUBU. Downloaded on May 31, 2009 at 20:48 from IEEE Xplore. Restrictions apply.

We focused on the voltage-rise problem and the specifications, operation, and performance of a PV system with an integrated storage battery.

planning methods that are robust against the forecasting error and to improve the solar radiation forecast.

Determination of PV Output Characteristics

The project also collects PV module performance data under variable conditions, including abundant snowfall and winter temperatures. We analyzed the differences in characteristics among each type of PV module: single-crystalline silicon, multicrystalline silicon, amorphous silicon, multilayer (tandem) thin films, and copper indium diselenide (CIS).

Figure 13 shows the monthly performance ratio (PR) of each type of module, where PR is the ratio of actual generated energy during the evaluation period to the energy theoretically available under the same meteorological circumstance. Crystalline-silicon modules have a high PR value of about 90% because summer temperatures are relatively low in Wakkanai. CIS also shows a high PR value, where the output sometimes exceeds the rated capacity. In the winter, from December to February, PR is extremely low due to the snow accumulation on the PV array (Figure 14). The impact of snow accumulation varies with the kind of module and layout of the module installation. The performance data obtained, as well as a comparison with the data analyzed at the Hokuto site, will be discussed in greater depth.

figure 14. Snow accumulation on the PV array.

Harmonics Generated from the Power Station

In March 2008, 20 PCS units (10, 100, and 250 kW) were installed for the 2 MW of PV modules, and one PCS unit (500 kW) was installed for the 0.5-MW NAS battery. In such a situation, the impact of the total harmonics inflow current is also of great concern. Our field harmonics monitoring and analysis showed that the total harmonics inflow current from the PV power station into the power grid is much lower than the allowable limit regulated by the Japanese guideline. Although no serious impacts of harmonics inflow current can be observed in our demonstration project, field harmonics monitoring will be conducted continuously for further system expansions.

Conclusions

Concerns about the environment and energy security have led to great worldwide interest in the further use of renewable energy. After the 2008 G-8 summit conference, the Japanese government decided to restart the subsidy program for residential sectors. Some electrical power companies in Japan have also decided to construct PV generation power stations in the megawatt or tens of megawatt class. We believe that PV generation systems will be a key technology in upcoming energy systems that are more efficient and have lower environmental impacts.

Acknowledgments

The demonstration projects introduced in this article are conducted by NEDO with much support from the consortium members of each project.

Biographies

Ryoichi Hara is an associate professor at Hokkaido University.

Hiroyuki Kita is a professor at Hokkaido University.

Takayuki Tanabe is with the Power Systems Solution Sales Engineering Division at Meidensha Corporation.

Hiroyuki Sugihara is a general manager of the Research and Development Department at Kandenko Company Ltd.

Akira Kuwayama is with the PV Project Promotion Office in the Research and Development Department of HEPCO.

Shuya Miwa is with the PV Project Promotion Office in the Research and Development Department of HEPCO.

Authorized licensed use limited to: HOKKAIDO DAIGAKU KOHGAKUBU. Downloaded on May 31, 2009 at 20:48 from IEEE Xplore. Restrictions apply.