Continuous observations of atmospheric and oceanic CO_2 using a moored buoy in the East China Sea: Variations during the passage of typhoons

K. Nemoto,[1] T. Midorikawa,[2*] A. Wada,[3] K. Ogawa,[1] S. Takatani,[1]
H. Kimoto,[4] M. Ishii,[2] and H. Y. Inoue[5]

[1] Global Environment and Marine Department, Japan Meteorological Agency, Otemachi 1-3-4, Chiyoda-ku, Tokyo 100-8122, Japan

[2] Geochemical Research Department, Meteorological Research Institute, Nagamine 1-1, Tsukuba 305-0052, Japan

[3] Typhoon Research Department, Meteorological Research Institute, Nagamine 1-1, Tsukuba 305-0052, Japan

[4] Kimoto Electric Co. Ltd., 3-1, Funahashi-cho, Tennoji-ku, Osaka 543-0024, Japan

[5] Graduate School of Environmental Earth Science, Hokkaido University, N10W5, Kita-ku, Sapporo 060-0810, Japan

* Corresponding author. Email: midorika@mri-jma.go.jp
Fax: +81-29-853-8728

Abstract

An automatic measuring system for the partial pressure, pCO_2, of atmospheric and oceanic carbon dioxide was developed. The system was mounted on a moored buoy for routine observation of maritime meteorology in the East China Sea. CO_2 observations were conducted from 29 June 1997 to 6 January 1998. During the observation period, the atmospheric pCO_2 showed little variation (341 to 365 μatm), whereas pCO_2 in the surface water varied significantly (308 to 408 μatm). In the summer, pCO_2 was higher in the surface water than in the overlying atmosphere, implying that this area was a source for atmospheric CO_2, though it became a sink after late September. Time series data clearly exhibited significant short-term variations in the oceanic pCO_2, *i.e.*, sudden variations during the passage of typhoons, and diurnal variations driven by the diurnal variations in the sea-surface temperature under calm conditions. The effects of typhoons on ocean–atmosphere CO_2 exchange at the surface could differ, depending on the relative position of the mooring site with respect to the center of the moving typhoons. These differences result from the different contributions of sea-surface cooling, entrainment, and upwelling. The efflux enhanced by three typhoons accounted for 60% of the efflux of CO_2 in the warm season. It is suggested that typhoons have a significant impact on the carbon cycle in the western subtropical North Pacific.

Keywords: Moored buoy; CO_2 flux; Typhoon; Entrainment; Upwelling; Sea-surface cooling.
Regional index terms: North Pacific; Subtropical region; East China Sea.

1. Introduction

Understanding the spatial and temporal variations of oceanic carbon dioxide (CO_2) is urgently important in order to more precisely estimate the future evolution of atmospheric CO_2 concentrations in response to a given industrial energy policy. However, compared with the well-known distribution of the partial pressure of CO_2 in the atmosphere (pCO_2^{air}), the distribution of pCO_2 in surface waters (pCO_2^{sea}) is poorly understood because pCO_2^{sea} data have traditionally been collected on board research vessels or ships of opportunity on a limited temporal and spatial scale. Although the climatological monthly distribution of pCO_2^{sea} in the global surface waters and subsequent global CO_2 fluxes have been estimated based on a compilation of shipboard ocean CO_2 data (e.g., Takahashi et al., 2002), the uncertainties in the global estimates are large, but can be reduced by using improved data sets. The interannual variability is not known. Continuous pCO_2^{sea} measurements in selected key areas over long periods would be beneficial for identifying the temporal characteristics representative of those areas. A pCO_2 measuring system that can be mounted on buoys is required. It should have sufficient stability and sensitivity to determine the temporal variability, and to collect continuous measurements over a period of several months to a year.

A few autonomous pCO_2 measurement systems have been developed that can be used for continuous measurements with a moored buoy (e.g., Friederich et al., 1995; DeGrandpre et al., 1995) or a drifting buoy (Merlivat and Brault, 1995). A high-resolution time series of pCO_2^{sea} revealed variations on many scales in the subtropical North Atlantic (Bates et al., 2000), the equatorial Atlantic (Bakker et al., 2001), the Mediterranean Sea (Hood and Merlivat, 2001; Copin-Montégut et al., 2004), the equatorial Pacific (Chavez et al., 1999), and the subtropical North Pacific (Friederich et al., 2002). These measurements suggest that it is possible to estimate the full annual air-sea CO_2 flux from monthly sampling, and to estimate

pCO_2^{sea} and the air-sea flux based on the relationship between pCO_2^{sea} and sea-surface temperature (SST) (Hood and Merlivat, 2001). Moreover, mooring-based measurements have also captured the variability missed between monthly ship visits: e.g., the detection of large weekly variations in CO_2 flux, driven by changes in wind speed, during a transition period from the El Niño to La Niña events (Chavez et al., 1999); the unusually high CO_2 efflux from the central California upwelling zone during the La Niña event (Friederich et al., 2002); and the onset of phytoplanktonic bloom induced by rapid stabilization of the surface layer (Copin-Montégut et al., 2004).

Hood et al. (2001) observed a sharp decrease in SST and increases in pCO_2^{sea} and nitrate concentration during a storm with wind speeds reaching 16 to 17 m s^{-1}, followed by a decrease in pCO_2^{sea} and nitrate concentration and a concomitant increase in fluorescence. The CO_2 flux during the storm doubled due to the elevated wind speed. These results suggest the entrainment of nutrients and the resultant biological production derived from short-term wind-induced mixing events. The effect of heavy storms, such as tropical cyclones, on the carbon cycle in the upper ocean is not well understood, compared with their effect on the upper thermal and physical structure. Bates et al. (1998a) indicated that hurricanes exert an important influence on ocean–atmosphere CO_2 exchange over subtropical oceans, based on shipboard observations made before and after the passage of hurricanes. Autonomous measurement platforms can be useful for monitoring surface properties related to the carbon cycle and for the understanding of the effects of tropical storms. Progress has been made recently using O_2 and N_2 measurements taken during hurricanes (D'Asaro and McNeil, 2007).

We developed a new automatic measuring system for pCO_2^{air} and pCO_2^{sea} that was mounted on a moored buoy operated by the Japan Meteorological Agency (JMA) for routine observations of maritime meteorology. In the present paper, we report the development of

this system and observations made in the East China Sea. In particular, the effects of three typhoons that passed near the buoy on the variations in pCO_2^{sea} are discussed.

2. Measurements and apparatus

The CO_2 measuring system was mounted on a 10-meter-diameter moored buoy in the East China Sea (28°10'N, 126°20'E; depth, 136m; Fig. 1) from June 29, 1997, through January 6, 1998. A CO_2 gas analyzer, standard gas bottles (48 liter), batteries, a controller, and recording and transmission systems were housed inside the buoy body. A non-dispersive infrared (NDIR) analyzer (LI-6262, LI-COR Inc.) was used as a CO_2 gas analyzer with no modification because of its good stability, tolerance to vibration, low power demand, and manageable size, as reported by Friederich et al. (1995). An air-sea equilibrator was installed in the equilibrator installing hole, penetrating the bottom of the buoy and becoming linked with the sea surface (Fig. 1). The lower compartment of the equilibrator was located below the mean waterline (Fig. 2) in order to ensure minimal deviation of the water temperature from the ambient temperature as well as a minimal power demand for the pumping up of seawater. The seawater intake port was covered with a copper mesh. In order for the system to operate without maintenance for a long period, as well as for rapid equilibration, we adapted a cascade equilibrator, in which a number of steps are provided to splash the seawater as it flows down. The seawater splash quickens equilibration between the seawater and the air circulating in a looped line consisting of the equilibrator and a buffer mounted outside of the buoy to compensate for the pulsating air flow (Fig. 3). The equilibration time response of the system was examined by comparison with ship measurements taken with a shower-head equilibrator on board R/V *Ryofu-Maru* of JMA during a cruise from the subarctic to equatorial region (48°N to 2°S along 165°E) that lasted for 39 days (October to November) in 1996. An insignificant difference (p = 0.18) between the ship and buoy systems for an

equilibration time of 30 minutes was observed in the pCO_2^{sea} measurements for the same water, pumped from the ship's bottom.

The CO_2 measuring system was powered by 77 add-water-type air batteries (Matsushita Battery Industrial Co.; 1.3 V, 2000 Ah). The maximum power supplied by the set of batteries was 12V at 5.2A. The batteries can provide sufficient energy for measurements to be made eight times per day for one year. Power management, switching circuit control, and data acquisition in the CO_2 measuring system were all accomplished by a CPU 50 controller (Kimoto Engineering Ltd.).

A series of CO_2 measurements in air, seawater and standard gasses were made every three hours. A sample of air was pumped from an air intake installed on the mast (7 m high) for meteorological measurements. Seawater was pumped up from the bottom of the buoy at a depth of about 1.0 m below the surface. All of this water flow was introduced into an air-sea equilibrator. The background air for atmospheric measurements or seawater-equilibrated air for seawater measurements was dried using a Perma Pure Dryer™ tube (Perma Pure, Ltd.) and was then introduced into an NDIR analyzer for measurements of the molar fraction of CO_2 in the sample air. All NDIR output voltages were measured under ambient pressure while stopping the air stream temporarily, averaged over 10 sec and stored on a memory card. These were calibrated every three hours using four CO_2-in-air working standard gases with nominal mixing ratios of 270, 330, 360, and 405 ppm. A quadratic function was used for fitting the NDIR output voltages to the certified concentrations. These gases underwent pre- and post-observation calibration against standards certified by the World Meteorological Organization (WMO). In this paper, we report CO_2 concentrations based on the 1995 WMO scale. The CO_2 mole fraction was converted to pCO_2 based on an equation from Weiss and Price (1980). The values of pCO_2^{air} and pCO_2^{sea} were normalized to a

sea-level pressure (SLP) of 1 atm in order to represent the variations in the carbonate system. Seawater temperatures, both at the bottom of the buoy and in the equilibrator, were recorded as well. Their difference was 0.03 ± 0.14 °C during the whole period and corrected for the temperature effect on pCO_2 using an equation from Weiss et al. (1982). The measurements with the temperature difference of larger than 0.5 °C were only 13 in 1525 measurements.

3. Results and discussion

3.1. Comparison with shipboard measurements

The CO_2 measurements were performed in the East China Sea from June 29, 1997, through January 6, 1998 (for 191 days). The buoy was located approximately 250 km northwest of Okinawa Island in about 136 m of water (28°10'N, 126°20'E; Fig. 1). The mooring site was located to the west of the main stream of the Kuroshio. The intercomparison of CO_2 measurements between the buoy and shipboard were made during July 15 to 17, 1997. The ship pCO_2 data were collected on board R/V *Ryofu-Maru* of JMA in the vicinity (<0.5 mile) of the buoy. The hourly shipboard data were generated with an NDIR analyzer (model 880, Beckman), coupled to a shower-head equilibrator in line with the seawater intake at 4 m depth, as reported earlier (Inoue and Sugimura, 1992; Midorikawa et al., 2006). During the comparison, no time lag was observed in the temporal variations of the two pCO_2 data sets. The offset of the buoy measurements from the ship measurements was 0.2 ± 1.0 μatm for pCO_2^{air} and 2.2 ± 1.6 μatm for pCO_2^{sea}. The standard deviation of the offset for pCO_2^{sea} was comparable to that for the pCO_2^{sea} measurements on board R/V *Ryofu-Maru* reported earlier by Inoue and Sugimura (1992), although possible sources of this offset may be the different surface properties of water at different depths or a different efficiency of equilibration due to the use of different types of equilibrators in the respective

measurements.

3.2. Comparison with pCO_2^{air} measurements on land

The pCO_2^{air} data were compared with those from continuous atmospheric measurements made at the Yonagunijima Weather Station (24.47ºN, 123.02ºE) by JMA (Watanabe et al., 2000) on Yonaguni Island, located approximately 500 km southwest of the buoy site. The offset between the buoy and land measurements of pCO_2^{air} for the overall study period was 0.6 ± 2.5 ppm for hourly data and 0.5 ± 1.6 ppm for the 24-hr moving average. The data also indicated no temporal change in the offset between the two pCO_2^{air} measurements over the whole period.

3.3. Seasonal variations

The pCO_2^{sea} in the surface water was highly variable on different time scales, ranging from daily to seasonal (Fig. 4). On a seasonal time scale, pCO_2^{sea} exhibited a large variation, with a maximum value of 408 μatm in late August and a minimum value of 308 μatm in early January. The pCO_2^{sea} was lower than pCO_2^{air} from June 29 through early July, indicating that this area was a sink for atmospheric CO_2 during this period. The pCO_2^{sea} increased with increasing water temperature and exceeded pCO_2^{air} in mid July. This area was primarily a source from mid July through mid September, when the water temperature exceeded 27.3°C. In late September, pCO_2^{sea} decreased with decreasing water temperature and fell below pCO_2^{air}, indicating that this area became a sink once again. The pCO_2^{sea}, normalized to a temperature of 25°C (n-$pCO_{2,\,T=25}$), was confined almost completely within a narrow range of 314 ± 6.7 μatm from early July through mid October except for typhoon events, indicating that the high pCO_2^{sea} in summer was due to the high temperature. Temporal changes in pCO_2^{sea} during this

period appear to be primarily attributable to variations in water temperature. From November through January, n-$pCO_{2,\ T=25}$ increased gradually. It has been suggested that dissolved inorganic carbon (DIC) supplied from the lower layer through enhanced vertical mixing would contribute to this increase in pCO_2^{sea}. However, because the effects of decreasing temperature on pCO_2^{sea} exceeded those of increasing DIC concentrations, pCO_2^{sea} could decrease during this period.

3.4. Diurnal variations

On July 29 to 31, August 23 to 25, and August 31 to September 2, a clear diurnal pCO_2^{sea} signal was observed, with the largest observed diurnal variation of 56 μatm, reaching a maximum at 15 to 18 o'clock and a minimum at 6 o'clock. During these days, the weather was fine and wind speeds were very low (< 3 m s^{-1}; mostly < 1 m s^{-1} around the maximum pCO_2^{sea}). Surface stratification developed, and the prominent surface warming and cooling patterns that are characteristic of the diurnal thermal cycle due to the intense solar heat flux were observed. The times of maximum and minimum diurnal changes in water temperature coincided with those for pCO_2^{sea}, whereas the n-$pCO_{2,\ T=25}$ showed little diurnal variation during these days. A linear regression of pCO_2^{sea} against water temperature for two to four consecutive days gave a relationship of $d(\ln pCO_2)/dT = 4.11 \pm 0.27$ to 4.38 ± 0.39 % °C^{-1}, which coincides well with the relationship of 4.23 % °C^{-1} from Takahashi et al. (1993), although the relationship in the buoy observations was more dispersive due to superimposed noise. These results indicate that diurnal changes in pCO_2^{sea} occurred in response to the diurnal thermal cycle. The observed pCO_2^{sea} cycle can be explained in terms of the temporal evolution of the warm surface layer. However, the CO_2 flux during this period was small due to the very weak wind, as described below.

3.5. Effects of typhoons on pCO_2^{sea} variations

The buoy data revealed significant variations in pCO_2^{sea} on a time scale of several days to a week. The most pronounced temporal changes in pCO_2^{sea} were associated with the passage of typhoons. Three typhoons passed close to the buoy in August and September, 1997 (Fig. 5). The first typhoon, Typhoon Tina (T9711), passed directly over the buoy site on August 7 to 8. The second one, Typhoon Winnie (T9713), passed 300 km southwest (on the left side) of the buoy, and the third, Typhoon Oliwa (T9719), passed 300 km east (on the right side) of the buoy. During the passage of T9711, T9713, and T9719, respective wind speed maxima of 29.5, 30.0 and 20.6 m s^{-1} (Figs. 4 and 6 to 8) and wave-height maxima of 10.9, 11.1, and 8.6 m were observed. During these periods, CO_2 observations were conducted appropriately without any break, demonstrating the high performance of the new pCO_2 measurement system under severe conditions.

The three typhoons had different influences on the surface distributions of temperature and pCO_2^{sea} at the buoy site as follows. In the case of T9713, the temperatures at depths of 1 m, 50 m, and 100 m approached each other (Fig. 7c), indicating that the mixed layer at the buoy site had deepened due to strong vertical turbulent mixing, since the relative position of the buoy from the center of the moving typhoon was on the right side of its moving direction (Wada, 2005). In the case of T9711, a converging between the temperatures at 1 m and 50 m was observed before the time of minimum SLP (Fig. 6). This was also due to vertical turbulent mixing caused by strong wind. After the typhoon center had passed, however, temperatures decreased concurrently at all three depths (1 m, –1.5°C; 50 m, –6.3°C; 100 m, –4.2°C), which cannot be explained by enhanced surface mixing alone. The salient decreases

in temperatures at depths of 50 m and 100m suggest that cool water was transported from the lower layer by an upwelling event. In fact, the cyclonic wind of the typhoon produced a divergent current in the upper ocean and, subsequently, the mixed layer in the vicinity of typhoon center tended to become shallow by Ekman pumping since the shear-induced vertical turbulent mixing became negligibly small (Wada et al., 2008). Then, a cyclonic eddy occurred behind the typhoon, inducing upwelling (e.g., Wada, 2002). Sea-surface cooling was relatively small because the mixed layer was so thick that sufficient cool water did not reach the surface. Nonetheless, it is worth noting that the upwelling event played an important role in the ocean response to T9711, which is different from T9713. In T9719, which was relatively weak and passed on the right side of the buoy site, only small changes in temperature at 1 m and 50 m were observed (Fig. 8c). Since the typhoon center was far from the buoy and since T9719 was smaller than T9713, only small changes were caused by vertical turbulent mixing with no effect from near-inertial currents or anticyclonic eddy (Wada and Usui, 2007).

In both T9711 and T9713, changes in pCO_2^{sea} were small before the minimum SLP, and just after the closest approach of the typhoon, pCO_2^{sea} decreased rapidly to the same level as pCO_2^{air} within 9 hr (Figs. 6 and 7). pCO_2^{sea} normalized to a temperature of 29°C (n-$pCO_{2,T=29}$) increased from about the time when the wind speed increased to over 15 m s^{-1} until about the time when the wind speed fell below 20 m s^{-1}, synchronized approximately with the decrease in SST, indicating a DIC supply due to vertical turbulent mixing corresponding to entrainment at the mixed-layer base. Then, n-$pCO_{2,T=29}$ decreased gradually from about the time when the wind speed fell below 15 m s^{-1}. n-$pCO_{2,T=29}$ continued to increase for a longer time because of the large size of T9713, whereas the n-$pCO_{2,T=29}$ increase in T9711 was more rapid and its magnitude was larger under the conditions of the upwelling event. It is

considered that pCO_2^{sea} remained almost constant because the effects of DIC entrainment on pCO_2^{sea} were counteracted by those of sea surface cooling and CO_2 efflux to air during the period of predominance of vertical turbulent mixing during the first half of each typhoon passage. During the period of rapid pCO_2^{sea} decrease, n-$pCO_{2,\,T=29}$ exhibited insignificant change, indicating a dominant contribution of decreasing SST to the pCO_2^{sea} decrease during this period. After pCO_2^{sea} fell to the same level as pCO_2^{air}, subsequent gradual decreases in n-$pCO_{2,\,T=29}$ in both typhoons suggest a possible occurrence of biological DIC consumption, since the contribution of air-sea CO_2 flux was estimated to be almost zero.

In T9719, pCO_2^{sea} increased from the same level as pCO_2^{air} to a higher one before the minimum SLP (Figs. 8e and f). n-$pCO_{2,\,T=29}$ also exhibited a small increase during the passage of the typhoon. The pCO_2^{sea}, which was in equilibration with the air before the passage, could have been elevated by a supply of DIC from the lower column resulting from vertical turbulent mixing, which would exceed the contribution of a small SST decrease. A distinct pCO_2^{sea} decrease corresponding to the SST drop just after the closest approach of the typhoon was not observed. The effects of T9719 on the variations of pCO_2^{sea} and SST were relatively small due to weak vertical turbulent mixing, since this typhoon passed on the right side of the buoy.

In our observations, n-$pCO_{2,\,T=29}$ increased in all three cases (T9711, +34; T9713, +20; T9719, +15 μatm), indicating the increases in DIC concentration due to enhanced vertical turbulent mixing. In addition, an upwelling event could enhance the increases in DIC concentration in T9711, in combination with vertical turbulent mixing. These features are different from those reported for tropical cyclones in the Sargasso Sea, where temperature was the dominant control on pCO_2^{sea} variability and no DIC change was observed (Bates et al., 1998b). It is considered that the intrusion of DIC-rich subsurface Kuroshio waters along the

continental shelf floor associated with the typhoon passage (Chen et al., 2003) could have a significant influence on the surface carbonate system in the East China Sea, as compared with the thick DIC-poor surface waters in the subtropical North Atlantic (Brix et al., 2004).

3.6. Variations in air-sea CO_2 fluxes

The air-sea fluxes of CO_2 (F) were calculated using the gas-transfer coefficient ($E(W)$) from Wanninkhof (1992) for the short term, based on the difference (ΔpCO_2) between pCO_2^{sea} and pCO_2^{air} and the wind speed, observed every three hours on the buoy, as follows:

$$F = E(W) \cdot (pCO_2^{sea} - pCO_2^{air}) = E(W) \cdot \Delta pCO_2 . \qquad (1)$$

The three-hourly fluxes ranged from -2.8 to 0.8 mmol C m^{-2} per 3 hr (Fig. 4g) except for higher fluxes (max. 4.9 mmol C m^{-2} per 3 hr in T9711) associated with typhoon winds. The fluxes were negative during the initial two weeks and after late September, indicating absorption of CO_2 into the ocean during these periods, whereas they were positive during mid July through mid September, indicating evolution from the ocean. This area took up 296 mmol m^{-2} of CO_2 from the atmosphere as the net flux for the overall observation period of 191 days. The area acted totally as a sink during the period.

Little flux was estimated for days when a high pCO_2^{sea} was observed, corresponding to a diurnal thermal cycle caused by low wind speeds. In contrast, three typhoons had a significant impact on the CO_2 flux in this area. It is suggested that strong winds and a DIC supply from the lower column that occurs during the passage of a typhoon increased the efflux CO_2 from ocean to atmosphere, despite the decreases in pCO_2^{sea} due to sea-surface cooling. The fluxes associated with three typhoons were estimated to be 27 mmol C m^{-2} for T9711, 37 mmol C m^{-2} for T9713 and 26 mmol C m^{-2} for T9719. The greatest flux was estimated for

the strong and large T9713, but not for T9711, which passed directly over the mooring site with the lowest SLP and highest n-$pCO_{2,\ T=29}$.

On the basis of Eq. 1, we examined how the variations in the gas-transfer coefficient, pCO_2^{sea}, and pCO_2^{air} affected the CO_2 flux during each typhoon event. The differential of the CO_2 flux, F, with respect to time can be written as

$$\frac{\partial F}{\partial t} = \frac{\partial E(W)}{\partial t} \cdot \Delta pCO_2 + \frac{\partial pCO_2^{sea}}{\partial t} \cdot E(W) - \frac{\partial pCO_2^{air}}{\partial t} \cdot E(W), \qquad (2)$$

where the first term of the right side of Eq. 2 represents the changes in CO_2 flux by those in the gas-transfer coefficient, the second term by those in pCO_2^{sea} and the third term by those in pCO_2^{air}. These three terms were approximated by the central difference. The calculated values for the respective terms and their sum are shown in Fig. 9. For both T9711 and T9713, the increase in CO_2 efflux before the minimum SLP was mainly caused by the increase in wind speed, and the rapid decrease in efflux after the minimum SLP by the decrease in pCO_2^{sea}. During the passage of T9719, pCO_2^{sea} was a major factor controlling the CO_2 flux, though the maximum wind speed reached to the level of 20 m s^{-1}. As can be easily seen, pCO_2^{air} had only a minor effect on the variations in flux for all typhoon events.

In T9711 and T9713, pCO_2^{sea} was not the main driver for the temporal changes in CO_2 flux before the minimum SLP, but it is noteworthy that pCO_2^{sea} contributed to the enhancement of the efflux through holding ΔpCO_2 positive. Small variations in pCO_2^{sea} before the minimum SLP were due to the balance between anti-correlated SST and DIC variations; the decrease in pCO_2^{sea} due to cooling and the CO_2 efflux to air were compensated for by the supply of DIC from the lower layer, as mentioned in Section 3.5, leading to a persistently positive ΔpCO_2 and consequent enhancement of the efflux. The retention time of a positive ΔpCO_2 with a significant CO_2 efflux (more than 0.3 mmol C m^{-2} per 3 hr) was 36 hr in T9711, 66 hr in T9713 and 54 hr in T9719. In T9713 and T9719, which passed over an area away

from the mooring site, sustained vertical turbulent mixing continued to supply DIC from the lower layer for a longer time and enhanced the efflux, irrespective of a relatively small n-$pCO_{2,T=29}$ increase, compared with those in T9711. In the intense T9711 and T9713, just after the closest approach of the typhoon, pCO_2^{sea} decreased to the same level as pCO_2^{air} with persistently high levels of n-$pCO_{2,T=29}$ (Figs. 6 and 7), leading to the discontinuance of efflux CO_2. The discontinuance of efflux CO_2 was not triggered by the decrease in DIC concentration due to CO_2 evolution to the air but rather by the decrease in pCO_2^{sea} due to the SST drop. The impact of precipitation on the SST drop is unclear, but it is likely that the precipitation also contributed to sea-surface cooling and the consequent discontinuance of CO_2 evolution.

In conclusion, the efflux of CO_2 in the warm season was enhanced by the passage of typhoons. In the present study, the total flux (90 mmol C m^{-2}) for three typhoons accounted for 60% of the efflux of CO_2 from the ocean during the period from mid July through mid September, when this area acted as a source for atmospheric CO_2. This ratio is higher than that in the Sargasso Sea (44%; Bates et al., 1998a), based on shipboard observations before and after the passage of hurricanes. At the same time, the three typhoons decreased the net flux of CO_2 into the ocean by 30% during the observation period.

3.7. Contribution of typhoons in the western subtropical North Pacific

Based on best-track data for 1961 to 2004 taken from the Regional Specialized Meteorological Center (RSMC) Tokyo – Typhoon Center (http://www.jma.go.jp/jma/jma-eng/jma-center/rsmc-hp-pub-eg/RSMC_HP.htm), the frequency of typhoons was investigated for each 5° x 5° box in the western subtropical North Pacific (Table 1). The size of the boxes was determined from the typical range of sea-surface

cooling by the passage of typhoons, which expands to several hundred kilometers (Wada et al., 2008). An average of 3.6 typhoons per year passed through the box centered in the vicinity of the buoy site, which was slightly higher than three typhoons observed around the buoy. The averages of 37.9 m s^{-1} for maximum wind speed and 3.6 days per year for duration were higher and longer than those observed on the buoy, respectively. Elsewhere, the average number of typhoons was 24.8 in the region of 10 to 30°N, 120 to 160°E in a year. The average duration of 3.8 days per year for each box of 5° x 5° was comparable, while the average of 30.9 m s^{-1} for maximum wind speed was relatively low, compared with that around the buoy site. The higher wind speed around the buoy site was attributable to the frequent passage of intense typhoons, which developed up to the mature stage (Wada and Usui, 2007).

Based on the climatological flux by Takahashi et al. (2002), the efflux of CO_2 from the ocean in the warm season around the buoy site (249 mmol C m^{-2}) is higher than that averaged in the western subtropical North Pacific (132 – 176 mmol C m^{-2} for 10 to 30°N, 120 to 160°E; Table 1), corresponding to relatively higher ΔpCO_2 and wind speed around the buoy site. Considering the differences in wind speed and duration between the buoy site and the western subtropical North Pacific, the contribution of typhoons to the air-sea CO_2 flux in the western subtropical North Pacific was estimated (Table 1) and compared with the climatological flux from Takahashi et al. (2002). The CO_2 efflux (121 mmol C m^{-2}) enhanced by typhoons accounted for 69 – 92% (average, 76%) of the summer efflux in the western subtropical North Pacific. These estimates are higher than the contribution (20 – 54%) of tropical-cyclone-mediated CO_2 efflux (67 – 179 mmol C m^{-2}, calculated based on estimates by Bates (2002)) to the CO_2 flux (329 mmol C m^{-2} calculated from climatology by Takahashi et al. (2002)) estimated for all ocean basins of 40 to 10°N and 10 to 40°S. This may be because the effect of vertical mixing of DIC into the mixed layer during tropical cyclone events was not considered in the estimation by Bates (2002) and/or most of the CO_2 efflux due to tropical

cyclones occurred in the Pacific Ocean basin (Bates, 2002). In any case, these results indicate that the upper ocean physics associated with typhoon passage has a significant influence on the carbon cycle in the upper ocean. Future studies, coupled with precise measurements of DIC changes, will be required to understand its detailed mechanism.

4. Conclusions

It is difficult to directly monitor the parameters essential for estimating CO_2 flux through a severe storm by observations made on any platform other than the buoy. In the present study, the data on pCO_2^{sea} and pCO_2^{air} along with maritime meteorological parameters for 191 days were acquired by an automatic measuring system mounted on the buoy moored in the East China Sea, without any maintenance. During the observation period, three typhoons passed by the moored buoy. The data for all parameters including pCO_2 were collected without any break under severe conditions during the passage of the typhoons. The variations in surface properties were different through the different processes, depending on where the typhoon passed through. The magnitudes of the fluxes during the passage of typhoons were determined by the wind speed, the amount and persistency of the DIC supply, and the duration of positive ΔpCO_2. It is noted that during the passage of the intense typhoon, the main driver for the variations of the CO_2 flux changed from wind speed to pCO_2^{sea} before and after the minimum SLP. The DIC entrainment due to vertical turbulent mixing contributed to the enhancement of the efflux by holding ΔpCO_2 positive. In intense typhoons, a mechanism was found whereby a discontinuation of efflux CO_2 was triggered by the decrease in pCO_2^{sea} due to sea-surface cooling just after the closest approach of the typhoon to the buoy site, irrespective of high DIC levels. It is necessary to clarify these working processes in detail in future studies for a better understanding of the air-sea CO_2 gas exchange enhanced during an intense

storm.

In the present study, the efflux enhanced by the three typhoons increased the efflux of CO_2 from the ocean during summer to autumn by 150% and reduced the absorption of atmospheric CO_2 during the study period by 30%. Typhoons that passed at some distance from the mooring site also had a significant impact on the enhancement of air-sea CO_2 flux through long-lasting vertical turbulent mixing in the upper ocean, indicating that their influence could extend over a wide range. It is suggested that the contribution of typhoons to the carbon cycle in the western subtropical North Pacific is significant. Recent studies suggest that tropical cyclones will be stronger in future warm oceans (e.g., Oouchi et al., 2006). The intensification of tropical cyclones could contribute to an acceleration in the reduction of ocean uptake of CO_2, consequently exerting positive feedback and increasing global warming.

Acknowledgments

The authors are grateful to the staff of the Marine Division, Climate and Marine Department, JMA, for their support of this work and to the captain and crew of the of R/V Ryofu Maru for their kind cooperation in the intercomparison of CO_2 measurements between the buoy and shipboard during the cruise of RF97-05. We also thank S. Roy, N. Metzl, and two anonymous reviewers for their helpful comments. Finally, we acknowledge the staff of the Geochemical Research Department of the Meteorological Research Institute for their support of this work. The present study was made within the framework of the project for development of an advanced buoy system for GOOS (Global Ocean Observing System), financed by Special Coordination Funds for Promoting Science and Technology from the Ministry of Education, Culture, Sports, Science and Technology of Japan. This research was

supported in part by a Grant-in-Aid for Scientific Research, “Western Pacific Sea-air Interaction Study (W-PASS),” of the Ministry of Education, Culture, Sports, Science, and Technology of Japan (#19030001). A. Wada was supported by funds from the cooperative program (No. 107 in FY2007) of the Ocean Research Institute at the University of Tokyo.

References

Bakker, D.C.E., Etcheto, J., Boutin, J., Merlivat, L., 2001. Variability of surface water fCO_2 during seasonal upwelling in the equatorial Atlantic Ocean as observed by a drifting buoy. Journal of Geophysical Research, 106 (C5), 9241-9253.

Bates, N.R., Knap, A.H., Michaels, A.F., 1998a. Contribution of hurricanes to local and global estimates of air-sea exchange of CO_2. Nature, 395, 58-61.

Bates, N.R., Takahashi, T., Chipman, D.W., Knap, A.H., 1998b. Variability of pCO_2 on diel to seasonal timescales in the Sargasso Sea near Bermuda. Journal of Geophysical Research, 103 (C8), 15,567-15,585.

Bates, N.R., Merlivat, L., Beaumont, L., Pequignet, A.C., 2000. Intercomparison of shipboard and moored CARIOCA buoy seawater fCO_2 measurements in the Sargasso Sea. Marine Chemistry, 72, 239-255.

Bates, N.R., 2002. Interannual variability in the global uptake of CO_2. Geophysical Research Letters, 29, 1059, doi:10.1029/2001GL013571.

Brix, H., Gruber, N., Keeling, C.D., 2004. Interannual variability of the upper ocean carbon cycle at station ALOHA near Hawaii. Global Biogeochemical Cycles, 18, GB4019, doi:10.1029/2004GB002245.

Chen, C.-T.A., Liu, C.-T, Chuang, W.S., Yang, Y.J., Shiah, F.-K., Tang, T.Y., Chung, S.W., 2003. Enhanced buoyancy and hence upwelling of subsurface Kuroshio waters after a typhoon in the southern East China Sea. Journal of Marine Systems, 42, 65-79.

Copin-Montégut, C., Bégovic, M., Merlivat, L., 2004. Variability of the partial pressure of CO_2 on diel to annual time scales in the Northwestern Mediterranean Sea. Marine Chemistry, 85, 169-189.

Chavez, F.P., Strutton, P.G., Friederich, G.E., Feely, R.A., Feldman, G.C., Foley, D.G.,

McPhaden, M.J., 1999. Biological and chemical response of the equatorial Pacific Ocean to the 1997–98 El Niño. Science, 286, 2126–2131.

D'Asaro, E., McNeil, C., 2007. Air-sea gas exchange at extreme wind speeds measured by autonomous oceanographic floats. Journal of Marine Systems, 66, 92-109.

DeGrandpre, M.D., Hammar, T.R., Smith, S.P., Sayles, F.L., 1995. In situ measurements of seawater pCO_2. Limnology and Oceanography, 40, 969-975.

Friederich, G..E., Brewer, P.G., Herlien, R., Chavez, F.P., 1995. Measurement of sea surface partial pressure of CO_2 from a moored buoy. Deep-Sea Research I, 42, 1175-1186.

Friederich, G.E., Walz, P.M., Burczynski, M.G., Chavez, F.P., 2002. Inorganic carbon in the central California upwelling system during the 1997-1999 El Niño-La Niña event. Progress in Oceanography, 54, 185-203.

Hood, E.M., Merlivat, L., 2001. Annual to interannual variations of fCO_2 in the northwestern Mediterranean Sea: Results from hourly measurements made by CARIOCA buoys, 1995-1997. Journal of Marine Research, 59, 113-131.

Hood, E.M., Wanninkhof, R., Merlivat, L., 2001. Short timescale variations of fCO_2 in a North Atlantic warm-core eddy: Results from the Gas-Ex 98 carbon interface ocean atmosphere (CARIOCA) buoy data. Journal of Geophysical Research, 106 (C2), 2561-2572.

Inoue, H., Sugimura, Y., 1992. Variations and distribution of CO_2 in and over the equatorial Pacific during the period from the 1986/88 El Niño to the 1988/89 La Niña event. Tellus, 44B, 1-22.

Merlivat, L., Brault, P., 1995. CARIOCA buoy: Carbon dioxide monitor. Sea Technology, 10, 23–30.

Midorikawa, T., Ishii, M., Nemoto, K., Kamiya, H., Nakadate, A., Masuda, S., Matsueda, H., Nakano, T., Inoue, H.Y., 2006. Interannual variability of winter oceanic CO_2 and

air-sea CO_2 flux in the western North Pacific for 2 decades. Journal of Geophysical Research, 111, C07S02, doi:10.1029/2005JC003095.

Oouchi, K., Yoshimura, J., Yoshimura, H., Mizuta, R., Kusunoki, S., Noda, A., 2006. Tropical cyclone climatology in a global-warming climate as simulated in a 20 km-mesh global atmospheric model: Frequency and wind intensity analyses. Journal of the Meteorological Society Japan, 84, 259-276.

Takahashi, T., Olafsson, J., Goddard, J., Chipman, D.W., Sutherland, S.C., 1993. Seasonal variation of CO_2 and nutrients in the high-latitude surface oceans: a comparative study. Global Biogeochemical Cycles, 7, 843–878.

Takahashi, T., Sutherland, S. C., Sweeney, C., Poisson, A., Metzl, N., Tillbrook, B., Bates, N., Wanninkhof, R., Feely, R. A., Sabine, C., Olafsson, J., Nojiri, Y., 2002. Global sea-air CO_2 flux based on climatological surface ocean pCO_2, and seasonal biological and temperature effects. Deep-Sea Research II, 49, 1601-1622.

Wada, A., 2002. The processes of SST cooling by typhoon passage and case study of Typhoon Rex with a mixed layer ocean model. Papers in Meteorology and Geophysics, 52, 31–66.

Wada, A., 2005. Numerical simulations of sea surface cooling by a mixed layer model during the passage of Typhoon Rex. Journal of Oceanography, 61, 41-57.

Wada, A., Usui, N., 2007. Importance of tropical cyclone heat potential for tropical cyclone intensity and intensification in the western North Pacific. Journal of Oceanography, 63, 427-447.

Wada, A., Niino, H., Nakano, H., 2008. Roles of vertical turbulent mixing in the ocean response to Typhoon Rex (1998). Journal of Oceanography, submitted.

Wanninkhof, R., 1992. Relationship between wind speed and gas exchange over the ocean. Journal of Geophysical Research, 97 (C5), 7373-7382.

Watanabe, F., Uchino, O., Joo, Y., Aono, M., Higashijima, K., Hirano, Y., Tsuboi, K., Suda, K., 2000. Interannual variation of growth rate of atmospheric carbon dioxide concentration at the JMA's three monitoring stations: large increase in concentration of atmospheric carbon dioxide. Journal of the Meteorological Society Japan, 78, 673–682.

Weiss, R.F., Price, B.A., 1980. Nitrous oxide solubility in water and seawater. Marine Chemistry, 8, 347-359.

Weiss, R.F., Jahnke, R.A., Keeling, C.D., 1982. Seasonal effects of temperature and salinity on the partial pressure of CO_2 in seawater. Nature, 300, 511-513.

Figure captions

Fig. 1. Location of the JMA moored buoy in the East China Sea (28°10'N, 126°20'E ; depth, 136 m) and configuration of CO_2 measurement system mounted on the buoy.

Fig. 2. Structure of seawater intake and air-sea equilibrator of the cascade type, installed inside the sensor hole on the JMA buoy. The overall height of the cylinder is 1.7 m. The lower half (1.0 m) of the cylinder was set below the sea surface.

Fig. 3. Schematic diagram of the gas flow line.

Fig. 4. Time series of surface properties observed at the JMA buoy in the East China Sea from June 29, 1997 to January 6, 1998.

(a) Sea-level pressure, (b) wind speed (at 7.5 m), (c) water temperature at depths of 1, 50 and 100 m, (d) pCO_2^{air} and pCO_2^{sea}, (e) n-$pCO_{2,\,T=25}$, (f) ΔpCO_2, and (g) CO_2 flux. The pCO_2 values were expressed as normalized to an SLP of 1 atm. The normalization of pCO_2^{sea} to a temperature of 29°C was performed using the equation by Weiss et al. (1982). The CO_2 flux values covered three hours and were calculated by using the gas exchange-wind relationships for a short term from Wanninkhof (1992) and wind-speed data observed every three hours on the same buoy. Positive values for CO_2 flux indicate efflux of CO_2 from the ocean and negative values indicate influx into the ocean.

Fig. 5. Storm tracks of typhoons T9711 and T9713 in August and T9719 in September, 1997.

Fig. 6. Time series of surface properties during the passage of typhoon T9711. (a) Sea-level pressure, (b) wind speed (at 7.5 m), (c) water temperature at depths of 1, 50 and 100 m, (d) SST (1 m), (e) pCO_2^{air}, pCO_2^{sea} and n-$pCO_{2,\,T=29}$, (f) ΔpCO_2, and (g) CO_2 flux.

Fig. 7. As Fig. 6, but for typhoon T9713.

Fig. 8. As Fig. 6, but for typhoon T9719.

Fig. 9. Contributions of wind speed (blue circle), pCO_2^{sea} (red square) and pCO_2^{air} (green triangle) to the CO_2 flux (gray bold line) during the typhoon events. (a) T9711, (b) T9713, and (c) T9719. The contribution of each parameter was calculated based on the corresponding term in the right side of Eq. 2; $\frac{\partial E(W)}{\partial t} \cdot \Delta pCO_2$ for wind speed, $\frac{\partial pCO_2^{sea}}{\partial t} \cdot E(W)$ for pCO_2^{sea} and $-\frac{\partial pCO_2^{air}}{\partial t} \cdot E(W)$ for pCO_2^{air}. The sum of contributions of three parameters is equal to the flux, $\frac{\partial F}{\partial t}$. Arrows show the time of the minimum SLP. The correlation of each parameter with the CO_2 flux is as follows: $r^2 = 0.90$ ($p < 10^{-7}$) in T9711, $r^2 = 0.84$ ($p < 10^{-4}$) in T9713, and $r^2 = 0.18$ ($p = 0.08$) in T9719 for wind speed before the minimum SLP; $r^2 = 0.89$ ($p < 10^{-4}$) in T9711, $r^2 = 0.74$ ($p = 0.001$) in T9713, and $r^2 = 0.49$ ($p = 0.004$) in T9719 for pCO_2^{sea} after the minimum SLP; $r^2 = 0.45$ ($p = 0.003$) for pCO_2^{sea} and $r^2 = 0.14$ ($p > 0.1$) for wind speed in T9719 over the entire period (2 days) of typhoon passage.

Table 1

Statistics of typhoons compiled around the buoy site and in the western subtropical North Pacific

Location	Buoy site		Western subtropical North Pacific (10-30°N, 120-160°E) [b]
Period	1997 (This study)	Average[a] for 1961-2004	Average for 1961-2004
Number (per year)	3	3.6	0.78 [c]
Duration (days per year)	2.8	3.6	3.8
Maximum wind speed ($m\ s^{-1}$)	31.1	37.9	30.9
Summer efflux ($mmol\ C\ m^{-2}$)	150	249 [d]	132 – 176 [d]
Efflux by typhoons ($mmol\ C\ m^{-2}$)	90	173 [e]	121 [e]
Contribution of typhoons to summer efflux (%)	60	69	69 – 92

[a] Values compiled in a box of 5° x 5° around the buoy site (28°10'N, 126°20'E) were annually averaged for 1961-2004.

[b] Values compiled in the region of 10 to 30°N, 120 to 160°E were annually averaged for 1961-2004. Values are expressed as those per year for a box of 5° x 5° and can directly be compared with those for the buoy site.

[c] 24.8 typhoons per year passed through the region of 10 to 30°N, 120 to 160°E were divided among 32 boxes of 5° x 5°.

[d] Positive values of CO_2 flux were taken from the climatology by Takahashi et al. (2002) and were summed up for the source season in each 4° x 5°. For the region of 10 to 30°N, 120 to 160°E, efflux values summed up in the respective 4° x 5° boxes were latitudinally averaged in the range of 120 to 160°E. The standard deviation of efflux value in 10 to 30°N ranged in 63 to 112 $mmol\ C\ m^{-2}$.

[e] Calculated from the efflux value by typhoons estimated in this study, based on the differences in maximum wind speed and duration between observation and statistical average. With regard to wind speed, the value was converted using the $E(W)$ equation from Wanninkhof (1992).

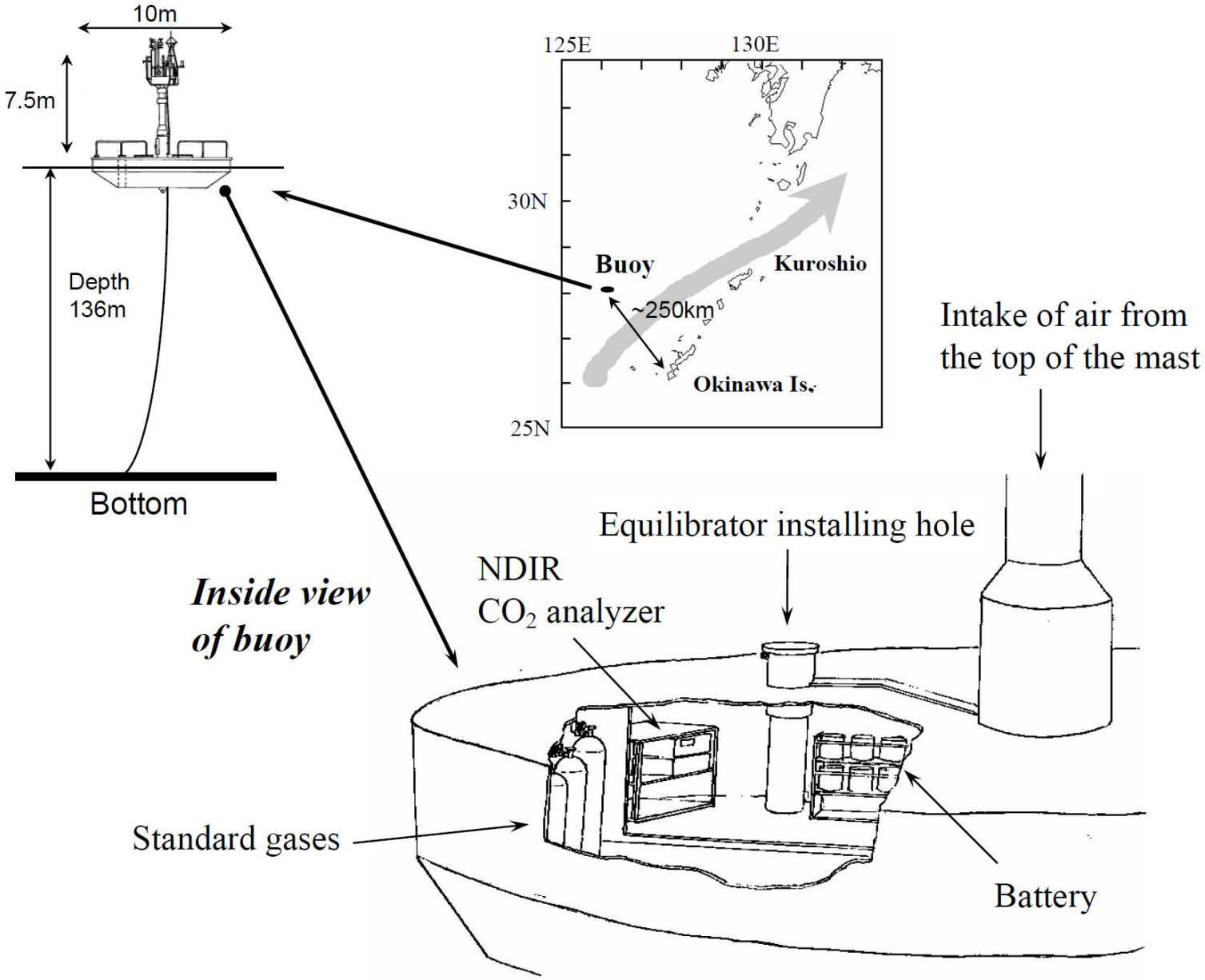

Nemoto et al. Fig. 1

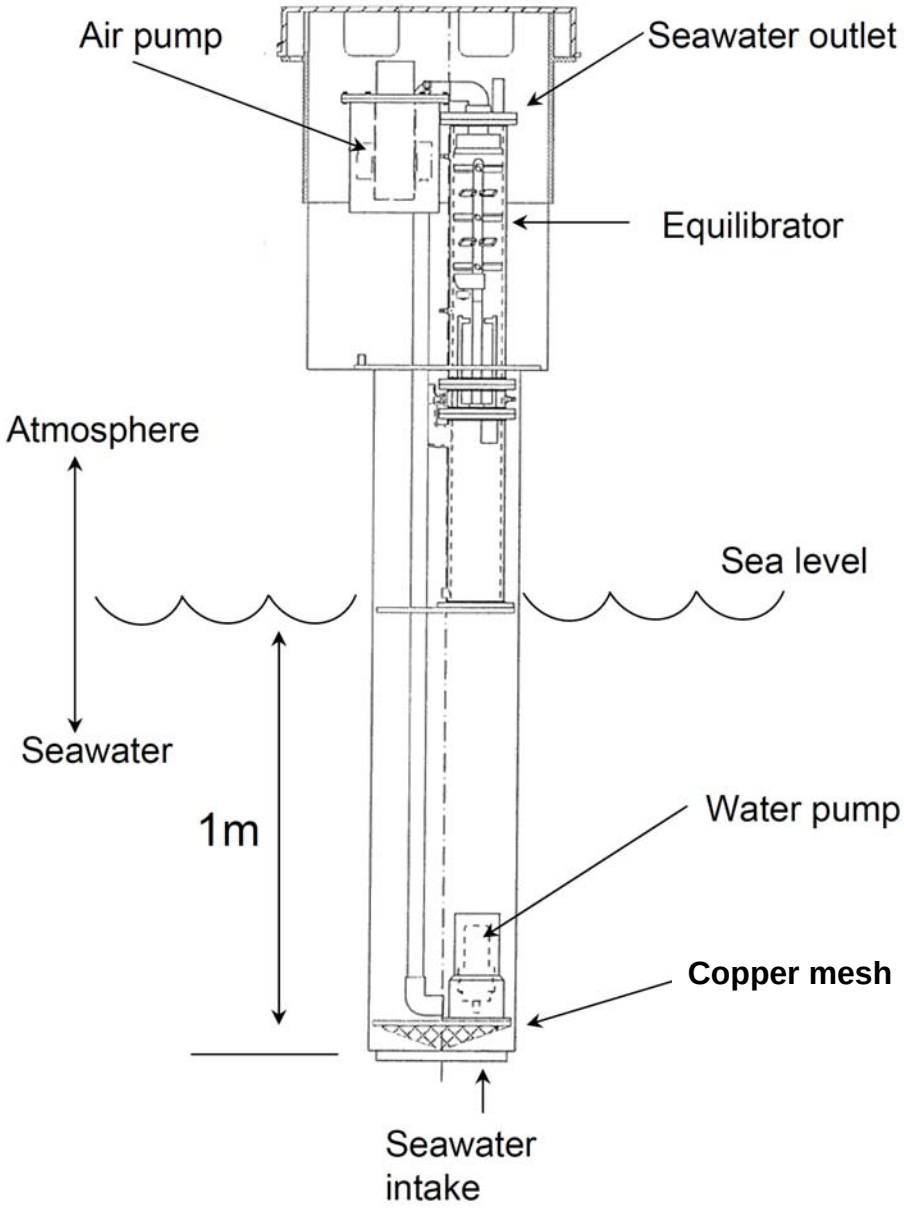
Air pump
Seawater outlet
Equilibrator
Atmosphere
Sea level
Seawater
1m
Water pump
Copper mesh
Seawater
intake

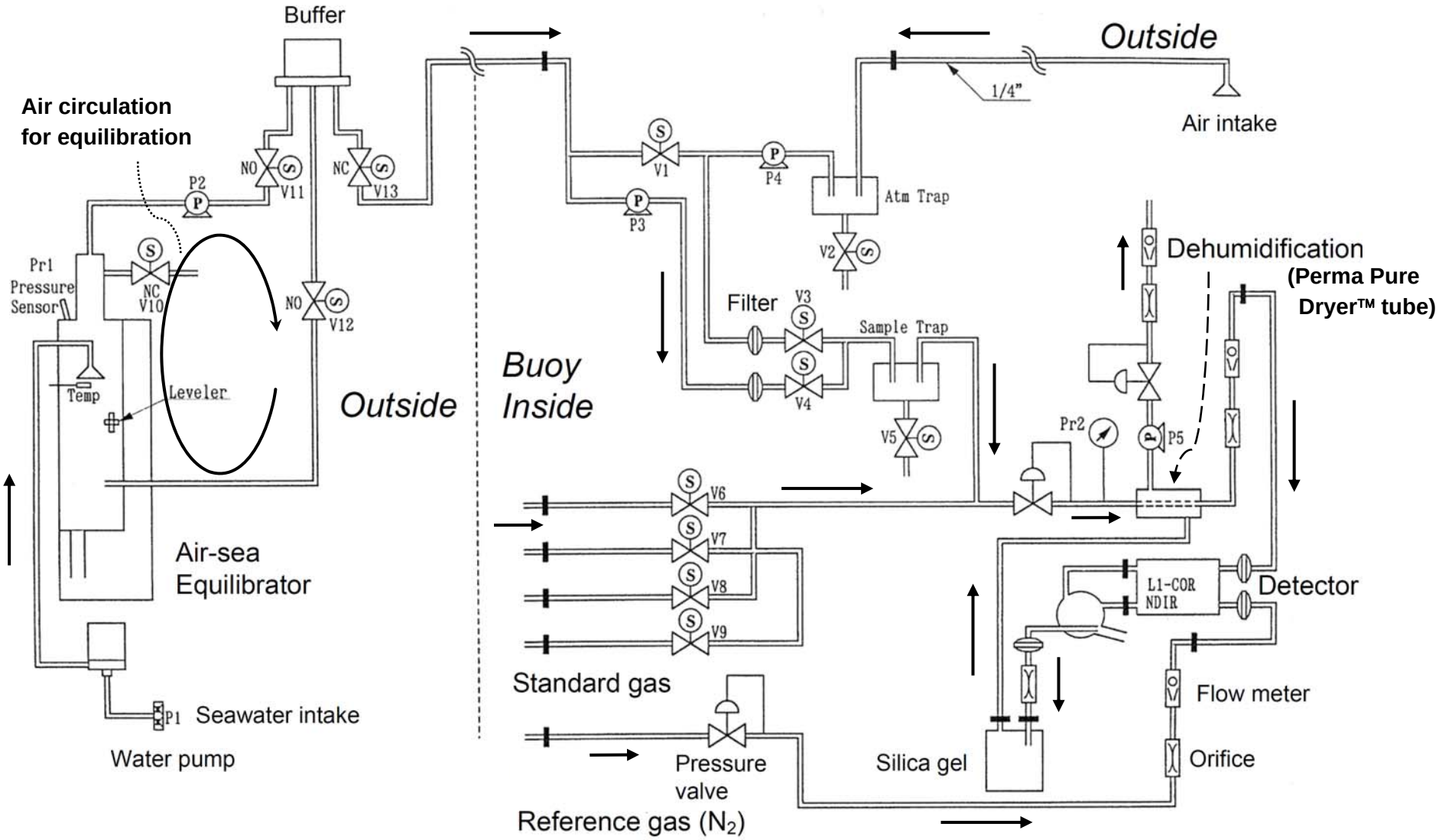

Nemoto et al. Fig. 3

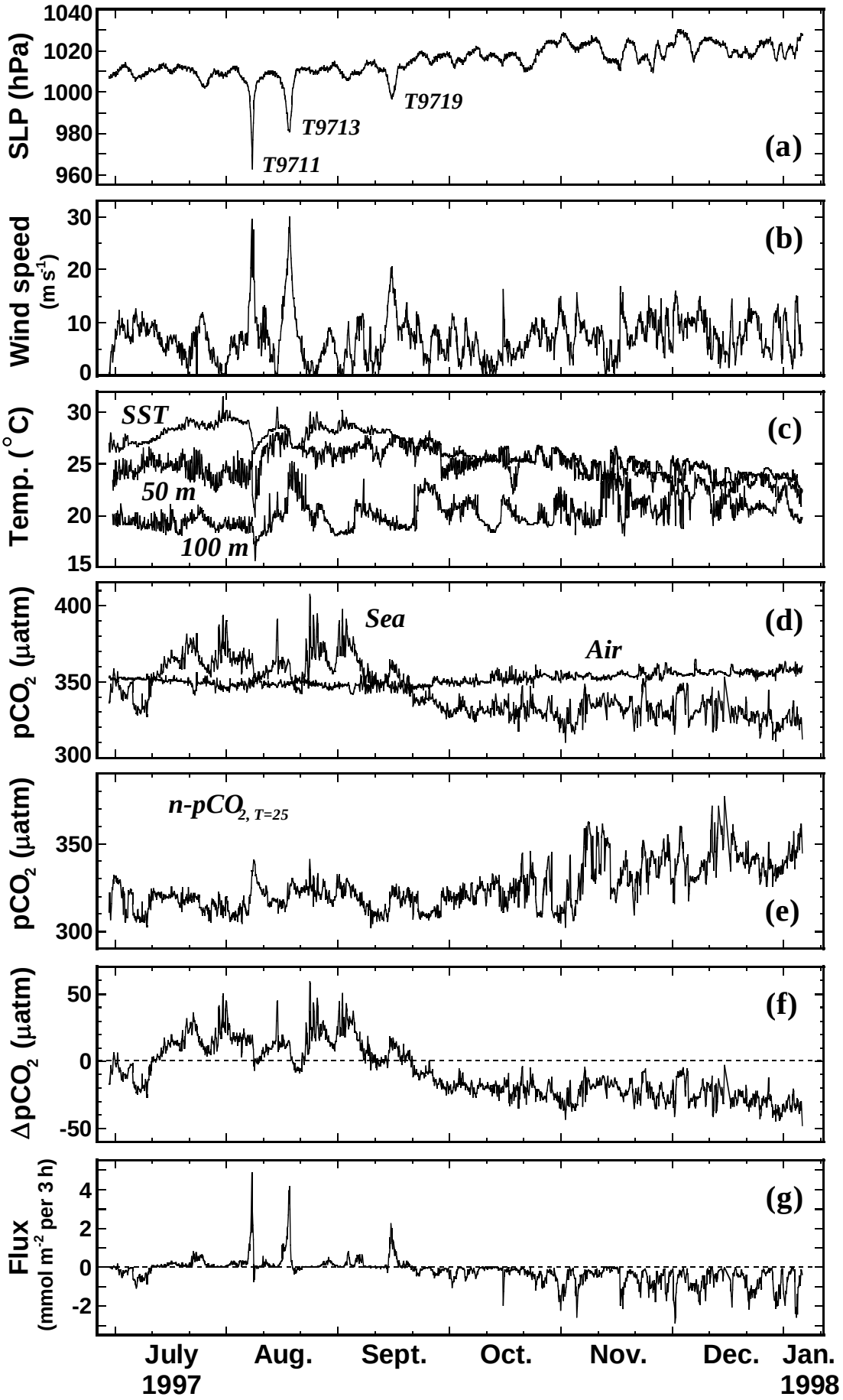
SLP (hPa)
1040
1020
1000
980
960
T9711
T9713
T9719
(a)
Wind speed (m s-1)
30
20
10
0
(b)
Temp. (°C)
30
25
20
15
SST
50 m
100 m
(c)
pCO2 (μatm)
400
350
300
Sea
Air
(d)
pCO2 (μatm)
350
300
n-pCO2, T=25
(e)
ΔpCO2 (μatm)
50
0
-50
(f)
Flux (mmol m-2 per 3 h)
4
2
0
-2
(g)
July 1997
Aug.
Sept.
Oct.
Nov.
Dec.
Jan. 1998

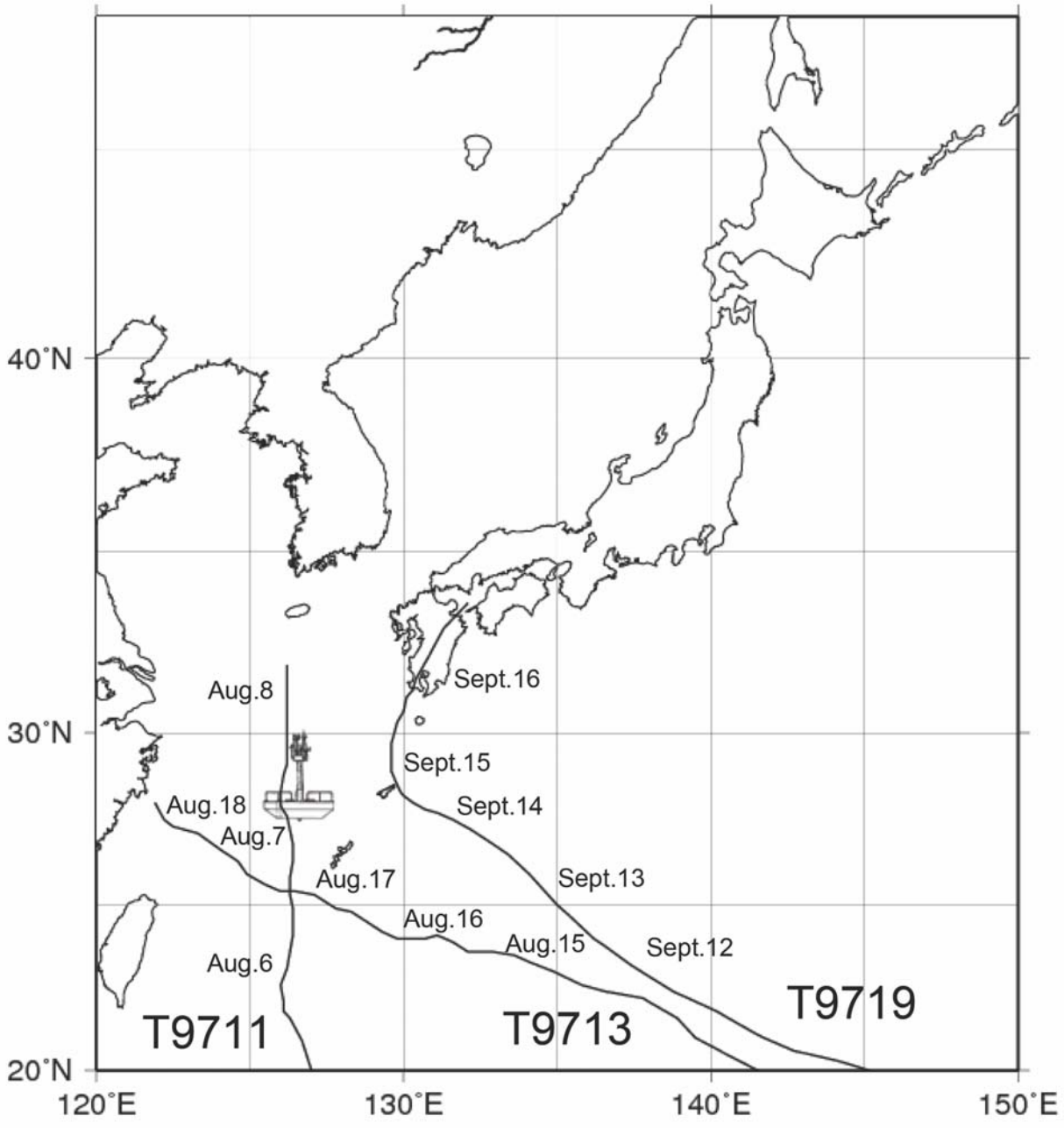
40˚N
30˚N
20˚N
120˚E
130˚E
140˚E
150˚E
Aug.8
Aug.18
Aug.7
Aug.17
Aug.16
Aug.15
Aug.6
Sept.16
Sept.15
Sept.14
Sept.13
Sept.12
T9711
T9713
T9719

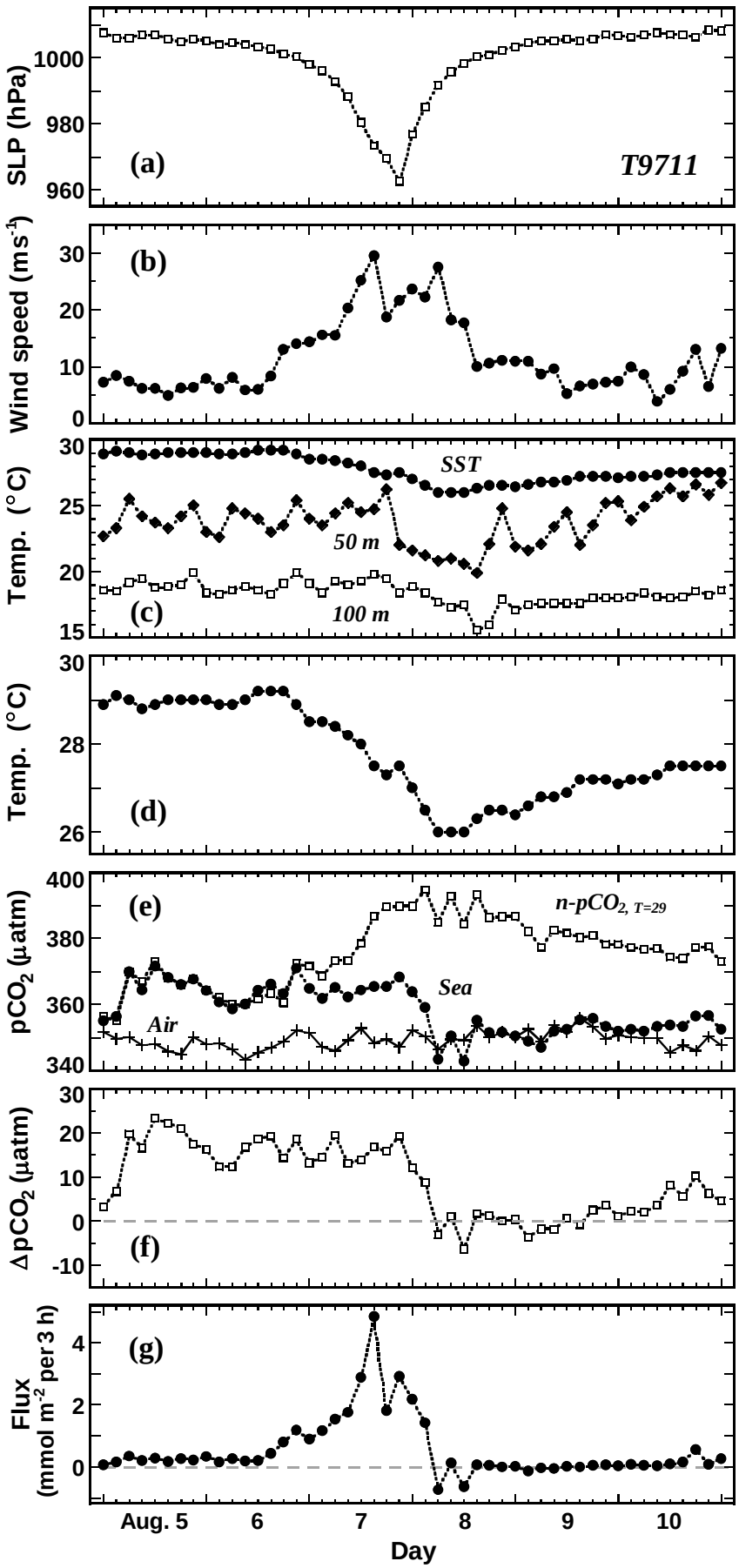
SLP (hPa)
1000
980
960
(a)
T9711
Wind speed (ms-1)
30
20
10
0
(b)
Temp. (°C)
30
25
20
15
SST
50 m
100 m
(c)
Temp. (°C)
30
28
26
(d)
pCO2 (μatm)
400
380
360
340
(e)
n-pCO2, T=29
Sea
Air
ΔpCO2 (μatm)
30
20
10
0
-10
(f)
Flux
(mmol m-2 per 3 h)
4
2
0
(g)
Aug. 5
6
7
8
9
10
Day

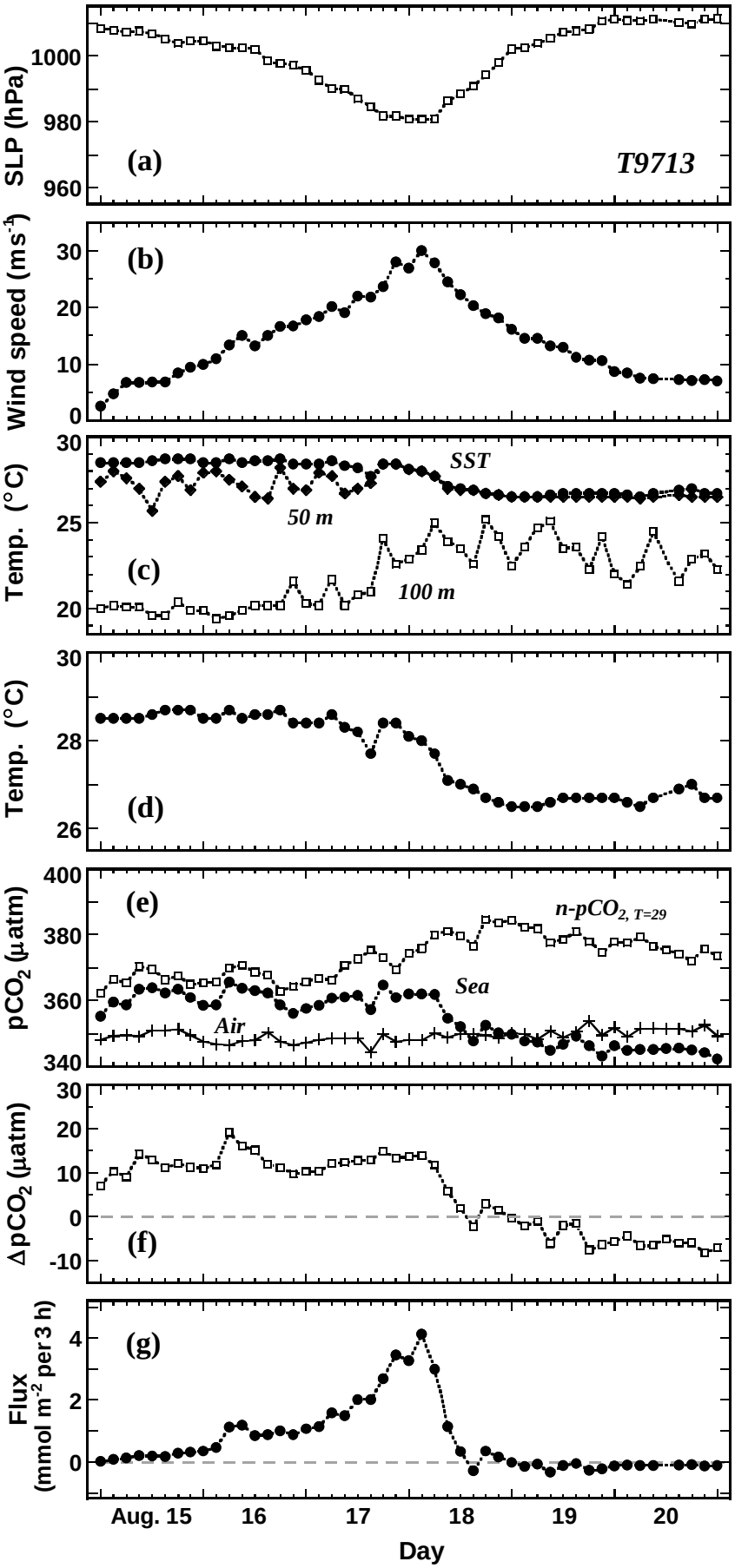
SLP (hPa)
1000
980
960
(a)
T9713
Wind speed (ms-1)
30
20
10
0
(b)
Temp. (°C)
30
25
20
SST
50 m
100 m
(c)
Temp. (°C)
30
28
26
(d)
pCO2 (μatm)
400
380
360
340
(e)
n-pCO2, T=29
Sea
Air
ΔpCO2 (μatm)
30
20
10
0
-10
(f)
Flux
(mmol m-2 per 3 h)
4
2
0
(g)
Aug. 15
16
17
18
19
20
Day

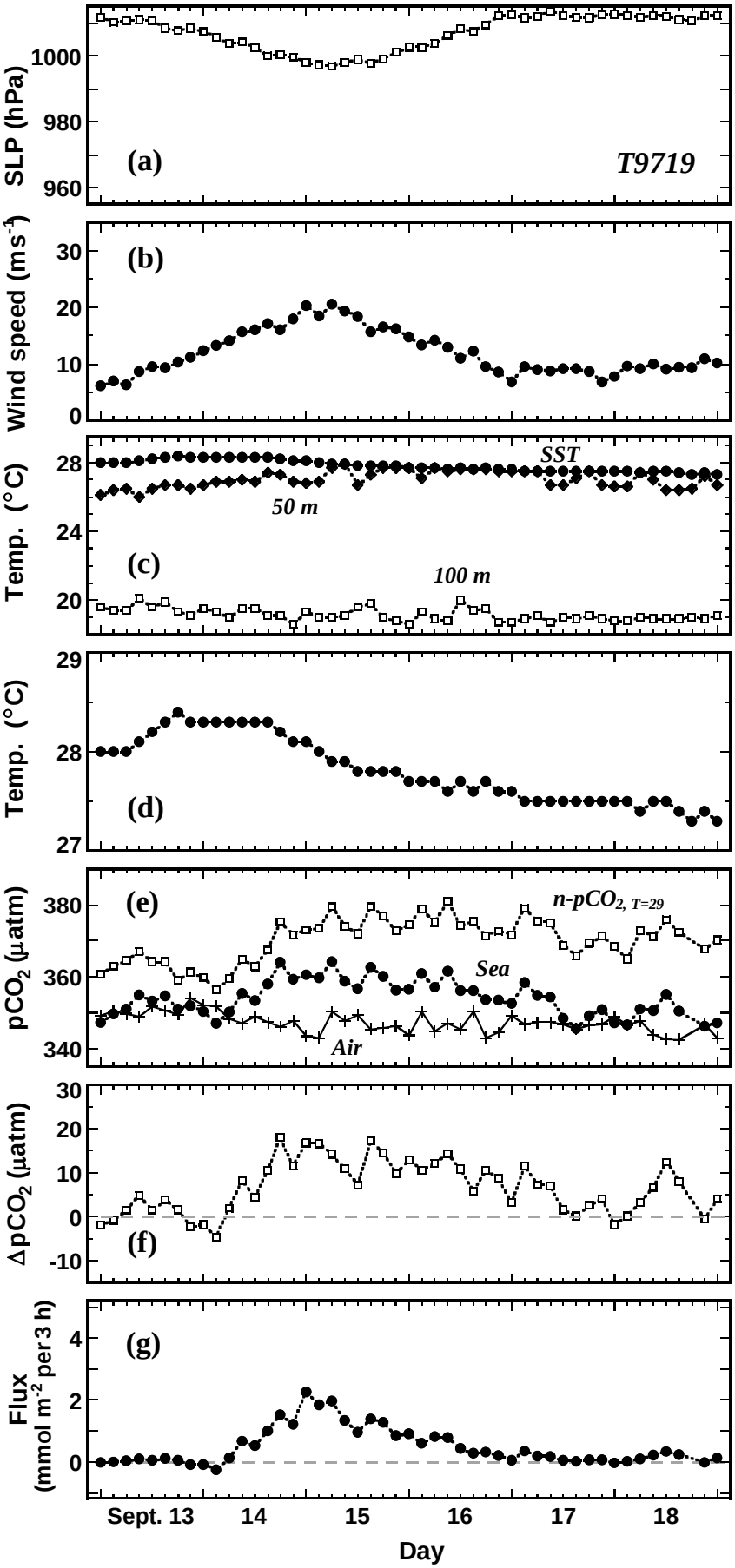
SLP (hPa)
1000
980
960
(a)
T9719
Wind speed (ms-1)
30
20
10
0
(b)
Temp. (°C)
28
24
20
SST
50 m
100 m
(c)
Temp. (°C)
29
28
27
(d)
pCO2 (μatm)
380
360
340
(e)
n-pCO2, T=29
Sea
Air
ΔpCO2 (μatm)
30
20
10
0
-10
(f)
Flux
(mmol m-2 per 3 h)
4
2
0
(g)
Sept. 13
14
15
16
17
18
Day

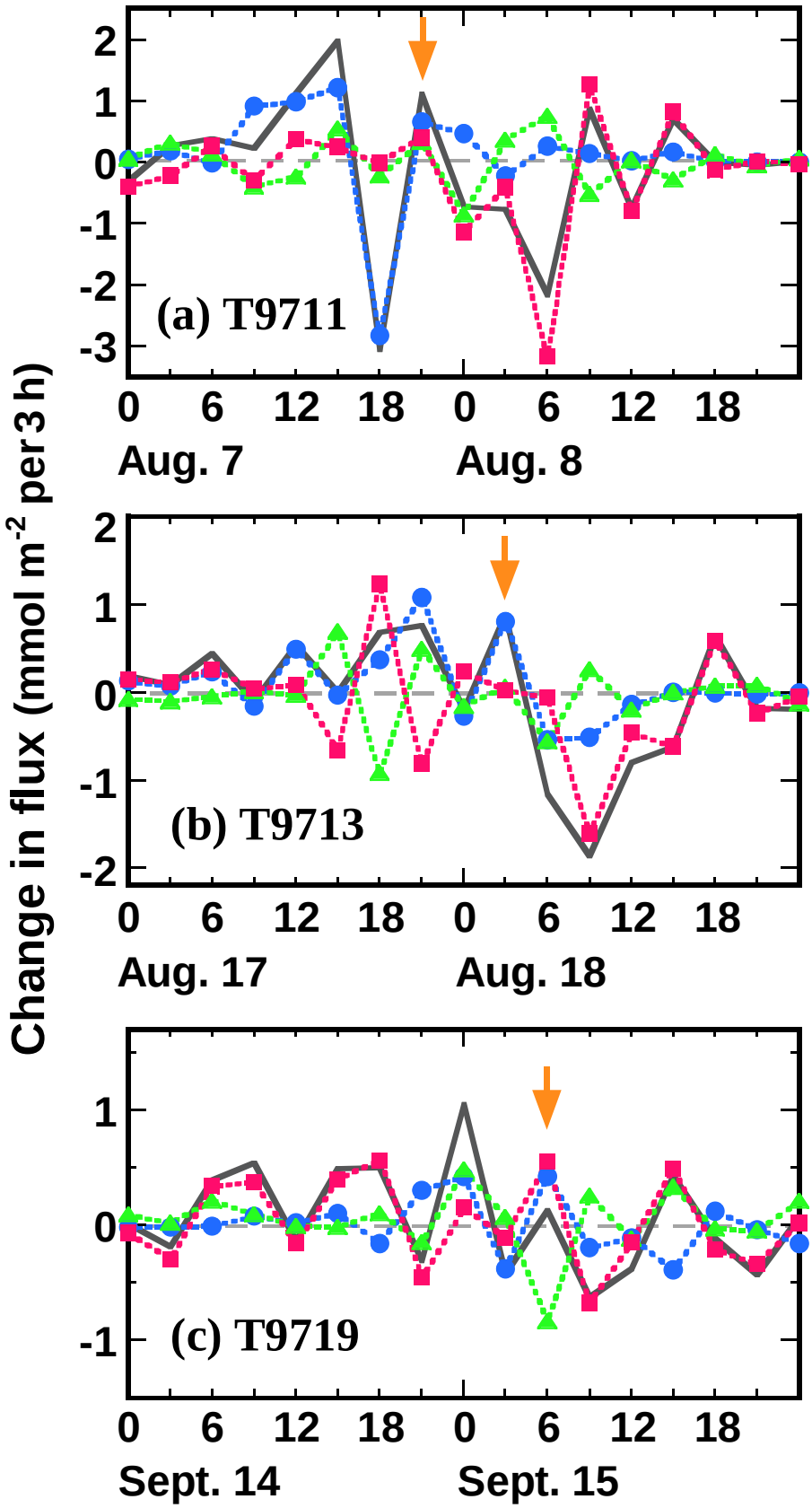
Change in flux (mmol m-2 per 3 h)
(a) T9711
(b) T9713
(c) T9719
0 6 12 18 0 6 12 18
Aug. 7
Aug. 8
Aug. 17
Aug. 18
Sept. 14
Sept. 15