Measurement of electrostatic charge of blowing snow particles in a wind tunnel focusing on collision frequency to the snow surface

Satoshi OMIYA（Graduate School of Environmental Science）
Atsushi SATO　（Snow and Ice Research Center, NIED）

1. Introduction

Blowing snow particles are known to have an electrostatic charge. This charge may be a contributing factor in the formation of snow drifts and snow cornices (Fig.1) and changing of the trajectory of blowing snow particles. These formations and phenomena can cause natural disaster such as an avalanche and a visibility deterioration (Fig.2).

Fig.1 Snow cornice
Snow cornice often causes avalanche occurrence.

Fig.2 Visibility deterioration
Trajectory changing from saltation to suspension causes visibility deterioration.

There are some experimental reports on charge-to-mass ratios of blowing snow particles in the field and the wind tunnel. There are qualitatively consistent in sign, negative. But ….

Wind tunnel experiment
−0.8 ～ −0.1（μ C/kg）

Field observation
−50 ～ −10（μ C/kg）

Huge gap !
・・・・Due to difference of fetch?
in other words
Difference of collision frequency to the snow surface ?

Purpose: To clarify the correlation between the collision frequency of particles to the snow surface and the negative charge accumulation to them.

2. Method

Experiments were conducted in a cryogenic wind tunnel of the Snow and Ice Research Center, NIED (Fig.3). In this experiment, we used Electrometer, Faraday-Cage and Electronic balance to measure the charge-to-mass ratios of blowing snow particles.

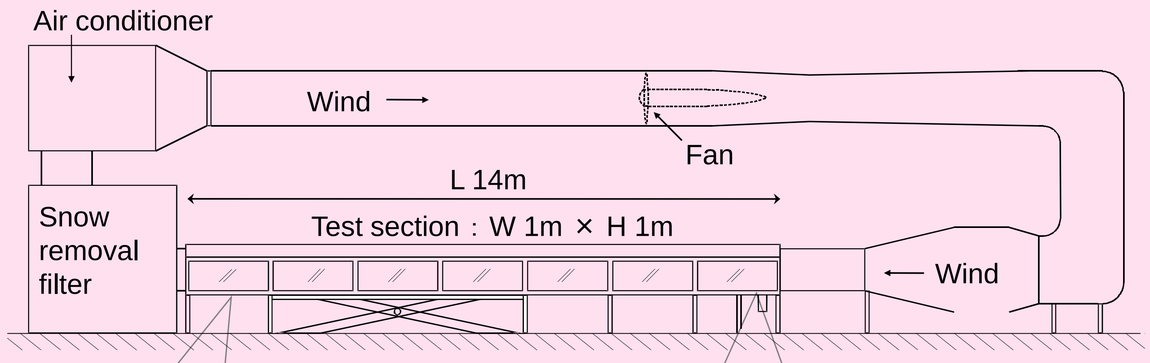

Fig.3 Schematic of wind tunnel

Electrometer (Right)
Faraday-Cage (Left)

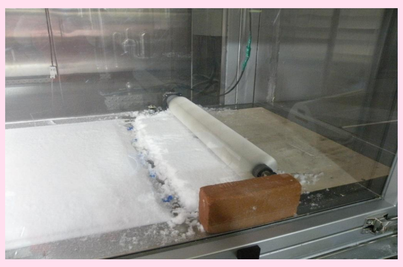

Rolling brash was used to make artificial blowing snow.

3. Experimental condition

- Fetch：**12 m**
- Wind velocity：**4.5 ～7 m/s**
- Air temperature：**−20 ～ −10℃**
- Hard snow surface
  （No particle eject from the surface）
- Spherical particle was used (Fig.4)

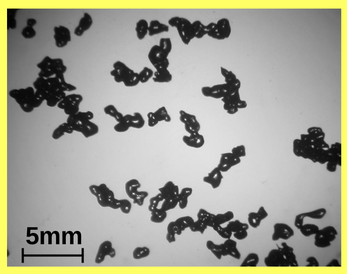

Fig.4 spherical particle

The collision frequency *n* was converted from the wind velocity using the experimental equation（Kosugi et al., 2004）, as below.

$$n = 12/(0.31U - 1.19)$$

Fetch of this experiment　Wind velocity (m/s)

4. Results and Discussion

Charge-to-mass ratios *Q* against the collision frequency *n* is shown in Fig.5. The result shows that repeated collision of blowing snow particles causes negative charge accumulation to them.

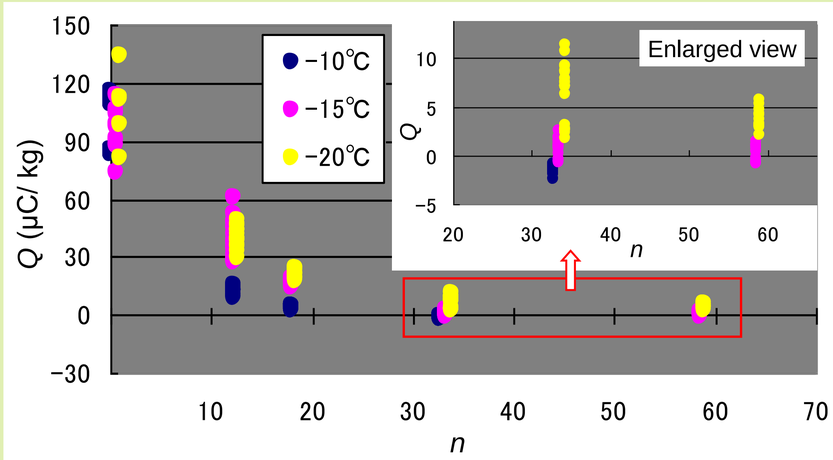

Fig. 5 Charge-to-mass ratio *Q* against the collision frequency *n*

Assuming a logarithmic relationship between the (|⊿*Q*|): variation of *Q*, and *n* (Fig.6), *Q* will reach roughly the same value which was obtained in the field with several hundreds collisions. For instance, *n* is needed approximately 200 times collisions for blowing snow particles to gain –30 μC/kg.

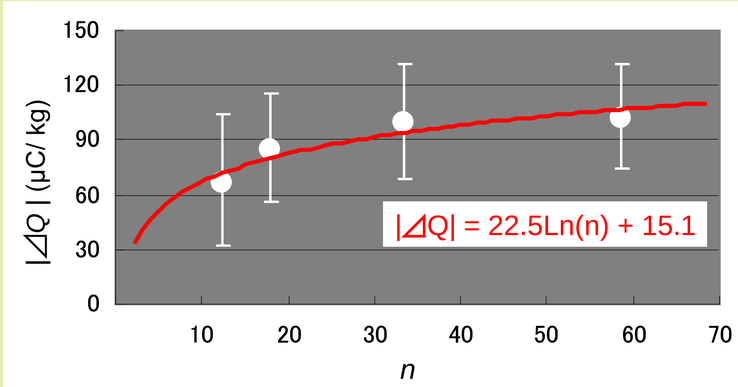

Fig. 6 Absolute value of the variation of *Q* (|⊿*Q*|) against *n*
（Case of −20℃）

Conversion to fetch

7 m/s ・・・・196 m
6 m/s ・・・・134 m
5 m/s ・・・・72 m
4.5 m/s ・・・・41 m

Conclusion

Blowing snow particles accumulates negative charges with increase of collisions to the snow surface. It is suggested that the difference of the fetch is one of factors of the gaps between the field data and the wind tunnel ones.

Reference

Kosugi et al. (2004): Dependence of drifting snow saltation length on snow surface hardness, Cold Reg. Sci. Technol., 39, 133-139.

E-mail：somiya@bosai.go.jp