A Method for Balancing the Supply and Demand in an Isolated System Consisting of Voltage Control Type Inverters in FRIENDS

Mitsushiro Ako, *Non Member,* Ryoichi Hara, *Member, IEEE,* Hiroyuki Kita, *Member, IEEE,*
Toshihisa Funabashi, *Member, IEEE*

***Abstract*— The authors have proposed Flexible, Reliable and Intelligent ENergy Delivery System (FRIENDS) as a future power distribution system. In the FRIENDS, new facilities called Quality Control Centers (QCCs) which consist of power electronics devices, distributed generators (DGs), energy storage systems (ESSs), etc. are installed between distribution substations and customers. By controlling and operating those devices in QCCs adequately, various functions can be realized. Particularly, when a power supply from the transmission network is interrupted, isolated local networks which consist of some QCCs are composed in order to realize uninterruptible power supply. In the isolated local network, the DG and ESS in QCCs are employed as backup generators. This paper proposes a novel distributed and autonomous method for balancing the supply and demand during isolated operation. This paper also investigates the effectiveness of the proposed method through some computational simulations using PSCAD/EMTDC.**

***Index Terms*—Distributed generation, uninterruptible power supply, FRIENDS.**

Acronyms

ACE: area control error
AGC: automatic generation control
DG: distributed generators
ESS: energy storage system
FC: fuel cell
FFC: flat frequency control
FRIENDS: flexible, reliable and intelligent energy delivery system
GF: governor-free operation
TBC: tie-line bias control
PCC: point of common coupling
QCC: quality control center
Q-TBC: tile-line bias control for reactive power

M. Ako is with Graduate School of Information Science and Technology, Hokkaido University, 060-0814, Sapporo, Japan (e-mail: ako@ee4-si.eng. hokudai. ac.jp).

R. Hara and H. Kita are now with the Department of Informatics for System Synthesis, Hokkaido University, 060-0814, Sapporo, Japan (e-mail: {hara, kita}@ssi.ist.hokudai. ac.jp).

T. Funabashi is now with Meidensha Corp., ThinkPark Tower, 2-1-1, Osaki, Shinagawa-ku, Tokyo, 141-6029 Japan (e-mail: funabashi-t@mb.meidensha. co.jp).

I. Introduction

RECENT deregulation in the electric power industry and pressing concerns about global environmental issues as well as an energy crisis have led to an increase in installation capacity of Distributed Generators (DGs) and Energy Storage System (ESSs). Enthusiastic R&Ds and price reductions are accelerating the pace of DG and ESS installation. However, reversal and/or unsteady power flows caused by DG output may hinder management of the voltage profile of distribution system, frequency control, etc. In the future, power distribution systems should be designed and constructed taking into account such technical problems. Another trend in the power industry is diversification of customer requirements for power quality level. Some customers require excellent power quality due to their high dependency on electricity, while other customers place more value not in quality but in cost. Future power systems, distribution systems in particular, will be required to become more favorable to both customers and DG/ESS.

Some new concepts regarding power distribution systems which can coexist with many DG/ESS systems have been developed, for example, MicroGrid [1], Custom Power Park [2], Demand Area Power System [3], and so on. The authors have also proposed a new power distribution system named *Flexible, Reliable and Intelligent ENergy Delivery System* (FRIENDS) [4]. In the FRIENDS, new facilities called *Quality Control Center* (QCC) which consists of power electronics devices, DGs, ESSs, etc. are installed between distribution substations and customers as shown in Fig. 1 (a QCC is assumed to be installed per one building in an urban area, for example). By controlling and operating those devices in a QCC adequately management and unbundling of power quality levels, power conditioning, advanced-demand side management, etc. can be realized [5].

One of the key functions in power quality management is to improve the reliability of power supplies. The FRIENDS aims to realize an uninterruptible power supply by using the DG/ESS as backup generators. Particularly, when power supply from the transmission network is interrupted, some QCCs are interconnected each other and constitute an isolated local

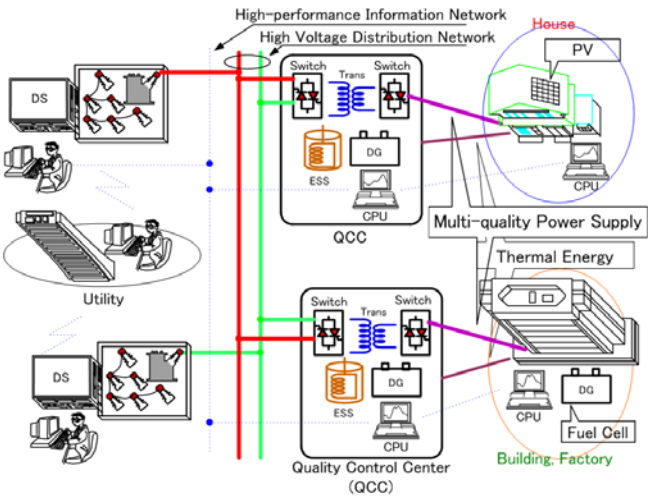

Fig.1. Concept of FRIENDS.

network to supply electricity for customers without interruptions [6]. Since the capacity of an isolated FRIENDS network is much smaller than the already existing bulk transmission power system, balancing the supply and demand in an isolated system with multiple backup resources becomes a more difficult operation. For this difficult and complicated situation, we can consider two approaches; communication based approach and communication-less approach. The former approach can realize sub-optimal balancing (for example, effective load assignment to multiple backup resources), however, the dynamic behavior of balancing strongly depends on the communication delay. The latter approach, on the other hand, can realize the stable dynamic performance and show a high fault tolerance against the communication failures. Considering the main motive of isolated operation – improvement in supply reliability, this paper proposes a novel distributed and autonomous (communication-less) method for balancing the supply and demand in an isolated system.

Some autonomous (communication-less) balancing methods for an isolated system in which a multiple DG/ESS are utilized as backup generators have been proposed based on the conventional frequency control scheme [7], [8]. A basic idea employed in these past works is to implement a speed droop characteristic in the output control system of DG/ESS. Most past works [9-11] aim to balance the supply and demand within an isolated local network. Our method, on the other hand, aims to achieve not only a balance within the local QCC network, but also a balance within each QCC. This is because every QCC is assumed to be responsible for feeding its own customers in the FRIENDS concept. The novel control method for realizing the above-mentioned balancing scheme is proposed in this paper. Furthermore, this paper also investigates the effectiveness of the proposed method through various computational simulations using PSCAD/EMTDC in which the detailed dynamics of DG are considered.

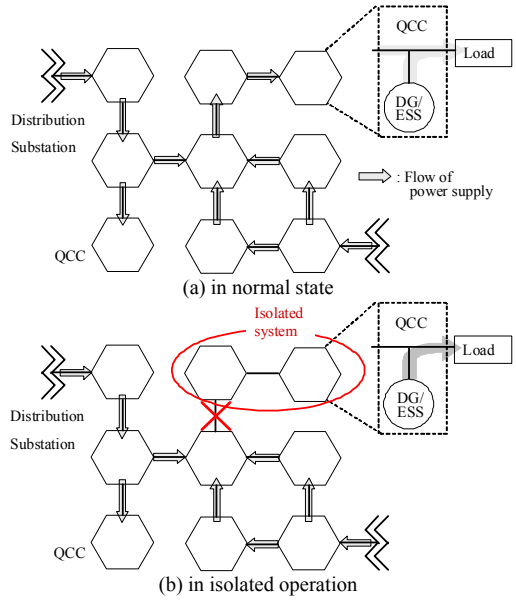

Fig.2. Operation of QCC in (a) normal state and (b) isolated operation.

II. Operation and Model of QCC

A. Operational Policy

In the concept of FRIENDS, QCCs are interconnected by high voltage distribution feeders and constitute a local network in which every QCC becomes a node (loop configuration is also permitted). This local network interconnects to the transmission or subtransmission system through distribution substations. In a normal state, every QCC supplies the customer with power which is fed from the transmission networks through the high voltage distribution feeders and the DG/ESS in the QCC. (Fig. 2 (a)). When a fault occurrence interrupts the power supply to some QCCs, they are disconnected from the other QCCs and constitute a local system as shown in Fig. 2 (b). A detailed method for constituting a local system was proposed in [6]. In the local system, each QCC basically supplies energy for its own loads. Only when the capacity of backup generators (DG/ESS) in the QCC is insufficient, the other QCCs in the local system compensate for the shortage of capacity. This operational policy is based on the concept that every QCC is responsible for the power supply in its service area (principle of self supply).

B. QCC Model

As a circuit configuration of QCC, this paper employs a so-called UPS-type QCC in which two inverters (Inv.1 and Inv.2), DG and ESS share a dc bus as shown in Fig. 3. The UPS-type QCC can provide four types of quality power levels; *ordinary quality*, *high quality*, *super premium quality* and *dc* (detailed control schemes are explained in [12]). The ordinary quality is distinguished from the other qualities by supply reliability, that is, supply for the ordinary quality is stopped by turning off the thyristor switch when the total capacity of backup generators in the isolated system is insufficient. Therefore, the ordinary quality load is supplied with the lowest

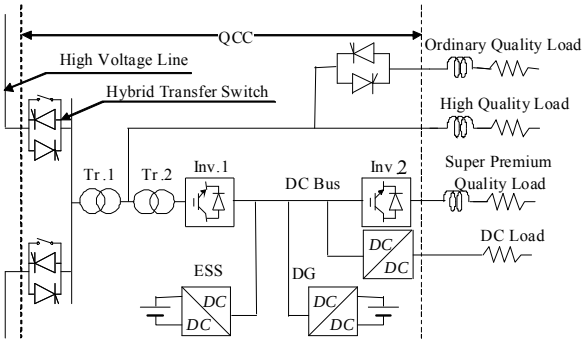

Fig.3. Internal composition of QCC.

price. Furthermore, since the super premium quality and dc are distinguished from the others by waveform quality, the prices for these qualities should be set at relatively expensive. In a normal state, the Inv.1 is driven in the current control mode to supply or draw adequate power to or from the dc bus. The voltage supplied to the ordinary and high quality loads is provided by the main grid. When a fault occurs and the isolated system is constituted, the control mode of Inv.1 in the isolated system is changed to the voltage control mode. That is, the voltage supplied to the ordinary and high quality loads is provided by the Inv.1. A detailed control method of the Inv.1 during the isolated operation is proposed in chapter III.

Here, the super premium and dc lines are supplied from the dc bus through the Inv.2 and the dc-dc converter respectively in both normal state and isolated operation. Therefore, this paper uses a simplified QCC model as shown in Fig. 4 because fault occurrence has less effect on the super premium and dc quality levels. In this simplified model, the super premium and dc loads are not considered and the high and ordinary quality loads are considered as a single impedance load. Furthermore, the DG and ESS which are modeled by a current source are assumed to be interconnected to the ac system through the Inv.1 and reactor *L*.

III. A Method for Balancing The Supply and Demand in An Isolated System

A. Decoupling

Let us define a voltage v_{inv} provided by the Inv.1 in the isolated system as eq. (1):

$$v_{inv} = (V_0 + \Delta v)\sin\{2\pi(f_0 + \Delta f)t\} \tag{1}$$

Where, V_0 and f_0 are the base value of voltage amplitude and frequency, and Δv and Δf are deviations of amplitude and frequency from the base values, respectively. When a load in the isolated system changes, voltage drop along the transformers and the reactor *L* also changes. As a result, voltage at the point of common coupling (PCC) changes and real and reactive power flows among QCCs emerge. In order to satisfy the operational policy described in section II.A, it is necessary to adjust Δf and Δv adequately so that the receiving or sending power becomes zero. As is well-known, real and reactive power flows have stronger coupling with voltage phase angles and amplitude, respectively. Therefore, in this paper, the mechanisms for balancing real and reactive powers are designed separately considering these coupling features.

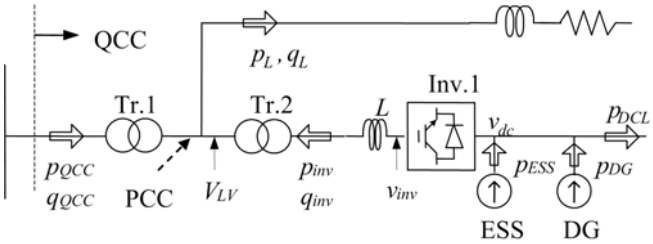

Fig.4. Simplified QCC model considered in this paper.

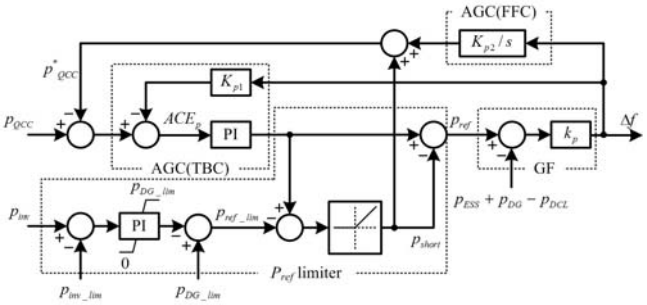

Fig.5. Block diagram for frequency control.

B. Real Power Balancing

The control system for achieving real power balancing is shown in Fig. 5. The proposed method consists of three sub-control systems which correspond to short-term, medium-term and long-term balancing, respectively.

1) Short-term balancing (governor-free)

As stated above, operational policy of the isolated system is based on the principle of self-supply, however, the DG and ESS might not respond to rapid and/or large load changes due to their slow response or capacity constraint. In order to mitigate the burdens of DG and ESS, the proposed method is designed so that the short-term component of load changes can be compensated by all QCCs in the isolated system. Allocation of short-term components to every QCC is autonomously decided by the same mechanism as a governor free operation employed in the conventional bulk power system. More specifically, the frequency deviation Δf is adjusted proportionally to the difference between actual real power supply through Inv.1 (p_{DG}+p_{ESS}-p_{DCL}) and its reference value (p_{ref}) as shown in eq. (2):

$$\Delta f = k_p\{p_{ref} - (p_{DG} + p_{ESS} - p_{DCL})\} \tag{2}$$

Here, p_{DG} and p_{ESS} are output of DG and ESS, p_{DCL} is a power consumed by the super premium and dc load. k_p is a positive proportional gain and is equivalent to speed regulation in the conventional frequency drooping characteristic of a generator. The short-term load allocation mechanism realized by eq.(2) is called governor-free operation (GF) in this paper.

2) Medium-term balancing (TBC)

The purpose of a governor-free operation is to temporarily compensate for a steep load change by all QCCs in the isolated system. Therefore, compensation by the other QCCs should be readjusted so that the principle of self-supply can be achieved.

This readjustment is called medium-term balancing in this paper. The principle of self-supply is very similar to the concept of TBC (Tie-line Bias Control) which has been applied in the conventional automatic generation control (AGC) scheme. Therefore, this paper applies the TBC mechanism as medium-term balancing.

First, the area control error (ACE_p) is calculated based on a frequency deviation determined by eq. (2) and the difference between receiving real power (p_{QCC}) and its reference value (p^*_{QCC}) which corresponds to the tie line bias in TBC.

$$ACE_p = -K_p \Delta f + \left(p_{QCC} - p^*_{QCC}\right) \tag{3}$$

$$K_p = 1/k_p + D_p \tag{4}$$

Here, p^*_{QCC} is set to zero in order to eliminate the real power flow among QCCs. K_p is the power-frequency constant of QCC which is determined by k_p and load-frequency characteristic D_p. Then, the reference for the DG/ESS's output (p_{ref}) is determined by a PI control whose input is ACE_p:

$$p_{ref} = g^{AGC}_{p1} \cdot ACE_p + g^{AGC}_{p2} \int ACE_p dt \tag{5}$$

Where, g^{AGC}_{p1} and g^{AGC}_{p2} are the positive control gain used in the PI control.

3) Long-term balancing (FFC)

In the previous subsection, we assumed that every QCC has enough capacity of power sources (DG/ESS) and inverter (Inv.1) to supply energy for its own customers. Therefore, the TBC operation for balancing the supply and demand can be executed individually in every QCC. In this case, if the capacity of QCC was short, its own load would be shed according to the predefined order of priorities. However, if there are surplus energy resources in other QCCs, they should be used to balance the supply and demand as a whole of the isolated local systems.

For example, when a load supplied by a QCC (hereafter, call QCC #A) has increased over the capacity of the power source in QCC #A and the total outputs of power sources (p_{DG}+p_{ESS}) exceed the upper limit of its reference (p_{ref_lim}), the GF mechanism decreases the inverter voltage frequency. Consequently, the voltage phase angle of QCC #A lags behind than the other QCCs; therefore, the power from the other QCCs will flow toward QCC #A. Since power exchanges occur at all QCCs, the deviation between p_{QCC} and p^*_{QCC} appears in all QCCs. Therefore, the frequency in a whole isolated local system has a steady state deviation. To eliminate the frequency deviation, the proposed method adjusts p^*_{QCC} in every QCC.

Initially, at the QCC #A, p^*_{QCC} is adjusted by p_{short}. Here, p_{short} represents the shortage in the power source observed in QCC #A and is calculated in the P_{ref} limiter. Conversely, at the other QCCs, it is difficult to recognize the total shortage in the isolated system since the proposed method assumes that every QCC does not communicate with any other QCCs to balance the supply and demand. To detect the occurrence of capacity shortage in those QCCs, the proposed method uses a frequency deviation caused by the mismatch between p_{QCC} and p^*_{QCC}, as stated above. When there is a capacity shortage in some QCCs, a frequency deviation which can not be eliminated by the TBC emerges in the isolated system. If the QCC detects a shortage of capacity from the frequency deviation, the QCC adjusts its p^*_{QCC} by integral control. By this process, p_{ref} can be adjusted until it becomes an appropriate value which takes the power exchange into account, and subsequently, the difference between p_{QCC} and p^*_{QCC} can be eliminated.

This idea is almost equivalent to the flat frequency control (FFC) which has been applied in the conventional AGC scheme. This control should be effective only in cases where frequency deviation cannot be eliminated by the TBC. Furthermore, the FFC should work without any interference from the GF. From this point of view, the integral gain for adjusting p^*_{QCC} must be smaller than the integral gain of PI control for the TBC.

C. Reactive Power Balancing

As stated in the previous section, voltage magnitude at the PCC also changes when the connected load changes. Therefore, reactive power flows among the QCCs appear as real power flows do. In order to stabilize voltage magnitude at the PCC and eliminate the reactive power flows among QCCs, this paper will apply the idea of Q-TBC which has been recognized as TBC for reactive power. More specifically, the receiving real power p_{QCC} in TBC is replaced with the receiving reactive power q_{QCC} and the subsequent frequency deviation in TBC is replaced with a deviation of voltage at the PCC from its reference. The area-control error of reactive power (ACE_q) can be calculated for the above values:

$$ACE_q = -K_q (V_{LV} - V_{LV0}) + (q_{QCC} - q^*_{QCC}) \tag{6}$$

Here, K_q represents the relation between reactive power and voltage magnitude, q^*_{QCC} is the reference value for q_{qcc} and is defined as zero for eliminating the reactive power flow. The inverter's output voltage magnitude is then determined by the PI control whose input is ACE_q:

$$\Delta v = g_{q1} \cdot ACE_q + g_{q2} \int ACE_q dt \tag{7}$$

Where, g_{q1} and g_{q2} are positive control gains used in the PI control.

Adjustment of the reactive power by inverters is free from constraints of the DG response and energy capacity of the ESS, therefore, this control does not need the GF mechanism. This control method is shown in Fig. 6.

This paper assumes that reactive power is exchanged among QCCs only when the current capacity of Inv.1 is deficient. Specifically, when q_{inv} has increased over it limit (q_{inv_limit}) which is determined by the current capacity of inverter and/or the inverter real power output (see III.D), q^*_{QCC} is adjusted to exchange reactive power among QCCs. Stable reactive power exchanges among QCCs require a steady state deviation of voltage magnitude at the PCC. In order to maintain the PCC voltage within its allowable range, an integral controller is

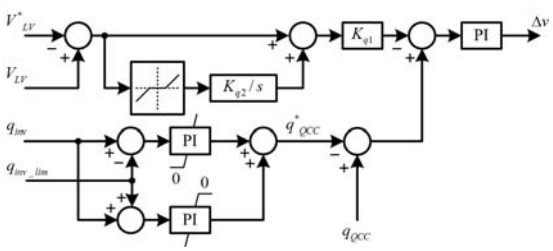

Fig.6. Block diagram for voltage amplitude control.

employed parallel to eq.(6).

D. Policy of Power Exchange at Inverter Capacity Shortage

Several operational policies for power exchanges at the inverter current capacity shortage can be considered. This paper considers and compares the following two operational procedures.

1) Prioritized capacity allocation for real power

In this procedure, allocation of the inverter capacity for real power is given priority over reactive power. That is,

$$p_{inv\_lim} = S_{inv\_lim} \tag{8}$$

$$q_{inv\_lim} = \sqrt{S_{inv\_lim}{}^2 - p_{inv}{}^2} \tag{9}$$

Where, S_{inv_lim} is the inverter capacity.

2) Prioritized capacity allocation for reactive power

Conversely, for this procedure, allocation of the inverter capacity for reactive power is given priority over real power.

$$p_{inv\_lim} = \sqrt{S_{inv\_lim}{}^2 - q_{inv}{}^2} \tag{10}$$

$$q_{inv\_lim} = S_{inv\_lim} \tag{11}$$

E. Control of DG and ESS Output

This paper assumes that the DG and ESS play the role of backup generator in the isolated system. The ESS can operate with rapid responses, however, it also has energy constraints regarding charging and discharging operations. On the other hand, the DG has complementary characteristics; slow response and sustainable generation ability. Therefore, it is necessary to dispatch supplying power among the two sources, considering these complementary features. The proposed method of DG and ESS output control realizes adequate generation dispatch by a control system shown in Fig. 7.

The proposed control system uses deviation of dc bus voltage ($\Delta v_{dc}=v^*_{dc}-v_{dc}$) caused by the mismatch between inverter output and DG/ESS output as an input signal. DG/ESS output required for stabilizing the dc bus voltage (p_{vdc}) is determined by PI control. p_{vdc} is also used as a part of the reference for DG output, however, a DG with a slow response cannot follow the rapid change of p_{vdc}. The residual required power is compensated by ESS output (p_{ESS}). In order to regulate the state of the charge level, a feedback loop of the energy stored in the ESS is added to p^*_{DG}.

Moreover, this paper assumes the fuel cell (FC) to be DG. A detailed computational model of the FC has been developed in [14] based on the experimental results using an actual FC. This paper employs this FC model in the following simulations because it can represent dynamics of real FC well. The employed FC model consists of three parts; reformer device and fuel cell stack which are modeled by first-order lag element with 1.3s and 0.26s time constant, and a ramp constraint element with allowable ramp rate of 10%kW/s. Schematic diagram of the FC model and its parameters are shown in Fig. 8 and Table I.

IV. Simulation

Some computational simulations were carried out to investigate the effectiveness of the proposed method. The internal structure of every QCC was modeled as shown in Fig.4. Each QCC is assumed to have same electrical specifications as follows:

- Voltage level at primary distribution network: 2.2kV
- Voltage level at secondary distribution nework: 400V
- Voltage level at ac side of Inv.1: 200V
- Interconnection reactor of each Inv.1: 0.2mH
- Capacitor at dc side of Inv.1: 2000μF
- The super premium and dc load at each QCC: not connected
- The ordinary and high quality load: modeled as constant inductive impedance load with a power factor of 0.9.

An isolated system was constituted by three QCCs on PSCAD/EMTDC as shown in Fig. 9. The purpose of these simulations was to verify whether or not the supply and demand in an isolated system can be balanced with the proposed method. Therefore, simulations were begun on the condition that an isolated system had already been formed, and loads in QCCs had been changed at t=20s and t=40s as shown in Table II. The

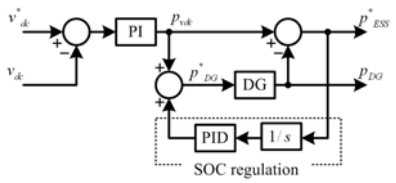

Fig.7. Block diagram for DG and ESS output control.

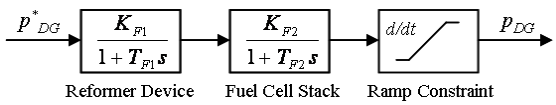

Fig.8. Model of FC [11].

TABLE I
PARAMETER OF FC[11]

Gain : K_{F1}	1.0
Time Constant : T_{F1}[sec]	1.3
Gain:K_{F2}	1.0
Time Constant : T_{F2}[sec]	0.26
Rump Rate[%kW/sec]	10.0

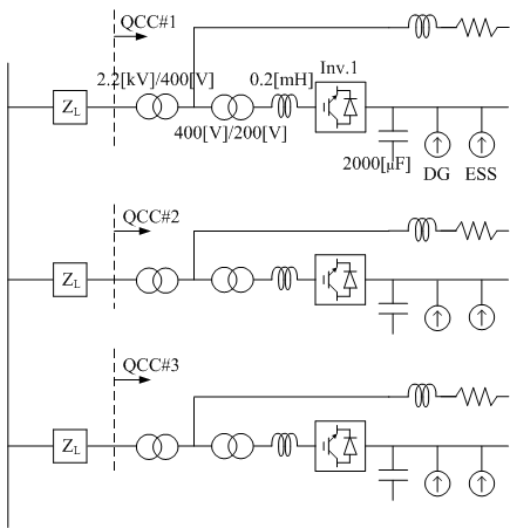

Fig.9. Isolated system model.

TABLE II
CONSUMPTIONS OF LOADS IN EVERY QCC

simulation time	QCC#1	QCC#2	QCC#3
~20s	300	300	300
20~40s	380	400	300
40s~	380	500	300

all in kW (p.f.=0.9)

TABLE III
PARAMETER OF VOLTAGE CONTROL

k_p	1.0 Hz/MW	k^{LFC}_{q1}	0.05
k^{LFC}_{p1}	0.5	k^{LFC}_{q2}	25 s^{-1}
k^{LFC}_{p2}	0.8 s^{-1}	K_{q1}	1.0 Mvar/V
K_{p1}	1.0 MW/Hz	K_{q2}	5 Mvar/V/s
K_{p2}	0.167 MW/Hz/s	V_0	200 V
f_0	50 Hz	V^*_{LV}	400 V

parameters of the voltage controls are shown in Table III, which are common to every QCC. The capacity of DG in every QCC was assumed to be 500kW. Therefore, the DG capacity shortage occurred in QCC#2 after 40s. The capacity of the inverter was treated as a parameter and the following three cases were considered; (case 1) the inverter has enough capacity, (case 2) the capacity of the inverter is 500kVA and is allocated for real power preferentially and (case 3) the capacity of the inverter is also 500kVA but is preferentially allocated for reactive power.

A. *Simulation Results within the Capacity Constraints*

As a simulation result, Fig.10 shows real and reactive power outputs of the inverter (p_{inv} and q_{inv}), load consumptions (p_L and q_L), frequency of inverter output voltage (f) and voltage on the lower voltage side at PCC (V_{LV}) at the first load change. Note that there are no capacity constraint violations before and after the first load change. Fig.10 shows that the real power output of inverters is changed and that frequencies are also changed right after the load change. Consequently, the changes in load consumption can be supplied by all inverters in the isolated system. Then, about 10s after the load changes, the frequency deviations are eliminated and the inverter outputs coincide with load consumptions in every QCC. This demonstrates that the TBC mechanism can operate effectively. Additionally, voltages at the PCC are decreased due to load change, however, they can be recovered by reactive power control of the inverter in about 0.3s. Simultaneously, the reactive power outputs of inverters are adjusted, corresponding to a change in the reactive power demand of every QCC as well as the real power. This shows that the Q-TBC mechanism can operate effectively, as well. These simulation results indicate that the proposed method can realize the principle of self-supply within the DG and inverter capacity constraints.

B. *Power Exchanges due to DG Capacity Shortage (case 1)*

Fig.11 shows real power outputs of the inverter (p_{inv}), load consumptions (p_L), real power received (p_{QCC}), outputs of DG/ESS (p_{DG} +p_{ESS}), outputs reference (p_{ref}) of DG/ESS (p_{DG} +p_{ESS}), and frequency of inverter output voltage (f) at the second load change as in Case 1. After the load change, p_{ref} reaches its limit (500kW) and p_{DG} +p_{ESS} exceeds it in QCC#2. The FFC mechanism adjusts p_{ref} and, consequently, p_{DG} +p_{ESS}

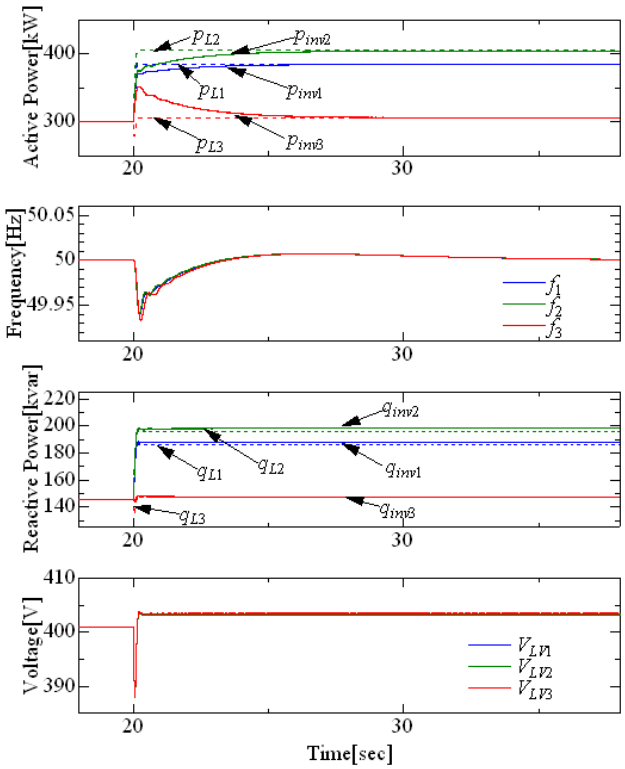

Fig.10. Results of inverter voltage control simulations at the first load change.

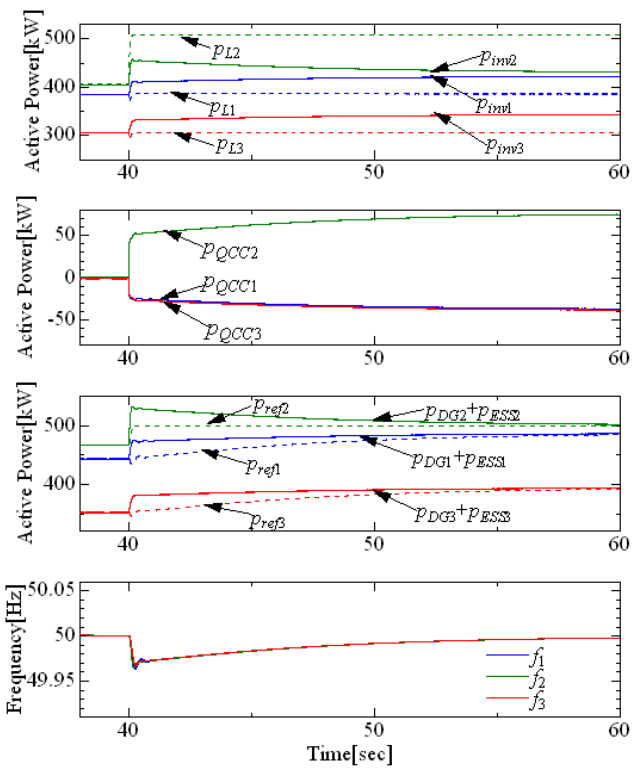

Fig.11. Results of inverter voltage control simulations at the second load change in case1.

in QCC#1 and #3 slowly. The real power supplies from QCC#1 and #3 reduce p_{DG} +p_{ESS} of QCC#2 to its upper limit. We can also find that steady state frequency deviations caused by the DG capacity shortage can be eliminated by the FFC

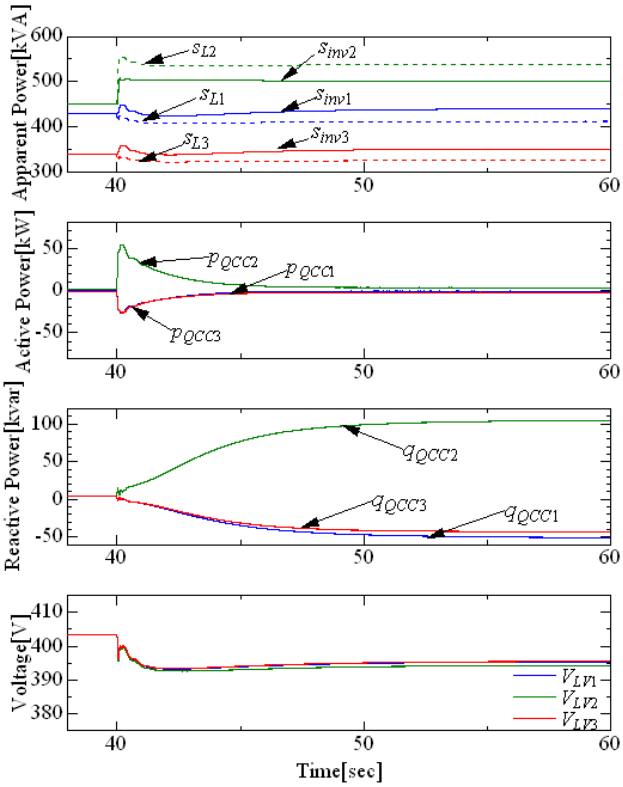

Fig.12. Results of inverter voltage control simulations at the second load change in case.2.

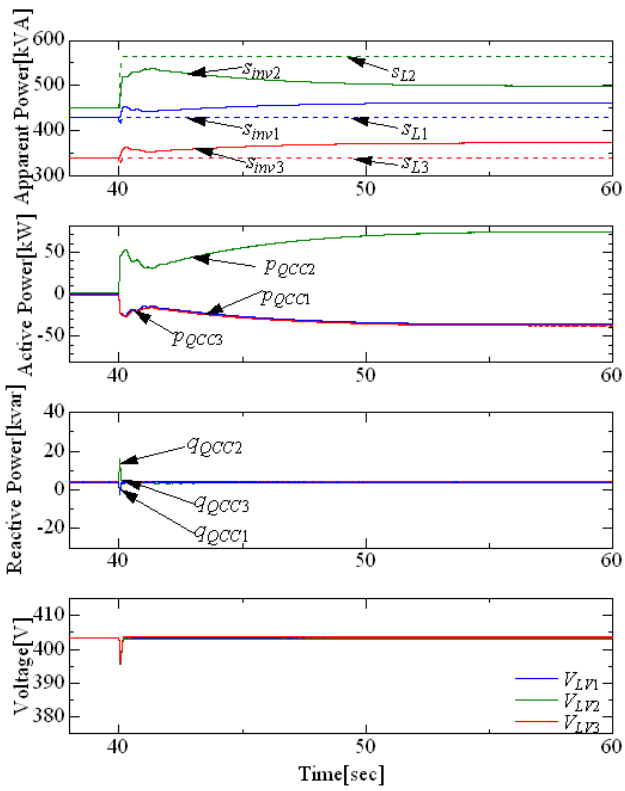

Fig.13. Results of inverter voltage control simulations at the second load change in case.3.

mechanism.

C. Power Exchanges due to Inverter Capacity Shortage (case 2 and 3)

The apparent power outputs of the inverter (s_{inv}), the apparent power consumed by load (s_L), the receiving real and reactive power (p_{QCC}, q_{QCC}) and the voltage at PCC (V_{LV}) at the second load change are shown in Fig.12 (in case.2) and Fig.13 (in case3). Here, s_{inv} and s_L are determined as eq.(12) and (13).

$$s_{inv} = \sqrt{p_{inv}^{\ 2} + q_{inv}^{\ 2}} \tag{12}$$

$$s_L = \sqrt{p_L^{\ 2} + q_L^{\ 2}} \tag{13}$$

In case 2 and 3, the apparent power consumed by load of QCC#2 exceeds the inverter capacity (500kVA). In order to resolve this shortage, reactive power is drawn from the other QCCs in Fig.12 because capacity allocation for the real power supply is given priority. As a result, the apparent inverter power in QCC#2 can be suppressed within the capacity limit. During the reactive power exchange adjustment process, the V_{LV} of each QCC become lower than the acceptable voltage range (assumed to be 395~405V). This lower limit violation of V_{LV} can be resolved by an integral controller employed as shown in Fig. 6. The reactive power flow requires differences of voltage magnitude; therefore, V_{LV} cannot be recovered to a nominal value under this control scheme.

Conversely, as shown in Fig.13, real power exchanges emerge to resolve the inverter capacity shortage in QCC#2 because reactive power capacity allocation is given priority in case 3. We can also find that an inverter capacity shortage can be eliminated by the proposed method.

These simulation results showed the validity of the proposed method under the load increasing scenario. The authors have also investigated the behavior of the proposed method under the load decreasing scenario. As a result, it was confirmed that the principle of self-supply can be achieved if each load is larger than the minimum output level of DG. When a load becomes smaller than the minimum output level of DG, it was ascertained that the output of DG in the other QCCs is decreased by the FFC mechanism.

V. Conclusion

This paper proposed an autonomous and distributed control method for balancing supply and demand in an isolated local system consisting of voltage control type QCCs. More specifically, balancing supply and demand can be achieved in every QCC by the concept of frequency control which has been applied in conventional bulk-power systems. Additionally, when one QCC cannot balance the supply and demand due to capacity shortage at the DG or inverter, deficient power can be supplied from other QCCs, as is proven in the proposed method. Validity of the proposed control method was ascertained through various computational simulations. Remaining future studies are; investigation on stability of the isolated system, effect of rotating machine presence on the stability, and development of the detailed isolation process and

re-synchronization process of the isolated system to the grid. This paper discusses from the technical points of view; design of institutional arrangements among QCC owners is also another important issue to be discussed.

REFERENCES

[1] T. Ichikawa, C. Rhatanz, "Recent Trend in Distributed Generation Technology, Grid Integration, System Operations", Proc. of 14th Power System Computation Conference, Survey Paper.1, June 2002.

[2] N. G. Hingorani, "Introducing CUSTOM POWER", IEEE Spectrum, Vol.32, pp.41-48, June 1995.

[3] H. Kobayashi, M. Takasaki, "Demonstration Study of Autonomous Demand Area Power System", Proc. of 2005/2006 IEEE PES Transmission and Distribution Conference and Exhibition, pp.548-555, May 2006.

[4] K. Nara, J. Hasegawa, "A New Flexible, Reliable and Intelligent Electric Energy Delivery System", Transactions on Electrical Engineering in Japan, Vol.121, No.1, pp.26-34, January 1997.

[5] K. Nara, J. Hasegawa, T. Oyama, K.Tsuji, T.Ise "FRIENDS: forwarding to future power delivery system", Proc. of 9th International Conference on Harmonics and Quality of Power, Vol.1, pp.8-18, October 2000.

[6] R. Hara, H. Kita, E. Tanaka, J. Hasegawa, "Emergency Operation based on Multi Agent Technology in FRIENDS", Proc. of 14th Power System Computation Conference, Session.3 Paper.4, June 2002.

[7] J. A. Pecas Lopes, C. L. Moreira, A. G. Madureira, "Defining Control Strategies for Analyzing MicroGrids Islanded Operation", Proc. of 2005 IEEE Russia Power Tech, June 2005.

[8] J. M. Guerrero, J. Matas, L. Garcia de Vicuna, M. Castilla, J. Miret, "Wireless-Control Strategy for Parallel Operation of Distributed-Generation Inverters", IEEE Transaction Industrial Electronics, Vol.53, No.5,pp.1461-1470, October 2006.

[9] Charles K. Sao, Peter W. Lehn: "Control and Power Management of Converter Fed Microgrids", IEEE Trans. on Power Systems, Vol.23, No.3, pp.1088-1098 (2008)

[10] J. A. Peças Lopes, Senior Member, IEEE, C. L. Moreira, and A. G. Madureira: "Defining Control Strategies for MicroGrids Islanded Operation", IEEE Trans. on Power Systems, Vol.21, No.2, pp.916-924 (2006)

[11] Po-Tai Cheng, Chien-An Chen, Tzung-Lin Lee, Shen-Yuan Kuo: "A Cooperative Imbalance Compensation Method for Distributed-Generation Interface Converters", IEEE Trans. on Industry Applications, Vol.45, No.2, pp.805-815 (2009)

[12] K. Nara, H. Omi, Y. Mishima, "Optimal Configuration of New Power Delivery System for Customized Power Supply Services", Proc. of 14th Power System Computation Conference, Session.19 Paper.5, June, 2002.

[13] M. Tanimoto, Y. Izui, K. Matsuno, N. Fukuta, K. Deno, T. Sasaki, "An autonomous distributed VQC method based on Q-TBC", Power Engineering Society Summer Meeting, 2000. IEEE, Vol.1, pp.183-188, July 2000.

[14] Shin'ya Obara, "Load Response Characteristics of a Fuel Cell Micro-grid with Control of Number of Units", International Journal of Hydrogen Energy, Vol. 31, Issue 13, pp. 1819-1830, 2006.

Mitsushiro Ako was born on August 9, 1983 in Japan. He received the B.E. and M.Sc. from Hokkaido University, Sapporo, Japan in 2006 and 2008, respectively.

Currently, he works for the East Japan Railway Company.

Mr. Ako is a member of the IEE of Japan.

Ryoichi Hara (M'02) was born on August 10, 1974, in Japan. He received the Ph.D degree from Hokkaido University, Sapporo, Japan, in 2003.

He was appointed as a Research Associate at Yokohama National University, Yokohama, Japan in 2003. In April 2006, he was appointed to his current position as an associate professor at Hokkaido University. His research interests are analysis, operation and control of electric power system. He is particularly interested in technological and economical harmonization of the bulk power system and distributed energy resources.

Dr. Hara is a member of the IEE of Japan.

Hiroyuki Kita (M'02) was born on May 7, 1963, in Japan. He received the M.E. degree from Hokkaido University, Sapporo, Japan, in 1988. He received the Ph.D degree from Hokkaido University in 1994.

In April 1989, he was appointed as an Assistant Professor in the Department of Electrical Engineering, Hokkaido University. In July 2005, he was appointed as a professor, his current position. His research interests include the planning, analysis and control of electric power system.

Dr. Kita is a member of the IEE of Japan.

Toshihisa Funabashi (M'90, SM'96) graduated in 1975 from the Department of Electrical Engineering, Nagoya University, Japan. He received, in March 2000, a Doctor degree from Doshisha University, Japan.

He joined Meidensha Corporation in 1975 and has engaged in research and development on power system simulations and integration of distributed energy resources. Currently, he is a Senior Fellow of the Power Systems Solutions Engineering Division. Dr.

Funabashi is a chartered engineer in UK, and a member of IET and the IEE of Japan.