Performance Evaluation of a Multi-User MIMO System with Prediction of Time-Varying Indoor Channels

Huu Phu Bui, Yasutaka Ogawa, *Fellow, IEEE,* Toshihiko Nishimura, *Member, IEEE,* and Takeo Ohgane, *Member, IEEE,*

***Abstract*—In this paper, the performance of a multi-user multiple-input multiple-output (MIMO) system in time-varying channels is evaluated using measurement data. We consider the multi-user MIMO system using a block diagonalization (BD) scheme and an eigenbeam-space division multiplexing (E-SDM) technique. In an ideal case, the BD scheme eliminates inter-user interference, and the E-SDM technique suppresses inter-stream interference. In actual radio environments, however, channels change over time. This causes interference in the multi-user MIMO system even though the BD scheme and the E-SDM technique are used. To overcome this problem, the authors have developed a simple channel prediction scheme on the basis of a linear extrapolation and have demonstrated its effectiveness by computer simulations assuming the Jakes' model. To verify the performance of the channel prediction scheme in actual environments, we conducted a measurement campaign in indoor environments and measured a large amount of channel data. Using these data, we examined the channel transition and channel tracking with the prediction method. Then we obtained the bit-error rate (BER) performance. The prediction technique was shown to track the channel and improve the BER performance almost to that in the ideal time invariant case.**

***Index Terms*—Multi-user MIMO system, Block diagonalization, Eigenbeam-space division multiplexing, Time-varying environment, Channel prediction, Doppler frequency**

I. Introduction

MULTIPLE-input multiple-output (MIMO) systems have been extensively studied over the last decade because they provide high data rate transmission without increasing the frequency bandwidth [1], [2]. Attention is currently focused not only on single-user MIMO systems but also on multi-user ones that accommodate multiple mobile stations (MSs) simultaneously [3]. Furthermore, capacity of multi-user MIMO channels has been investigated on the basis of measurements [4]–[6]. In MIMO systems, we may have multiple-stream transmission between a base station (BS) and a MS. Thus, we may have inter-stream interference (IStI). In multi-user MIMO systems, we may encounter inter-user interference (IUI) in addition to the IStI. These interferences severely degrade MIMO system, especially in a downlink transmission scenario, because each MS usually has fewer antennas than a BS and does not have enough degrees of freedom to suppress the interferences. A block diagonalization (BD) scheme can eliminate the IUI [7]–[9]. This scheme decomposes a multi-user MIMO channel into multiple independent single-user MIMO channels by forcing the interference to a user from the remaining users to be zero. In addition, to suppress IStI in each single-user MIMO channel, an eigenbeam-space division multiplexing (E-SDM) technique can be applied [10], which is also called a singular value decomposition (SVD) system [11] or MIMO eigenmode transmission system [12]. Therefore, combining the BD scheme and the E-SDM technique is expected to realize efficient transmission in a multi-user MIMO system.

In the downlink multi-user MIMO systems, we need downlink channel state information (CSI) at the BS (transmitter). In a frequency division duplex (FDD) system, the CSI must be fed back from MSs. In this case, the CSI at an actual transmission instant may be outdated because of the feedback delay. In a time division duplex (TDD) system, we can obtain the downlink CSI from the uplink signal because channel reciprocity holds. Even in the TDD system, we encounter the outdated CSI when the time interval between the uplink channel and the downlink transmission cannot be neglected. The effect of CSI delay is a critical issue and has been reported in the literature [13] and the references therein. Also, single-user MIMO systems [14]–[16] and multi-user ones [17], [18] have been investigated on the basis of measurements. We conducted measurement campaigns for a single-user MIMO system [19] and a multi-user one [20] in time-varying indoor environments. On the basis of the measured channel data, we evaluated bit-error rate (BER) performance of MIMO systems. These data show that the outdated CSI much more significantly affects multi-user MIMO cases than single-user ones because MSs have fewer antennas than a BS.

To mitigate the effect of outdated CSI, channel prediction techniques have been developed [16], [21]–[23]. One typical scheme is a linear predictor based on an AR model, and another uses sinusoids composed of the scattered signals.

We proposed linear and second-order channel prediction schemes for a single-user MIMO E-SDM system that use only two and three channel data, respectively [24]. The computational complexity of the method is smaller than the other schemes. Also, we applied the linear channel prediction scheme to a multi-user MIMO E-SDM system, and examined

H. P. Bui is with National Key Lab of Digital Control & System Engineering, University of Technology, Vietnam National University in Hochiminh City, Vietnam (e-mail: bhphu@dcselab.edu.vn).

Y. Ogawa, T. Nishimura and T. Ohgane are with Graduate School of Information Science and Technology, Hokkaido University, Japan (e-mail: ogawa@ist.hokudai.ac.jp; nishim@ist.hokudai.ac.jp; ohgane@ist.hokudai.ac.jp).

The results in this paper were presented in part at the 2011 IEEE AP-S International Symposium, Spokane, USA, July 2011.

the BER performance using computer-generated data. The simulations were done assuming the Jakes' model, and it was shown that the channel prediction method significantly improves the BER performance [25]. In actual propagation environments, however, we may have line-of-sight (LOS) components, and scatterers are not distributed uniformly. In the simulations, it was assumed that the antenna arrays at the BS and MSs consist of omnidirectional antenna elements. However, even though a single isolated antenna has an omnidirectional pattern, the antenna element in an array has a different one. This is due to the effect of mutual coupling among antennas, and affects the BER performance [19], [20]. They were ignored in the simulations. Thus, the channel prediction method must be evaluated on the basis of measurements. We conducted measurement campaigns at a 5.2 GHz frequency band in indoor environments and obtained a large amount of statistically stationary time-varying channels. Using the data, we investigated the effect of the channel prediction scheme and the BER performance for the multi-user MIMO E-SDM system. The authors have reported a portion of the results in the reference [26]. In this paper, we present in detail the effect of the MIMO channel prediction.

The paper is organized as follows. The next section describes the multi-user MIMO system and the linear channel prediction. Section III then presents a detailed measurement setup for our experiment. After that, Section IV details the behavior of channel transitions and predictions. Next, Section V evaluates the BER of the MIMO system in time-varying indoor channels. Finally, Section VI provides the conclusions.

II. Multi-User MIMO System And Channel Prediction

We briefly explain a downlink multi-user MIMO system based on a combination of the BD scheme and the E-SDM technique. For the sake of simplicity of explanation, we assume a two-MS case as shown in Fig.1. We also assume that the BS and each MS have four and two antennas, respectively. This is the same configuration as that we used in our measurements that will be stated later. General and detail description of the multi-user MIMO system is given in reference [25]. We express transmit (TX) symbols for the MS1 and MS2 as $\boldsymbol{s}_1(t)$ and $\boldsymbol{s}_2(t)$, respectively. Also, $\boldsymbol{W}_{\mathrm{TX},1}$ and $\boldsymbol{W}_{\mathrm{TX},2}$ denote the TX weight matrices for the MS1 and MS2, respectively. The received signals at the MS1 and MS2 are given by

$$\boldsymbol{r}_1(t) = \boldsymbol{H}_1\boldsymbol{W}_{\mathrm{TX},1}\boldsymbol{s}_1(t) + \boldsymbol{H}_1\boldsymbol{W}_{\mathrm{TX},2}\boldsymbol{s}_2(t) + \boldsymbol{n}_1(t), \quad (1)$$

$$\boldsymbol{r}_2(t) = \boldsymbol{H}_2\boldsymbol{W}_{\mathrm{TX},2}\boldsymbol{s}_2(t) + \boldsymbol{H}_2\boldsymbol{W}_{\mathrm{TX},1}\boldsymbol{s}_1(t) + \boldsymbol{n}_2(t), \quad (2)$$

where $\boldsymbol{H}_1$ and $\boldsymbol{H}_2$ denote 2×4 matrices for the channels between the BS and MS1 and those between BS and MS2, respectively. $\boldsymbol{n}_1(t)$ and $\boldsymbol{n}_2(t)$ denote thermal noise at MS1 and MS2, respectively. The first terms in the equations are the desired signals for the MSs. The second terms are the interferences from the other user, namely IUI.

In the BD scheme, the TX weights are determined in such a way that the MSs do not receive any IUI. The second terms

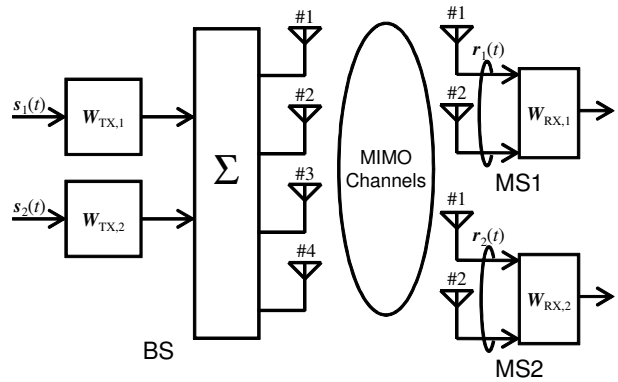

Fig. 1. Multi-user MIMO system (Two-MS case).

in Eqs. (1) and (2) are 0. Thus, we have

$$\boldsymbol{H}_1\boldsymbol{W}_{\mathrm{TX},2} = 0, \qquad \boldsymbol{H}_2\boldsymbol{W}_{\mathrm{TX},1} = 0. \quad (3)$$

The TX matrices satisfying the above equations are given by the SVD of the channel matrices of $\boldsymbol{H}_1$ and $\boldsymbol{H}_2$. We introduce matrices $\boldsymbol{V}_1^0$ and $\boldsymbol{V}_2^0$. The columns in $\boldsymbol{V}_1^0$ form a basis set in the null space of $\boldsymbol{H}_2$. Similarly, the columns in $\boldsymbol{V}_2^0$ form a basis set in the null space of $\boldsymbol{H}_1$. $\boldsymbol{V}_1^0$ and $\boldsymbol{V}_2^0$ are obtained from right-singular vectors with the singular value of 0 for $\boldsymbol{H}_2$ and $\boldsymbol{H}_1$, respectively. In multipath-rich environments, $\boldsymbol{V}_1^0$ and $\boldsymbol{V}_2^0$ are 4×2 matrices. Using $\boldsymbol{V}_1^0$ and $\boldsymbol{V}_2^0$, the TX weight matrices are given by

$$\boldsymbol{W}_{\mathrm{TX},1} = \boldsymbol{V}_1^0\boldsymbol{T}_1, \qquad \boldsymbol{W}_{\mathrm{TX},2} = \boldsymbol{V}_2^0\boldsymbol{T}_2, \quad (4)$$

where $\boldsymbol{T}_1$ and $\boldsymbol{T}_2$ denote 2×2 or 2×1 matrices. When $\boldsymbol{T}_1$ is a 2×2 matrix, 2-stream transmission is done from the BS to MS1, whereas when $\boldsymbol{T}_1$ is a 2×1 matrix (vector), a single-stream transmission is done. This is also the case with $\boldsymbol{T}_2$. $\boldsymbol{T}_1$ and $\boldsymbol{T}_2$ can be arbitrary in the BD scheme. That is, we can eliminate the IUI using arbitrary matrices $\boldsymbol{T}_1$ and $\boldsymbol{T}_2$. Thus, Eqs. (1) and (2) can be rewritten as

$$\boldsymbol{r}_1(t) = \boldsymbol{H}_1\boldsymbol{V}_1^0\boldsymbol{T}_1\boldsymbol{s}_1(t) + \boldsymbol{n}_1(t) \quad (5)$$

$$\boldsymbol{r}_2(t) = \boldsymbol{H}_2\boldsymbol{V}_2^0\boldsymbol{T}_2\boldsymbol{s}_2(t) + \boldsymbol{n}_2(t). \quad (6)$$

The optimum $\boldsymbol{T}_1$ and $\boldsymbol{T}_2$ can be determined by the E-SDM technique as stated in the following. We introduce the equivalent single-user MIMO channel matrices $\boldsymbol{H}_{eq,1} = \boldsymbol{H}_1\boldsymbol{V}_1^0$ and $\boldsymbol{H}_{eq,2} = \boldsymbol{H}_2\boldsymbol{V}_2^0$. They are 2×2 matrices in multipath-rich environments. Substituting these matrices for Eqs. (5) and (6), we have

$$\boldsymbol{r}_1(t) = \boldsymbol{H}_{\boldsymbol{eq},1}\boldsymbol{T}_1\boldsymbol{s}_1(t) + \boldsymbol{n}_1(t) \quad (7)$$

$$\boldsymbol{r}_2(t) = \boldsymbol{H}_{\boldsymbol{eq},2}\boldsymbol{T}_2\boldsymbol{s}_2(t) + \boldsymbol{n}_2(t). \quad (8)$$

From the above equations, we can consider $\boldsymbol{T}_1$ and $\boldsymbol{T}_2$ as the equivalent TX matrices for the MS1 and MS2, respectively. Here, we introduce $\boldsymbol{V}_{\boldsymbol{eq},1}$ and $\boldsymbol{V}_{\boldsymbol{eq},2}$, which are given by the SVD of $\boldsymbol{H}_{\boldsymbol{eq},1}$ and $\boldsymbol{H}_{\boldsymbol{eq},2}$ as follows:

$$\boldsymbol{H}_{\boldsymbol{eq},1} = \boldsymbol{U}_{\boldsymbol{eq},1}\boldsymbol{\Sigma}_{\boldsymbol{eq},1}\boldsymbol{V}_{\boldsymbol{eq},1}^H, \qquad \boldsymbol{H}_{\boldsymbol{eq},2} = \boldsymbol{U}_{\boldsymbol{eq},2}\boldsymbol{\Sigma}_{\boldsymbol{eq},2}\boldsymbol{V}_{\boldsymbol{eq},2}^H \quad (9)$$

Here, $\boldsymbol{\Sigma}_{\boldsymbol{eq},1}$ and $\boldsymbol{\Sigma}_{\boldsymbol{eq},2}$ denote the diagonal singular value matrices, and $(\cdot)^H$ denotes the Hermitian matrix transpose.

Applying the E-SDM technique, the equivalent transmit weight matrices $\boldsymbol{T}_1$ and $\boldsymbol{T}_2$ can be determined as

$$\boldsymbol{T}_1 = \boldsymbol{V}_{\boldsymbol{eq},1}\sqrt{\boldsymbol{P}_1}, \quad \boldsymbol{T}_2 = \boldsymbol{V}_{\boldsymbol{eq},2}\sqrt{\boldsymbol{P}_2}, \tag{10}$$

where $\boldsymbol{P}_1$ and $\boldsymbol{P}_2$ are the diagonal transmit power matrices for the MS1 and MS2, respectively. The diagonal element is the transmit power corresponding to the stream.

From Eqs. (4) and (10), the TX weight matrices are given by

$$\boldsymbol{W}_{\mathrm{TX},1} = \boldsymbol{V}_1^0\boldsymbol{V}_{\boldsymbol{eq},1}\sqrt{\boldsymbol{P}_1}, \quad \boldsymbol{W}_{\mathrm{TX},2} = \boldsymbol{V}_2^0\boldsymbol{V}_{\boldsymbol{eq},2}\sqrt{\boldsymbol{P}_2}. \tag{11}$$

The optimum number of the streams, modulation schemes, and power allocation are determined in such a way that the Chernoff upper bound of BER has the lowest value [10].

At the MSs, to demultiplex the received signals, we use weight matrices $\boldsymbol{W}_{\mathrm{RX},1}$ and $\boldsymbol{W}_{\mathrm{RX},2}$, which realize the maximal ratio combining (MRC) or spatial filtering on the basis of the minimum mean square error (MMSE) criterion. This is the concept of the multi-user MIMO E-SDM scheme.

The TX weight matrices given by Eq. (11) do not interfere with the other MS, and we do not have interference between streams. That is, we have neither IUI nor IStI. Also, the resources can be allocated optimally. However, in time-varying environments, the channel matrices are a function of time. The channels at the actual transmission time differ from those used to determine the TX weight and allocate the resources. The outdated CSI does not guarantee Eq. (3) and causes IUI. Also, we have interference between streams, and the resources may not be optimally allocated any more. In the remainder of this paper, we assume that the MSs have perfect CSI, and that the RX weight matrices $\boldsymbol{W}_{\mathrm{RX},1}$ and $\boldsymbol{W}_{\mathrm{RX},2}$ are determined by the MMSE criterion. Thus, when the BS uses single-stream transmission for each MS, the MS receivers can cancel the IUI for the two-MS case shown in Fig.1. However, when multi-stream transmission is used, the interference cannot be suppressed at the MS sides and system performance can be seriously degraded.

Now, we describe the channel prediction scheme [25]. In this paper, we assume a TDD system such as HIPERLAN/2 [27]. Also in 3GPP LTE and mobile WiMAX, TDD systems are standardized in addition to FDD ones [28], [29]. The channel is predicted by linear extrapolation as shown in Fig.2. Uplink and downlink signals are transmitted with a period of T_f, which is the frame duration in the TDD system. The BS estimates the channels for the MSs using uplink ACK packets, and sends downlink (DL) packets using the multi-user MIMO E-SDM scheme. We assume that the ACK and DL packets are so short that we can neglect the channel change in the packet duration.In the prediction method, we first estimate the channel using the last two successive uplink ACK packets. The channel is linearly extrapolated to the actual DL transmission time as shown in Fig.2, and the predicted value is given by

$$\hat{h}_{ij,k}(t_2+\tau) = h_{ij,k}(t_2) + \tau(h_{ij,k}(t_2) - h_{ij,k}(t_1))/T_f, \tag{12}$$

where τ is the time interval between the transmit weight matrix determination and the actual downlink packet transmission,

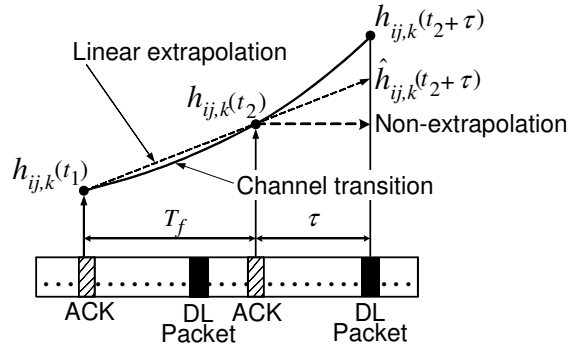

Fig. 2. Linear channel extrapolation scheme.

$h_{ij,k}(t_1)$ and $h_{ij,k}(t_2)$ are the observed channel values from the j-th TX antenna of the BS to the i-th RX antenna of the k-th MS at times t_1 and t_2, respectively.

Note that the simplest way to obtain the channel for the downlink packet is not to extrapolate the channel but to use $h_{ij,k}(t_2)$. We consider this to be the conventional method and call it the "non-extrapolation" method. According to Fig.2, the liner extrapolation method can provide more accurate channels than the non-extrapolation one.

III. Channel Measurement Setup

The measurement campaign for the multi-user MIMO system was carried out in a meeting room in a building of the Graduate School of Information Science and Technology, Hokkaido University, as shown in Fig.3. The measurement is the same as that stated in reference [20]. A similar measurement was conducted for a single-user MIMO system at the same site [19]. The walls of the room were mostly plasterboard. We also had reinforced concrete pillars, metal doors, and metal whiteboard. In the room, a 4-element TX and two 2-element RX linear arrays were placed on three tables. The TX and RX correspond to the BS and MS stated in the previous sections, respectively. The arrays consisted of omnidirectional collinear antennas. The nominal gain of these antennas on the horizontal plane was about 4 dBi. The distances from the TX to RX1 and RX2 were 4 m, while the spacing between RX1 and RX2 was 3 m. Channels were measured for all the TX and the RX antenna pairs through a vector network analyzer (VNA), as shown in Fig.4. RF switches at both the TX and the RX sides were controlled by a personal computer (PC) and selected a TX antenna and an RX antenna, respectively. Measured data were then saved on the computer. The unselected antennas were automatically connected to 50 Ω dummy loads. The measurement band was from 5.15 GHz to 5.40 GHz (bandwidth = 250 MHz), and we obtained 1,601 frequency domain data with 156.25 kHz interval. The antenna spacing (AS) was 3 cm (half-wavelength at 5 GHz), and two array orientations along the x- and the y-axes, called TX-x/RX-x and TX-y/RX-y, were examined as shown in Fig.5. When there were no metal partitions between the TX and RXs, we had a LOS environment, as shown

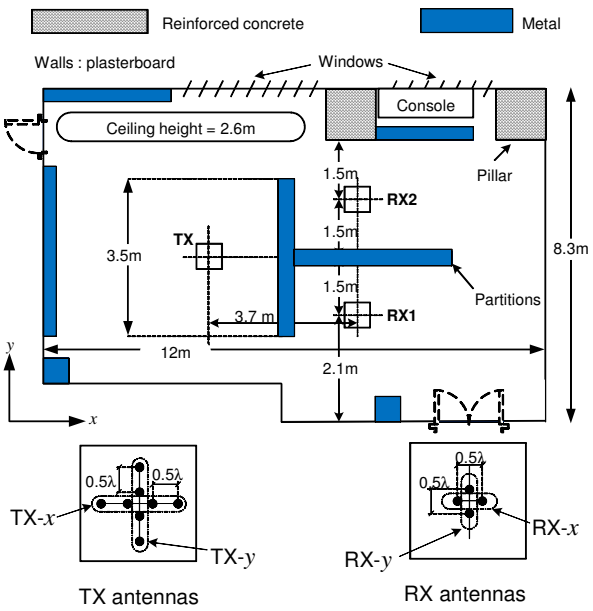

Fig. 3. Measurement site (top view).

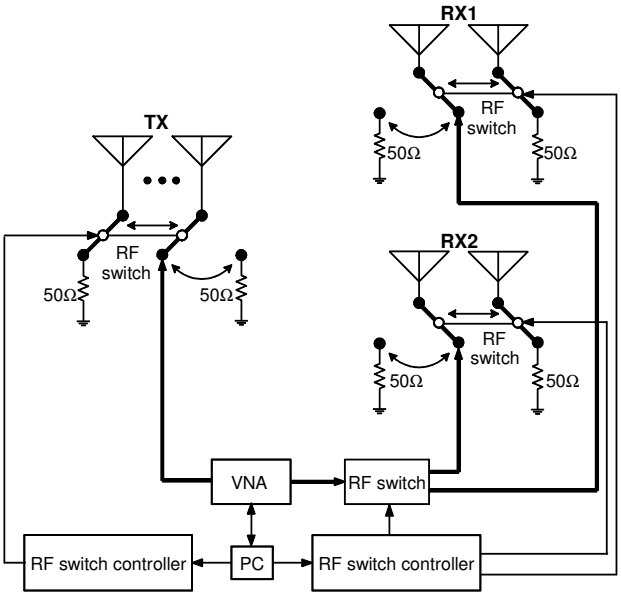

Fig. 4. Channel measurement system.

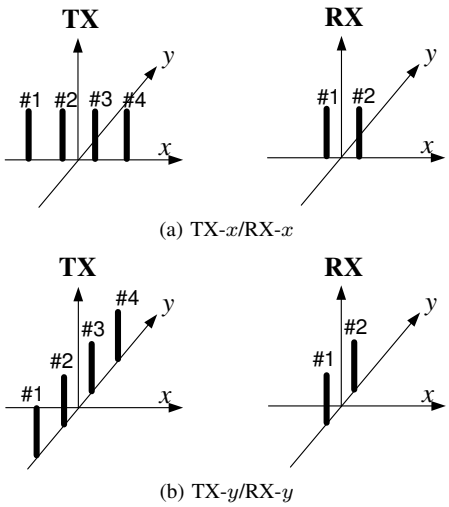

Fig. 5. Array orientations.

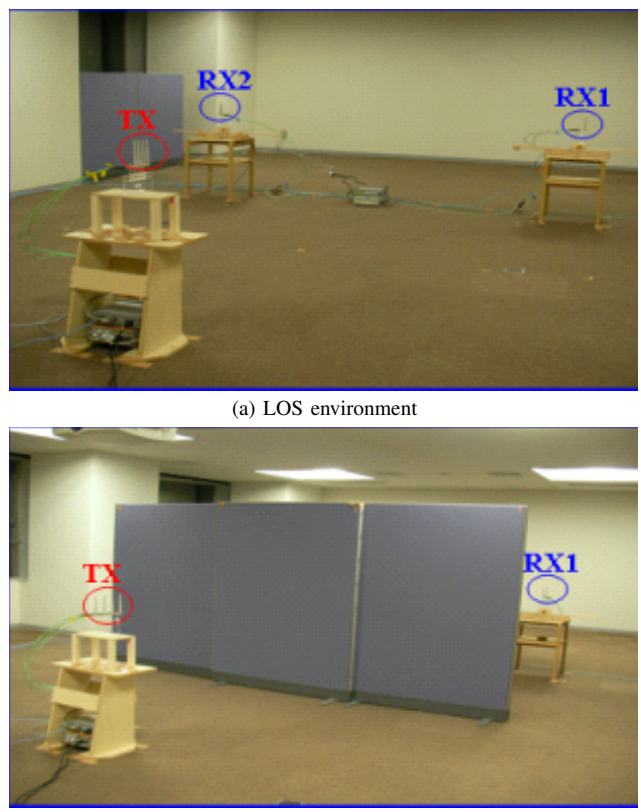

(a) LOS environment

(b) NLOS environment

Fig. 6. Measurement environments.

in Fig.6(a). When there were partitions, we had a non-LOS (NLOS) one, as shown in Fig.6(b).

On the RX side, two stepping motors were used to move the two RX arrays along the x- or y-axis during the experiments. These motors were controlled by a personal computer. Each step of the motors corresponds to 0.0088 cm, and the RX arrays were stopped at every 10 steps (equal to 0.088 cm). The channels were measured at intervals of 0.088 cm, and we had a total of 500 spatial measurement points. As a result, 1,601$\times$500 = 800,500 channel response matrices were obtained for each case of the direction of the RX motion, the array orientation, and the LOS/NLOS condition. The large amount of channel data was measured to examine reliable BER performance. Note that the measurement campaign was conducted while no one was in the room to ensure statistical stationarity of propagation.

IV. Transitions And Predictions Of Channel

In this section, using the measured channel data, we investigate the behavior of channel transitions and predictions. As stated in the previous section, the channels were measured at intervals of 0.088 cm. That is, we obtained channels as a function of location. We can transform them into channel data

as a function of time with a parameter of a maximum Doppler frequency. We assume that a mobile terminal is moving at a constant velocity v. With a time interval Δt, the distance Δz that the mobile terminal has moved is given by

$$\Delta z = v\Delta t. \tag{13}$$

The maximum Doppler frequency f_{D} occurring during the mobile terminal's motion is as follows:

$$f_{\mathrm{D}} = v f_c / c = \Delta z / \lambda \Delta t, \tag{14}$$

where f_c, c, and λ denote the carrier frequency, the speed of light, and the wavelength, respectively.

Assuming that the time interval between the adjacent measurement points (Δz = 0.088 cm) was 0.5 ms (Δt = 0.5 ms), then from (14), we had f_{D} = 31Hz, where the carrier frequency was assumed to be the center of the measurement band (f_c = 5.275 GHz). That is, the channel data at the measurement points can be considered to be the data as a function of time at intervals of 0.5 ms with f_{D} = 31Hz.

Figs. 7 and 8 show examples of channel transitions for conditions described in the figure captions. They are the channel between the TX antenna #1 and RX antenna #1 for the RX2. The amplitudes in the figurers were normalized to the amplitude for the single-user single-input single output (SISO) LOS measurement in an anechoic chamber, with the distance of 4 m between the TX and RX sides. The channels are seen to change significantly during the interval of only 1 ms or 2 ms for f_{D} = 31Hz. The time interval of 1 ms corresponds to the location interval of only 0.176 cm or 0.03 wavelengths for f_{D} = 31Hz. That is, channels vary very rapidly in multipath-rich environments.

Next, we consider the liner channel prediction stated in Section II. In the remainder of this paper, we assume the frame duration T_f of 2 ms, as in the HIPERLAN/2 standard. The linearly extrapolated channels are also drawn in the figures. In this case, $t_1 = -T_f = -2$ ms and t_2 = 0 ms hold. We can see that the predicted channels track the actual ones well. The prediction scheme improves the multi-user MIMO system performance as will be described in the next section.

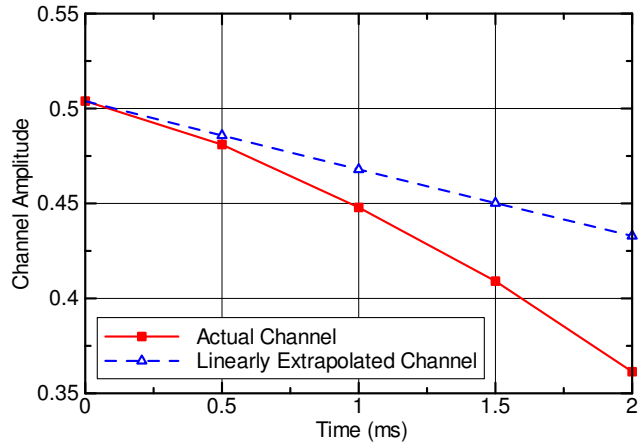

(a) Amplitude

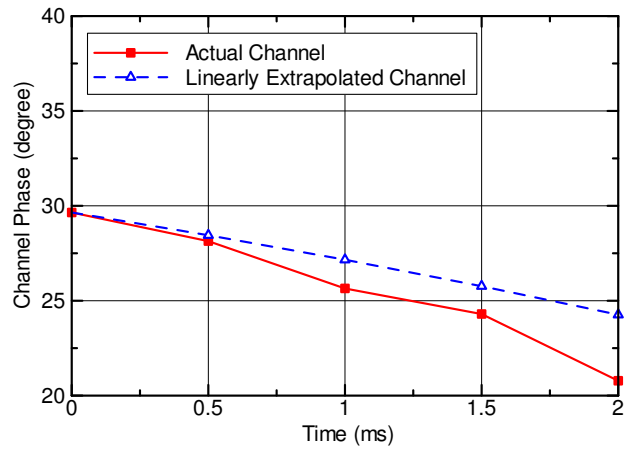

(b) Phase

Fig. 7. Channel transition and linear prediction (1). TX-x/RX-x, NLOS, RX2, $h_{11,2}(t)$, RX motion along x-axis, f_D = 31 Hz.

V. BER Performance Of Multi-User MIMO Systems

Using the measured channel data, we conducted simulations of multi-user MIMO E-SDM transmission and obtained the BER performance. In this section, we describe the effect of the channel prediction scheme in the indoor time-varying environments. We assumed frequency-flat fading channels. Table I lists simulation parameters. The data rate for each MS was fixed constantly at 4 bps/Hz (bits per symbol duration). Because the TX had four antennas and each RX had two antennas, we had either single-stream or two-stream transmission for each RX. The modulation scheme was either 16QAM for the single-stream transmission or QPSK for the two-stream one. The resource control, namely determining the number of streams, modulation scheme, and transmit power, was done in such a way that the Chernoff upper bound of BER of each MS had the lowest value [10]. The total transmit power per MS was assumed to be equal. In this study, we focused on the effect of the compensation for time-varying MIMO channels using the linear extrapolation scheme. Thus, the uplink channels were assumed to be estimated perfectly at the TX using the ACK packets, and the effective downlink channels for the E-SDM transmission were also assumed to be estimated perfectly at both RXs. In addition to the above, we assumed that there is neither an analogue circuit impairment nor a signal processing one such as a quantization error.

Fig.9 shows the average BER performance of RX2 versus normalized TX power for NLOS cases. The normalized TX power is the TX power per MS normalized to the power yielding average E_s/N_0 of 0 dB in the case of the single-user SISO-LOS measurement in an anechoic chamber stated in the previous section. Here, E_s is received signal energy per symbol, and N_0 is noise power density. The BER performance was examined for different maximum Doppler frequencies. The ideal case in the figures shows the behavior for the maximum Doppler frequency of 0 Hz. We do not have channel changes in the ideal case. As indicated in Table I, all the curves are for the delay τ of 1 ms from the ACK packet. That is, we had a 1 ms interval between the determination of TX parameters including the weights and the actual data

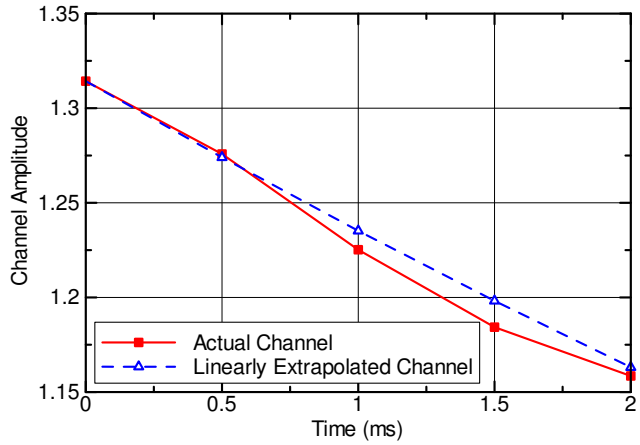

(a) Amplitude

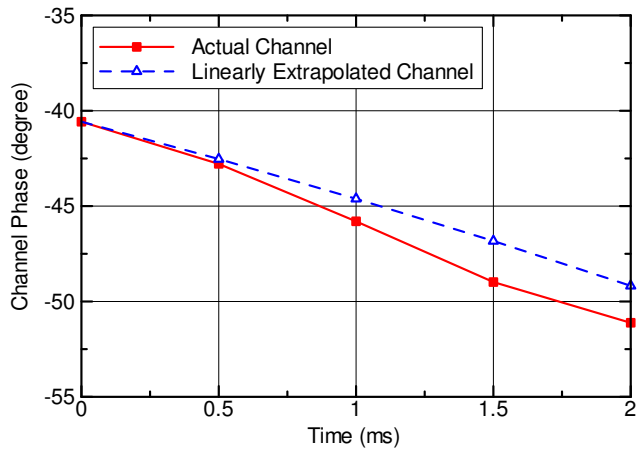

(b) Phase

Fig. 8. Channel transition and linear prediction (2). TX-y/RX-y, LOS, RX2, $h_{11,2}(t)$, RX motion along y-axis, f_D = 31 Hz.

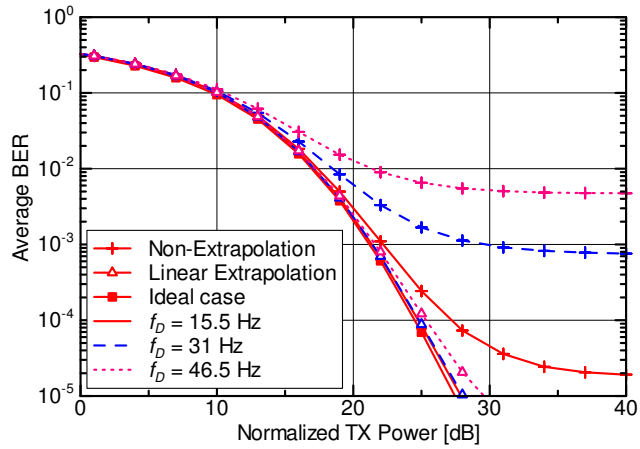

(a) TX-x/RX-x

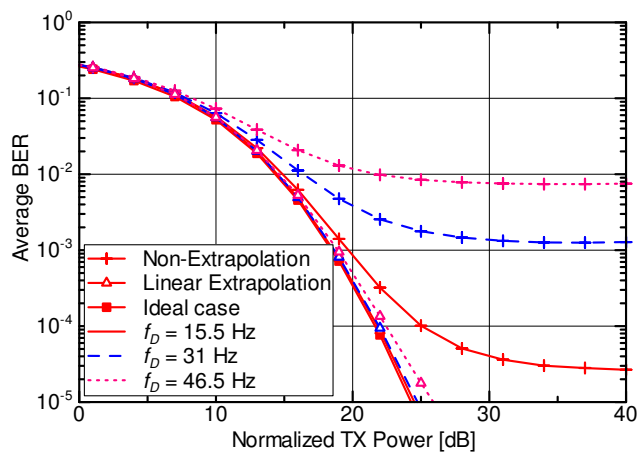

(b) TX-y/RX-y

Fig. 9. BER performance of multi-user MIMO systems for RX2 in NLOS environments. RX motion along x-axis.

TABLE I
SIMULATION PARAMETERS.

No. of MSs	2
No. of TX & RX antennas	4×2
Data rate for each MS	4 bits/symbol
Modulation schemes	QPSK, 16QAM
Resorce control	Minimum BER criterion based on Chernoff upper bound [10]
Data burst length	128 symbols
Frame duration (T_{f})	2 ms
Delay from ACK (τ)	1 ms
Max. Doppler frequency (f_{D})	15.5, 31, 46.5 Hz
Channels	Estimated perfectly at TX, RX1 and RX2
Thermal noise	Additive white Gaussian noise
RX signal processing	MMSE weight

transmission. The figures show that when we do not use the channel prediction scheme, we have error floors the curves of which are denoted by "Non-extrapolation". This means that if we use the outdated channels when the ACK packet is received, we have poor BER performance. The travel distances during 1 ms for f_{D} = 15.5, 31, and 45.6 Hz correspond to about 0.015, 0.03, and 0.045 wavelengths, respectively. Only a fraction of channel transition significantly affects the BER performance even though the RX weights are determined by the MMSE criterion using the CSI without delay. On the other hand, when we use the channel prediction scheme denoted by "Linear-extrapolation" in the figures, the error floor disappears, and the BER performance is improved almost to that in the ideal case.

As stated in Section II, when the TX uses two-stream transmission to at least one RX, the interference cannot be suppressed because the RX has only two antennas. Table II shows the percentage of streams for the maximum Doppler frequency of 31 Hz and the normalized TX power of 30 dB. Two-stream transmission to at least one RX ranges from 23 % to 31 %. This was considered to seriously degrade BER performance when the channel prediction method was not used.

Fig.10 shows the BER performance for LOS cases. Compared to the NLOS cases shown in Fig.9, the BER without the channel prediction largely depends on the array orientation. The BER performance for the TX-y/RX-y is much better than that for the TX-x/RX-x. As discussed in detail in reference [20], this is because higher received power was obtained with

TABLE II
PERCENTAGE OF STREAMS IN NLOS ENVIRONMENTS. RX MOTION ALONG x-AXIS, f_D = 31 HZ, NORMALIZED TX POWER OF 30 dB.

(a) TX-x/RX-x

	Non-extrapolation	Linear extrapolation
RX1 – 1 stream RX2 – 1 stream	76.4 %	76.6 %
RX1 – 1 stream RX2 – 2 streams	12.5 %	12.3 %
RX1 – 2 streams RX2 – 1 stream	8.4 %	8.5 %
RX1 – 2 streams RX2 – 2 streams	2.7 %	2.6 %

(b) TX-y/RX-y

	Non-extrapolation	Linear extrapolation
RX1 – 1 stream RX2 – 1 stream	69.0 %	69.5 %
RX1 – 1 stream RX2 – 2 streams	10.9 %	10.8 %
RX1 – 2 streams RX2 – 1 stream	14.8 %	14.7 %
RX1 – 2 streams RX2 – 2 streams	5.3 %	5.0 %

TABLE III
PERCENTAGE OF STREAMS IN LOS ENVIRONMENTS. RX MOTION ALONG y-AXIS, f_D = 31 HZ, NORMALIZED TX POWER OF 30 dB.

(a) TX-x/RX-x

	Non-extrapolation	Linear extrapolation
RX1 – 1 stream RX2 – 1 stream	76.0 %	75.8 %
RX1 – 1 stream RX2 – 2 streams	10.6 %	10.5 %
RX1 – 2 streams RX2 – 1 stream	10.2 %	10.5 %
RX1 – 2 streams RX2 – 2 streams	3.2 %	3.2 %

(b) TX-y/RX-y

	Non-extrapolation	Linear extrapolation
RX1 – 1 stream RX2 – 1 stream	87.1 %	86.8 %
RX1 – 1 stream RX2 – 2 streams	8.3 %	8.6 %
RX1 – 2 streams RX2 – 1 stream	4.3 %	4.3 %
RX1 – 2 streams RX2 – 2 streams	0.3 %	0.3 %

the TX-y/RX-y orientation due to the mutual coupling between antennas. It is seen that when the channel prediction scheme is used, the BER performance is improved almost to that in the ideal case for both array orientations.

Table III shows the percentage of streams for the LOS cases. We can see that the single-stream transmission to each RX accounts for nearly 90 % of the MIMO communicatons in the LOS TX-y/RX-y case. That is, the single-stream transmission was dominant in this condition. Also, the percentage of the

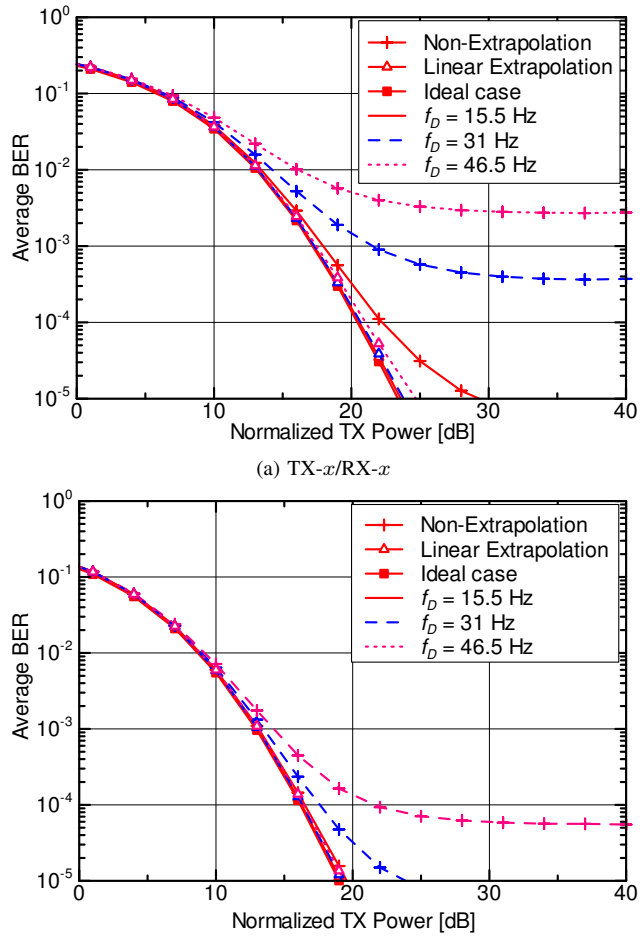

(a) TX-x/RX-x

(b) TX-y/RX-y

Fig. 10. BER performance of multi-user MIMO systems for RX2 in LOS environments. RX motion along y-axis.

two-stream transmission to both RXs is 0.3 % in this case, which is a much lower value than those in the other cases. It is conjectured that these resource allocations reduced the degradation due to the interference and improved the BER performance.

The maximum Doppler frequencies of 15.5 Hz, 31 Hz, and 46.5 Hz correspond to the velocities of 0.88 m/s, 1.76 m/s, and 2.64 m/s for the center of the measurement band of 5.275 GHz, respectively. These values are walking velocities, which are reasonable in indoor environments. As stated previously, we assumed that τ is 1 ms, which is also reasonable for a TDD system such as HIPERLAN/2 standard. Thus, we can say that the linear channel prediction scheme is effective for the TDD system in indoor environments. For faster fading in outdoor environments, we will need more sophisticated channel prediction schemes.

VI. CONCLUSIONS

We have investigated the channel prediction scheme for the multi-user MIMO system using the measured channel data. The measurement campaign was carried out at the 5.2 GHz frequency band in indoor environments. The channel changes significantly with only a fraction of transitions such as

0.03 wavelengths, and the small channel transition seriously degrades BER performance. In the LOS case, the behavior depends on the array orientation due to the effect of mutual coupling. We have shown that the channel prediction based on the simple linear extrapolation can track the actual channel and that the BER performance is improved in all scenarios almost to that in the ideal time invariant case.

In this paper, we assumed perfect channel estimation at both of the TX and RX sides. Erroneous channel prediction due to the channel estimation error at the TX will increase IUI and IStI, and will degrade the resource control. The channel estimation error at the RX causes erroneous RX weight determination. Considerations on the performance degradation due to the channel estimation error are our future work.

Acknowledgment

H. P. Bui would like to thank Vietnam National Foundation for Science and Technology Development (NAFOSTED) for their support under research grant number 102.02-2011.23.

References

[1] E. Telatar, "Capacity of multi-antenna Gaussian channels," European Transaction on Telecommunications, vol. 10, no. 6, pp. 585–589, Nov./Dec. 1999.

[2] A. J. Paulraj, D. A. Gore, R. U. Nabar, and H. Bölcskei, "An overview of MIMO communications — A Key to gigabit wireless," Proc. IEEE, vol. 92, no. 2, pp. 198–218, Feb. 2004.

[3] D. Gesbert, M. Kountouris, R. W. Heath Jr., C. B. Chae, and T. Sälzer, "Shifting the MIMO paradigm," IEEE Signal Processing Mag., vol. 24, no. 5, pp. 36–46, Sept. 2007.

[4] G. Bauch, J. B. Anderson, C. Guthy, M. Herdin, J. Nielsen, J. A. Nossek, P. Tejera, and W. Utschick, "Multiuser MIMO channel measurements and performance in a large office environment," Proc. IEEE Wireless Comm. and Net. Conf. (WCNC2007), pp. 1902–1907, Mar. 2007.

[5] J. Koivunen, P. Almers, V.-M. Kolmonen, J. Salmi, A. Richter, F. Tufvesson, P. Suvikunnas, A. F. Molisch, and P. Vainikainen, "Dynamic multilink indoor MIMO measurements at 5.3 GHz," Proc. 2nd European Conference on Antennas and Propagation (EuCAP 2007), Nov. 2007.

[6] F. Kaltenberger, M. Kountouris, D. Gesbert, and R. Knopp, "On the trade-off between feedback and capacity in measured MU-MIMO channels," IEEE Trans. Wireless Commun., vol. 8, no. 9, pp. 4866–4875, Sept. 2009.

[7] L. U. Choi and R. D. Murch, "A transmit preprocessing technique for multiuser MIMO systems using a decomposition approach," IEEE Trans. Wireless Commun., vol. 3, no. 1, pp. 20–24, Jan. 2004.

[8] Q. H. Spencer, A. L. Swindlehurst, and M. Haardt, "Zero-forcing methods for downlink spatial multiplexing in multiuser MIMO channels," IEEE Trans. Signal Processing, vol. 52, no. 2, pp. 461–471, Feb. 2004.

[9] Q. H. Spencer, C. B. Peel, A. L. Swindlehurst, and M. Haardt, "An introduction to the multi-user MIMO downlink," IEEE Commun. Mag., pp. 60–67, Oct. 2004.

[10] K. Miyashita, T. Nishimura, T. Ohgane, Y. Ogawa, Y. Takatori, and K. Cho, "High data-rate transmission with eigenbeam-space division multiplexing (E-SDM) in a MIMO channel," Proc. IEEE VTC 2002-Fall, vol. 3, pp. 1302–1306, Sept. 2002.

[11] G. Lebrun, J. Gao, and M. Faulkner, "MIMO transmission over a time-varying channel using SVD," IEEE Trans. Wireless Commun., vol. 4, no. 2, pp. 757–764, Mar. 2005.

[12] S. H. Ting, K. Sakaguchi, and K. Araki, "A robust and low complexity adaptive algorithm for MIMO eigenmode transmission system with experimental validation," IEEE Trans. Wireless Commun., vol. 5, no. 7, pp. 1775–1784, July 2006.

[13] K. Huang, R. W. Heath, Jr., and J. G. Andrews, "Limited feedback beamforming over temporally-correlated channels," IEEE Trans. Signal Processing, vol. 57, no. 5, pp. 1959–1975, May 2009.

[14] J. W. Wallace and M. A. Jensen, "Time-varying MIMO channels: Measurement, analysis, and modeling," IEEE Trans. Antennas and Propagat., vol. 54, no. 11, pp. 3265–3273, Nov. 2006.

[15] R. C. Daniels, K. Mandke, K. Truong, S. Nettles, and R. W. Heath, Jr., "Throughput and delay measurements of limited feedback beamforming for indoor wireless networks," Proc. IEEE GLOBECOM 2008, pp. 4593–4598, Nov./Dec. 2008.

[16] D. Sacristán-Murga, F. Kaltenberger, A, Pascual-Iserte, and A. I. Pérez-Neira, "Differential feedback in MIMO communications: Performance with delay and real channel measurements," Proc. International ITG Workshop on Smart Antennas (WSA'09), Feb. 2009.

[17] A. L. Anderson, J. R. Zeidler, and M. A. Jensen, "Stable transmission in the time-varying MIMO broadcast channel," EURASIP Journal on Advances in Signal Processing, vol. 2008, Article ID 617020, 14 pages, 2008. doi:10.1155/2008/617020.

[18] A. L. Anderson, J. R. Zeidler, and M. A. Jensen, "Reduced-feedback linear precoding with stable performance for the time-varying MIMO broadcast channel," IEEE J. Selected Areas Commun., vol. 26, no. 8, pp. 1483–1493, Oct. 2008.

[19] H. P. Bui, H. Nishimoto, Y. Ogawa, T. Nishimura, and T. Ohgane, "Channel characteristics and performance of MIMO E-SDM systems in an indoor time-varying fading environment," EURASIP Jornal on Wireless Communications and Networking, vol. 2010, Article ID 736962, 14pages, 2010. doi: 10.1155/2010/736962.

[20] H. P. Bui, Y. Ogawa, T. Nishimura, and T. Ohgane, "Measurement-based evaluation of a multiuser MIMO system in an indoor time-varying environment," Proc. IEEE VTC 2010-Fall, Sept. 2010.

[21] J. B. Andersen, J. Jensen, S. H. Jensen, and F. Frederiksen, "Prediction of future fading based on past measurements," Proc. IEEE VTC 1999-Fall, vol. 1, pp. 151–155, Sept. 1999.

[22] K. Kobayashi, T. Ohtsuki, and T. Kaneko, "MIMO systems in the presence of feedback delay," Proc. ICC2006, vol. 9, pp. 4102–4106, Jun. 2006.

[23] Alexandra Duel-Hallen, "Fading channel prediction for mobile radio adaptive transmission systems," Proc. IEEE, vol. 95, pp. 2299–2313, Dec. 2007.

[24] H. P. Bui, H. Nishimoto, T. Nishimura, Y. Ogawa, and T. Ohgane, "On the performance of MIMO E-SDM systems with channel prediction in indoor time-varying fading environments," Proc. 2007 IEEE AP-S International Symposium, pp. 209–212, June 2007.

[25] H. P. Bui, Y. Ogawa, T. Nishimura, and T. Ohgane, "Multiuser MIMO E-SDM systems: Performance evaluation and improvement in time-varying fading environments," Proc. IEEE GLOBECOM2008, Nov./Dec. 2008.

[26] H. P. Bui, Y. Ogawa, T. Nishimura, and T. Ohgane, "Multi-user MIMO system with channel prediction for time-varying environments," Proc. 2011 IEEE AP-S International Symposium, pp. 59–62, July 2011.

[27] A. Doufexi, S. Armour, M. Butler, A. Nix, D. Bull, J. McGeehan, and P. Karlsson, "A comparison of the HIPERLAN/2 and IEEE 802.11a wireless LAN standards," IEEE Commun. Mag., vol. 40, no. 5, pp. 172–180, May 2002.

[28] D. Astély, E. Dahlman, A. Furuskär, Y. Jading, M. Lindström, and S. Parkvall, "LTE: The evolution of mobile broadband," IEEE Commun. Mag., vol. 47, no. 4, pp. 44–51, Apr. 2009.

[29] Kamran Etemad, "Overview of mobile WiMAX technology and evolution," IEEE Commun. Mag., vol. 46, no. 10, pp. 31–40, Oct. 2008.

Huu Phu Bui received B.S., M.S. degrees in electronics engineering, and Ph.D. degree in information science and technology, from Danang University, Hochiminh City University, Vietnam, and Hokkaido University, Japan, in 1997, 2002, and 2007, respectively. From 1997 to 2007, he was with Radio Frequency Directorate, Ministry of Information and Communications, Vietnam. From 2008 to 2011, he was with Hochiminh City University of Science, Vietnam. Currently, he is a Vice Director of Vietnam National Key Laboratory of Digital Control and System Engineering, Hochiminh City University of Technology. From 2007 to 2009, he was a postdoctoral researcher in Hokkaido University, Japan. His research interests are in channel prediction and signal processing for MIMO systems. He received IEEE VTS Japan Chapter Young Researcher's Encouragement Award in 2006.

Yasutaka Ogawa received the B.E., M.E. and Ph.D. degrees from Hokkaido University, Sapporo, Japan, in 1973, 1975, and 1978, respectively. Since 1979, he has been with Hokkaido University, where he is currently a professor of the Graduate School of Information Science and Technology. During 1992-1993, he was with ElectroScience Laboratory, the Ohio State University, U.S.A., as a visiting scholar, on leave from Hokkaido University. His professional expertise encompasses super-resolution estimation techniques, applications of adaptive antennas for mobile communication, multiple-input multiple-output (MIMO) techniques, and measurement techniques. He proposed a basic and important technique for time-domain super-resolution estimation for electromagnetic wave measurement such as antenna gain measurement, scattering/diffraction measurement, and radar imaging. Also, his expertise and commitment to advancing the development of adaptive antennas contributed to the realization of space division multiple accesses (SDMA) in the Personal Handy-phone System (PHS). He received the Yasujiro Niwa outstanding paper award in 1978, the young researchers' award of Institute of Electronics, Information and Communication Engineers of Japan (IEICE) in 1982, the best paper award from IEICE in 2007, TELECOM system technology award from the Telecommunications Advancement Foundation of Japan in 2008, and the best magazine paper award in 2011 from IEICE Communications Society. He also received the Hokkaido University Commendation for excellent teaching in 2012. He is a Fellow of IEICE.

Toshihiko Nishimura received the B.S. and M.S. degrees in physics and Ph.D. degree in electronics engineering from Hokkaido University, Sapporo, Japan, in 1992, 1994, and 1997, respectively. In 1998, he joined the Graduate School of Information Science and Technology at Hokkaido University, where he is currently an Assistant Professor of the Graduate School of Information Science and Technology. His current research interests are in MIMO systems using smart antenna techniques. Dr. Nishimura received the Young Researchers' Award of IEICE Japan in 2000, the Best Paper Award from IEICE Japan in 2007, and TELECOM System Technology Award from The Telecommunications Advancement Foundation of Japan in 2008, and the best magazine paper award in 2011 from IEICE Communications Society.

Takeo Ohgane received the B.E., M.E., and Ph.D. degrees in electronics engineering from Hokkaido University, Sapporo, Japan, in 1984, 1986, and 1994, respectively. From 1986 to 1992, he was with Communications Research Laboratory, Ministry of Posts and Telecommunications. From 1992 to 1995, he was on assignment at ATR Optical and Radio Communications Research Laboratory. Since 1995, he has been with Hokkaido University, where he is an Associate Professor. During 2005–2006, he was at Centre for Communications Research, University of Bristol, U.K., as a Visiting Fellow. His interests are in MIMO signal processing for wireless communications. Dr. Ohgane received the IEEE AP-S Tokyo Chapter Young Engineer Award in 1993, the Young Researchers' Award of IEICE Japan in 1990, the Best Paper Award from IEICE Japan in 2007, TELECOM System Technology Award from The Telecommunications Advancement Foundation of Japan in 2008, and the best magazine paper award in 2011 from IEICE Communications Society.