THE DEVELOPMENT OF WEB-BASED INTEGRATING MANAGEMENT INFORMATION SYSTEM IN CONSTRUCTION LAB.

WENG-FONG CHEUNG [1*] YU-CHENG LIN [2†]

[1] *Ph.D. Student, Department of Civil Engineering, National Taipei University of Technology, Taiwan.*
[2] *Associate professor, Department of Civil Engineering, National Taipei University of Technology, Taiwan.*

ABSTRACT

Information Management always plays an important role in construction management. There are numerous tests processed in construction material labs. Every test result will be an important information for construction quality management. The accuracy and efficiency are the main concern in construction lab, however, existing paper-based information management in labs system is considered inefficient since the test information of the test phase is single and no integration. Integrating promising information technologies such as web-based technology and web portals can help improve the effectiveness and convenience. This study demonstrates the effectiveness of a Web-based Labs Information Management application called the Web-based Construction Labs Information Management (WCLIM) system in construction material labs, demonstrating that it responds efficiently and enhances the information flow and resource management in test progress in a construction labs environment. The WCLIM system is then applied to a case study involving in Taipei MRT Labs to verify the proposed methodology and demonstrate the effectiveness of automatic information integration in the construction material labs. The advantage of the WCLIM system lies not only in improving work efficiency and accuracy for test, but also in providing dynamic test progress track and on-line service for construction quality management.

Keywords: Information Management System; Construction Lab; Quality Management; Web-based.

1. INTRODUCTION

The qualities of construction materials contribute to the structure performance, construction lab plays an important role in quality test and management (QTM) during construction project. Various test information should be generated and submit to the construction site timely for quality confirmation and control, therefore Information technology (IT) plays a significant role in controlling and managing quality test. To satisfy the management and technical requirements purpose of ISO-17025 standard (General requirements for the competence of testing and calibration laboratories), a construction lab system usually consists several categories including management

[*] Presenter: Email: weng-fong@hotmail.com

[†] Corresponding author: Email: weng-fong@hotmail.com

system, control of data, document control, instruments maintenance and calibration,…, etc. The proposed information system should assist construction lab to achieve the requirement of standard (see Fig. 1).

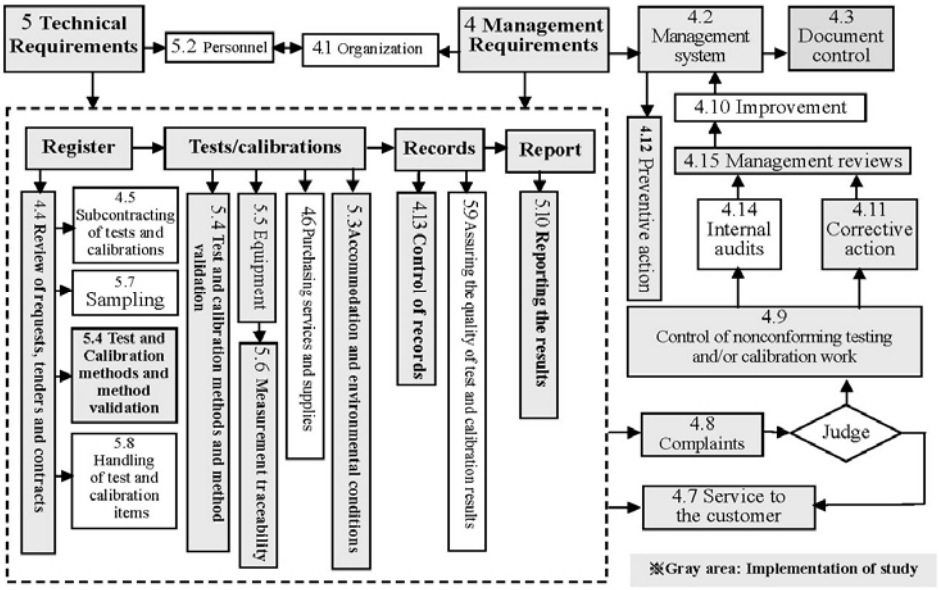

Figure 1: ISO/IEC 17025 Laboratory Management Structure (TAF, 2006)

A test usually consist several complex processes, an accurate test report contributed from the well-calibrated instrument and test technologies. A complete material test usually includes several sub-tests. Data generated from different test systems is extremely difficult to collect because most systems do not facilitate seamless information exchange with other system. The problems summarized from the lab investigation were as follows：(1)Lab staffs and managers use paper-based documents or sheet, consequently, that makes much heavily manual work and information was hard to be integrated. (2)The data input and calculation of human usually makes mistakes. (3)The documents were not easy to control, staff usually use pre-printed outdated version documents. (4)The test process was not easy to control, without any alert mechanisms to prevent the test delay. (5)Instruments conditions were not easy to manage and control. Test staffs hard to realize the instruments status. (6)The communicating with customers by telephone or mail is inefficiency and inconvenient. The proposed system will try to solve the above mentioned problems.

With the advent of the IT technology, this study develops a Web-based Construction Labs Information Management system (WCLIM), which improves the acquisition and integration of quality test data, enhances the instruments management and speed up the report production and accuracy. The main objectives in this study are as follows: (1)To develop a web-based portal for construction lab management, all test-relative information can be communicated from the portal. (2) To collect the different instrument system data and integrate all lab information by systemic database then generates test reports automatically. (3)Build instrument management system to control the maintenance and calibration. (4)To provide the electric test report service and customer feedback system.

2. LITERATYRE REVIEW

The application of Information Technology can improve the workflow and operation efficiency, over the last ten years, numerous academic studies of web technologies have been applied to project management in the construction industry. Lam and Ng (2006) developed a web-based quality management system as an effective tool for gathering, filtering, managing, accessing, and sharing data at project and corporate levels. Ng et al. (2003) created a web-based centralized multi-client cooperative contractor registration system to enhance contractor qualification and registration practices. Kong et al. (2004) developed system integrated web technology for information sharing between construction material e-commerce systems. Cheung et al. (2004) generated a web-based construction project performance monitoring system to assist project managers in project control. Cheung (2010) developed a construction lab management system utilized instrument automation and network technology.

3. SYSTEM DEVELOPMENT

3.1. System Analysis

System analysis was the necessary procedure for developing advanced information system (Gary et al. 2007), for understanding the work flow, IDEF0 (Integration Definition for Function Modeling) method was adopted to analysis the lab activities. IDEF0 (NIST,1993) is a function modeling methodology for describing manufacturing system (Ang et al. 1999), which was invented by U.S Air force since 1970. The IDEF0 method decomposes each activity to hierarchical series of diagrams that describes the input, output, controls and mechanism details. We interviewed the lab relative persons and analyzed the construction lab work process, information flow, users' requirement …etc, then to figure out the system required modules and database (See Fig. 2).

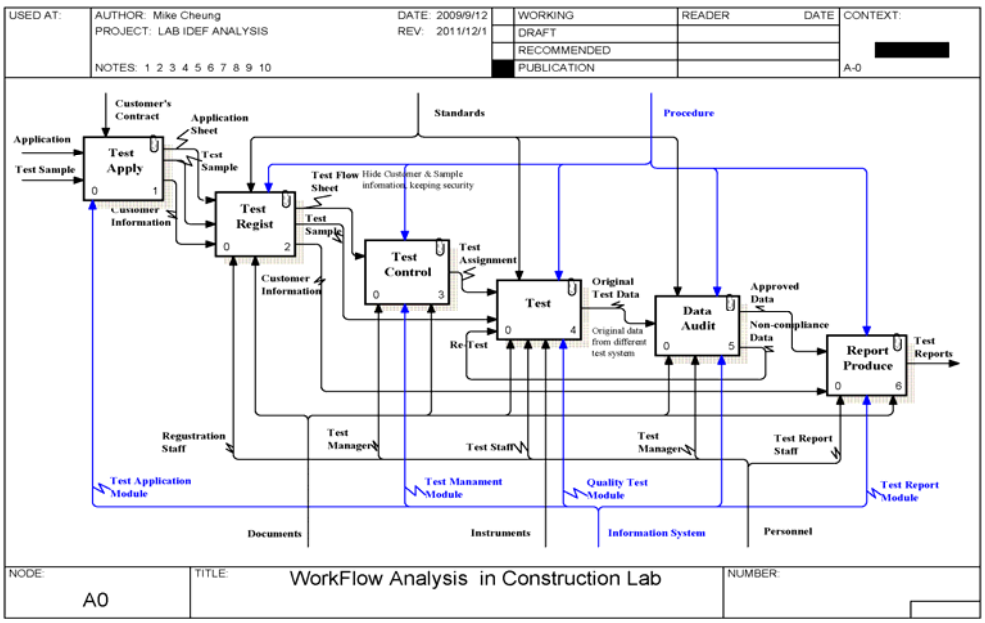

Figure 2: IDEF0 Analysis of construction Lab

3.2. System Architecture

The WCLIM contains two main categories that developed by different application system , the one was to build web-based information system and website that integrates the lab management and workflow , the other was to built the interface program for data acquisition from the different test instrument system (See Fig. 3).

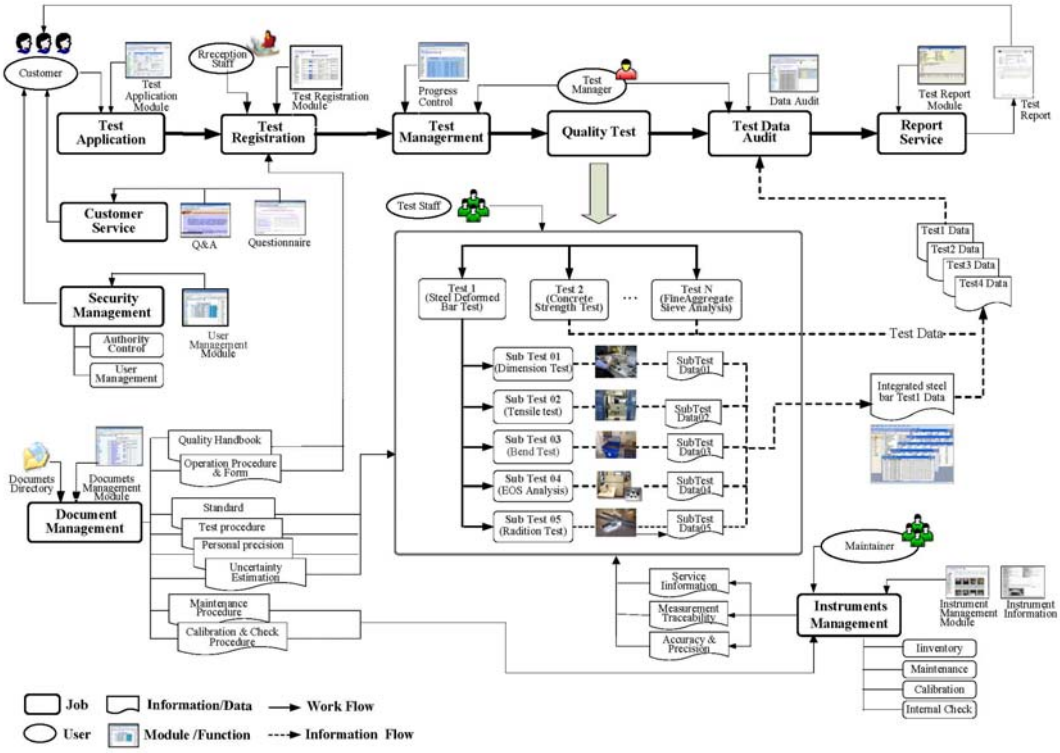

Figure 3: Integration work flow of Construction Lab

The Web-based Lab information System was developed for progress control and information integration, which was based on the Microsoft Windows server 2008 operation system with Internet Information Server (IIS) as the web server. The interface program for data acquisition from different instrument which developed with VB.Net programming acquires the data from different instrument built-in system directly. Tables1 describes the developed WCLIN system modules.

Table 1: Modules of WCLIM

	Modules	Description	Users
1	Test application Module	Provides customers to apply the test application service directly from internet	Customers
2	Test registration Module:	Handle the registration work, staff only confirm the imputed application and test sample, much improving the efficiency.	Registration staff
3	Quality Test Module	Acquire data from instruments, collect data from different test system, automatic calculation of test results and store into database.	Test staff
4	Test Management Module	Control test progress , test result audit, delay alert	Test manager

5	Instruments Management Module	Maintenance and inventory, calibration and intermediate check, confide the accuracy and precision of instruments	Instruments manager
6	Document Management Module	Announce and update new version document, eliminate the outdated and invalid document	Managers & staff
7	Test Report Module	Integration of test flow information, automatically calculate and generate the test report. Enhance the efficiency and accuracy of test report	Report staff
8	Customer Service Management Module	Provide customer the electric report service, feedback and questionnaire function. Collect satisfaction information for lab service improvement.	Customers and manager

4. CASE STUDY

The case study utilizes the WCLIM in a city government construction lab in Taiwan. The test choice steel deformed bars quality test as the implementation object. The steel bar tests involves several sub-tests including dimension check (spacing, height and gap of deformation), tensile and yield strength, chemical composition analysis by Optical Emission Spectrometer and radiation test. There are about 80 data fields conducted for recording the test procedure and sample information and 152 for the above mentioned tests. The process phases describe as follows (See Fig. 4).

4.1. Registration Phase

The customer makes the test reservation by system via internet, the relevant applied information including customer, test items, date and samples…etc., were ask to input and be collected. Customer can choice the paper form or electric test report service. When the steel bars samples were delivered to lab, all information will be transferred for application usage after confirmation.

4.2. Application Phase

When the steel bars were delivered to the lab, the staff can only confirm the pre-registered information and test sample. The application process can be finished in short time and much eliminated the customers waiting time.

4.3. Test Phase

During the test phase, several sub-tests will be executed by different test and instrument for confirming steel bar characters. The dimension data (deformations of spacing (30), height (60) and gap(20)) were measured from digital vernier caliper, the mechanical test data (tensile, yield strength) from hydraulic test machine, the chemical composition data from emission optical spectrometer, the radiation data from radiation detector. The test data was collected from instrument built-in system or acquired from computer port by interface program. All the collected data will be calculated and the non-compliance data with specifications will be prompted to be confirmed again. The staffs edit the description and update the progress information after test. The system will also e-mail a notice automatically if the test was delay. The manager can control whole progress from system.

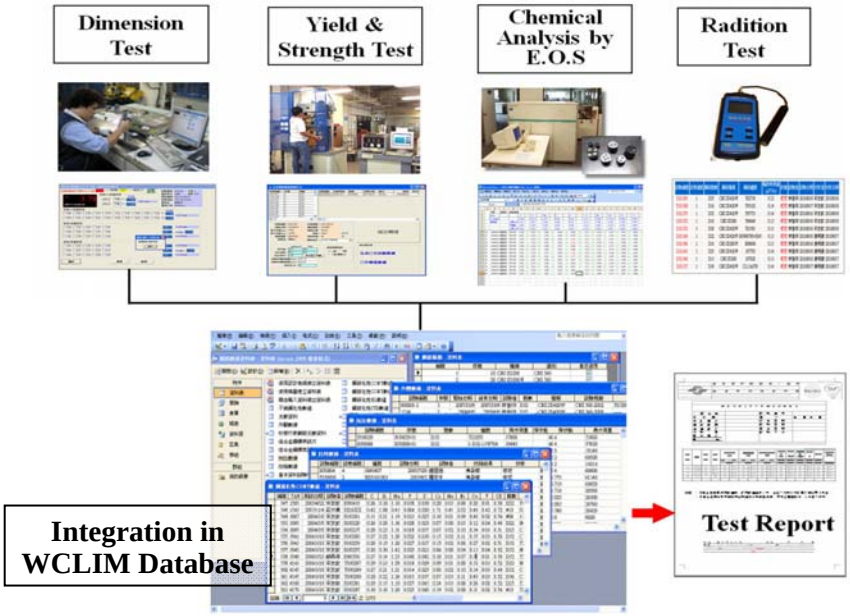

Figure 4: Automatic test report from different test system

4.4. Report and Issue Phase

When all the tests were finished and the results were checked, staffs can generate the test reports easily without further data input. The report module integrates the required data collected from test flow then generates the report automatically. The report accuracy was much improved by automatic calculation of system. The approved report will be sent to the customer by e-mail or post document.

4.5. Instruments Maintenance Phase

The instruments maintenance is an important task in construction lab management, the calibration and intermediate check can confirm the instrument in good condition and accuracy. First, all the instruments basic information was built input into the system including the items, specifications, photos, frequency of maintenance or calibration…etc. then staff can update results of maintenance or calibration in system. The relative list like inventory list or maintenance records can be collected and print momentarily. The system will also prompt the will-expired instruments item before one month and ask the task being executed (See Fig. 5).

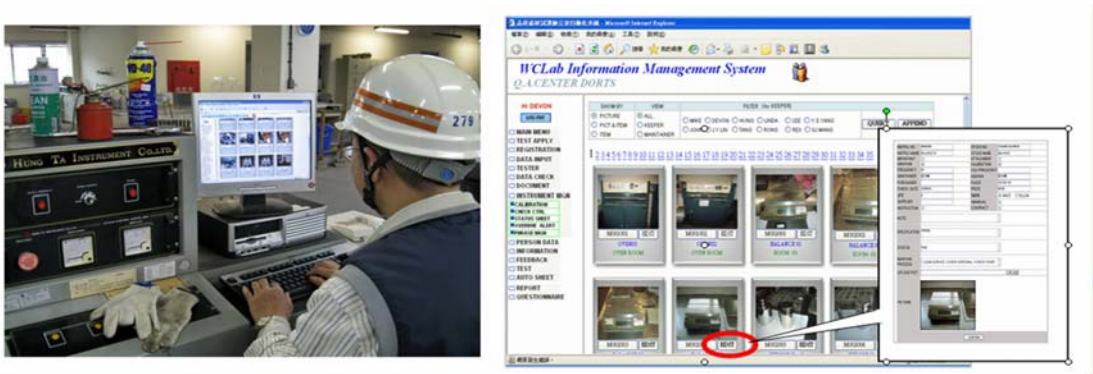

Figure 5: The instruments maintenance in the WCLIM system.

5. CONCLUSIONS AND SUGGESTION

This study proposes a web-based information system to enhance the construction lab management, instead of the original manual-paper based lab information operation. The proposed WCLIN system integrates all the lab information flow, controls work progress and enhances the instrument management and accuracy. The conclusion and suggestion describes as follows:

- The WCLIM system integrates the whole test work, provides the standard work process and workflow control. Also improves of working efficiency.
- The use of measured data transferred linked test instruments and auto-calculation functions, eliminated need for manually input and calculation, much improved the efficiency and accuracy in data processing.
- The web-based document service provides the latest updated documents anytime, staffs will no longer preserve many paper-based sheets, eliminate the version-confused problem in document control.
- The system manages the instrument information of maintenance, inventory, calibration and intermediate check. The relative operation will be prompted to execute in advance and avoid missing. The calibration or check results will be recorded as the historical information to master the instrument conditions.
- The web-based lab information system and digital test report extended the service range and much decreased the customer cost and effort in confirming the materials. The system is expected to raise customer satisfaction significantly to 80% feedback from on customer satisfaction survey.
- All of the original test raw data must be preserved for re-confirmation and avoiding doubt in future. The automatic processed data (acquirement, calculation, decimal round off) must be re-check by manual calculation, especially in critical value.
- As the test standards and procedures become huger in recent years, the full text retrieval function was suggested to add into the system for increasing the information searching speed and convenience.

6. ACKNOWLEDGMENTS

The authors would express our appreciation to Taipei Metro Rapid Transit (MRT) construction Lab for assistance in the system verification and validation, and to the staff and managers of the users of the system usage for providing useful data, valuable information, and helpful comments during system test.

REFERENCES

Ang, C. L., Khoo L. P., Gay R. K. L. (1999), IDEF: A comprehensive modeling methodology for the development of manufacturing enterprise systems, International Journal of Production Research 37(17): 3839–3858.

Cheung, S. O., Suen, C. H., and Cheung, K. W. (2004), PPMS: a Web-based Construction Project Performance Monitoring Systems, Automation in Construction, 13(2), 361-376

Cheung, W. F. (2010). The application of automation in construction material labs. Master Thesis, Department of Civil Engineering, National Taipei University of Technology, Taiwan.

Gary B. Shelly and Thomas J.Cashman and Harry J. Rosenblatt (2007), "System Analysis and Design, Course Technology ".

Kong, C. W., Li, Heng, Hung, P. L., Shi, W. Z., Daniel, C. L., and Skibniewski, Mirosaw (2004), Enabling Information Sharing Between E-Commerce Systems for Construction Material Procurement, Automation in Construction, 15(1), 84-97

Lam, Ka-Chi and Ng, S. Thomas (2006), A Cooperative Internet-Facility Quality Management Environment for Construction, Automation in Construction, 15(2), 1-11.

Ng, S. T., Palaneeswaran, E., and Kumaraswamy, M. M. (2003), Web-based Centralized Multiclient Cooperative Contractor Registration System, Journal of Computing in Civil Engineering, ASCE, 17(1), 28-37.

NIST, Integration Definition for Function Modeling (IDEF0), Federal Information Processing Standards Publications 183, 1993.

Taiwan Accreditation Foundation (2006)."Material of instruction, lab accreditation with ISO/IEC 17025 lab.", Taiwan, Author.