PROBABLISTIC ASSESSMENT OF STRAIN HARDENING RATIO EFFECT ON BRBFS RESIDUAL DRIFT DEMAND

A.Daylami[1*†], M.A.Mahdavipour[2]

[1,2]*Faculty of Civil and Environmental Engineering, Amirkabir University of Technology (Tehran Polytechnic), Iran*

ABSTRACT

As a major defect, Buckling-Restrained Braced Frames (BRBFs) have a low post-yield stiffness that leads to large residual drift concentration on a story and affects the serviceability performance of structures after earthquakes. On the other hand, strain hardening ratio is known as an effective nonlinear parameter on the post-yield stiffness of braces and can influence the residual drift demand in BRBFs. In this study the effect of strain hardening ratio on residual drift demand is investigated by using Probabilistic Seismic Demand Analysis (PSDA) that can consider different sources of uncertainties. For this purpose, 3 and 6-story BRBFs are studied for different hardening ratios in range (0%-4%). For residual and maximum drift parameters, demand hazard curves extracted according to the PSDA methodology. Comparisons of demand hazard curves for different ratios of hardening, demonstrates that by increasing the hardening ratio the residual drift demand will reduce significantly, while the maximum drift demand will decrease negligibility. On the other hand, strain hardening ratio parameter is known as a material property and it is a reason to do accurate experimental test on materials before using them as core of BRBs.

Keywords: BRBF, PSDA, residual drift, hardening ratio, hazard curve.

1. INTRODUCTION

After validation of Buckling-Restrained Braces (BRBs) behavior under cyclic loads with many extensive experimental and analytical studies, nowadays Buckling-Restrained Braced Frames (BRBFs) are used in practical construction projects especially in Japan and United States (Xie 2005; Kiggins and Uang 2006). Robust and stable symmetric nonlinear behavior in tension and compression loads makes BRBF as a favorable seismic resistant system (Bozorgnia and Bertero 2004; Ariyaratana and Fahnestock 2009). A typical BRB element is made from two main parts: 1- Steel core brace yields in tension and compression loads and releases large amount of energy while other structural elements are in elastic range. 2- Casing or buckling restraining mechanism that provides adequate lateral stiffness for core brace segment to control buckling phenomenon

* Presenter: Email: deylamia@aut.ac.ir

† Corresponding author: Email: deylamia@aut.ac.ir

(Bozorgnia and Bertero 2004). To remove axial loads transferring from core to casing, an expansion material is used between them (Bozorgnia and Bertero 2004). Figure 1 shows two main part of a typical BRB and cyclic behavior of their assemblage.

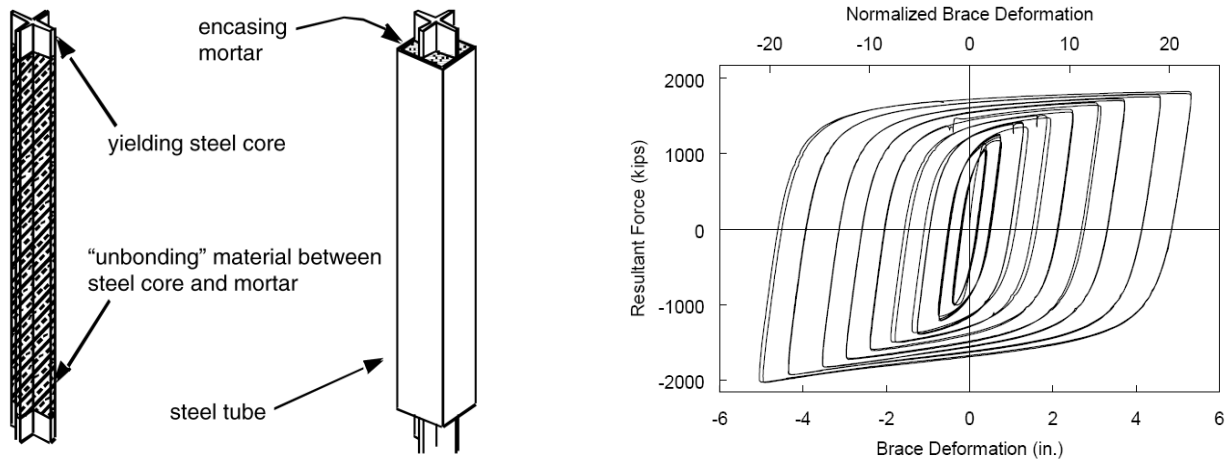

(a) **(b)**

Figure 1: (a) Two main parts of a typical BRB (Bozorgnia and Bertero 2004); and (b) cyclic behavior of their assemblage (Newell, Uang et al. 2006).

As a major defect, BRBFs have a low post-yield stiffness that concentrates large amount of residual drift on a story and affects the serviceability performance of structures after earthquakes such as opening and closing issue in doors and windows; also in elevators performance (Kiggins and Uang 2006; Ariyaratana and Fahnestock 2009) .On the other hand, the estimation of residual deformation demand is important in performance-based design methodology (Ruiz-Garcia and Miranda 2005). Some recommended seismic assessment provisions specify some limiting values on residual deformations (e.g., FEMA 356), but they do not specified procedures to estimate residual deformations demand (FEMA 2000; Ruiz-Garcia and Miranda 2005). The magnitude of residual deformations not only is important in determining the revival capacity of structures after earthquakes but also is particularly effective on seismic behavior for aftershocks or future events (Ruiz-Garcia and Miranda 2005; Ruiz-Garcia and Miranda 2008).

Analytical studies of BRBFs report the residual drifts with a mean value greater than 0.5% for Design Basis Earthquakes (DBE or 10%/50 years) and greater than 1% for the Maximum Considered Earthquakes (MCE 2%/50 years) (Ariyaratana and Fahnestock 2009). Moreover, the outcome of a large-scale hybrid pseudo dynamic test on BRBFs produced residual interstory drifts of 1.3% and 2.7% for the DBE and MCE earthquakes respectively (Ariyaratana and Fahnestock 2009). Therefore some studies have been done to improve low post-yield stiffness of BRBFs by using them as dual systems (Ariyaratana and Fahnestock 2009). Kiggins and Uang (2006) have shown that the BRBF-SMRF dual systems decrease residual interstory drifts about 50% while,

maximum story drift will be reduced 10% compared to the simple BRBF systems (Kiggins and Uang 2006; Ariyaratana and Fahnestock 2009).

2. OBJECTIVE AND SCOPE

In this study the effect of strain hardening ratio on BRBFs residual drift demand is investigated by using Probabilistic Seismic Demand Analysis (PSDA) that can consider different sources of uncertainties. For this purpose, 3 and 6-story BRBFs are studied for different hardening ratios in range (0%-4%). For residual and maximum drift parameters, demand hazard curves are obtained according to the PSDA. Comparison of demand hazard curves for different ratios of strain hardening, can illustrate the effect of hardening ratio on residual drift and maximum drift demand of BRBFs.

3. PROBABILISTIC SEISMIC DEMAND ANALYSIS

Seismic motions and resulting responses of structures due to such motions are probabilistic in nature, and therefore a probabilistic approach needs to be used for assessment of seismic behavior of structures due to future earthquakes (Lin, Naumoski et al. 2008). Probabilistic Seismic Demand analysis (PSDA) provides a rational way to evaluate the seismic demand hazard of a specified structure built on specific seismic site conditions by considering different sources of uncertainties. This is done by integrating probabilistic structural response over all potential level of ground motion intensity (Ruiz-Garcia and Miranda 2005; Ruiz-Garcia and Miranda 2008). The PSDA approach is an application of the Total Probability Theorem which is mathematically expressed as follows (Jalayer 2003):

$$\lambda_{EDP}(edp) = \int_0^{\infty} P(EDP>edp\,|IM=im).\left|\frac{d\lambda_{IM}(im)}{d(im)}\right| d(im) \qquad (1)$$

Where EDP is defined as Engineering Demand Parameter (e.g. Roof drift, Residual inter story drift, etc.) and IM identifies the ground motion intensity measure (e.g. Spectral elastic acceleration at the first mode period of vibration $S_a(T_1)$) (Jalayer 2003; Ruiz-Garcia and Miranda 2005).

The mean annual frequency of exceedance a specified engineering demand parameter, edp, is shown as $\lambda_{EDP}(edp)$ while $\lambda_{IM}(im)$ refers to the seismic hazard at site, measure in term of mean annual frequency of a ground motion intensity parameter IM, exceeding a specific level of intensity, im (Ruiz-Garcia and Miranda 2005; Ruiz-Garcia and Miranda 2008).

In addition the term P(EDP>edp|IM=im) expresses the conditional probability of exceeding a specific edp given that the ground motion intensity parameter IM is equal to im (Ruiz-Garcia and Miranda 2005). Information of P(EDP>edp|IM=im) is obtained from nonlinear dynamic analysis performed for a specific structure subjected to a set of ground motion scaled to various levels of intensity that represent the local seismicity (Ruiz-Garcia and Miranda 2005). For using P(EDP>edp|IM=im) in close form in equation (1) a Cumulative Distribution Function (CDF) must

be fitted on structure responses when the set of ground motions scaled in various level of intensity measure (Ruiz-Garcia and Miranda 2005; Lin, Naumoski et al. 2008). It has been demonstrated that a Lognormal CDF is enough to fit data accurately. So the probability function P(EDP>edp|IM=im) can be written as (Ruiz-Garcia and Miranda 2005):

$$P\left(EDP>edp|IM=im\right)=1-\Phi\left[\frac{Ln\left(edp\right)-\mu_{Ln(EDP)}}{\sigma_{Ln(EDP)}}\right] \quad (2)$$

Where $\Phi[.]$ denotes the standard normal cumulative distribution function. In this equation the $\mu_{Ln(EDP)}$ and $\sigma_{Ln(EDP)}$ represent respectively the mean and standard deviation of the natural logarithm of the EDP at intensity level im (Ruiz-Garcia and Miranda 2005; Lin, Naumoski et al. 2008).

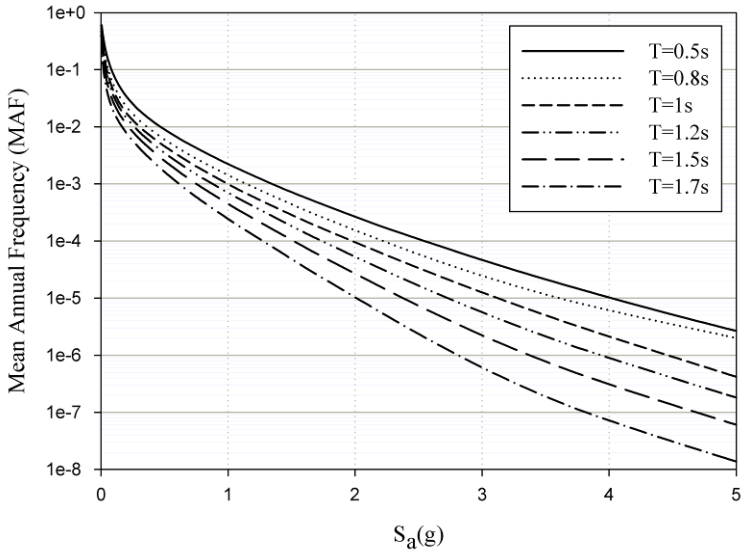

Figure 2: Elastic spectral acceleration hazard curves for different period of vibration (5% damping) for a given site located inside (34.95, -118.95) coordinates (USGS 2012).

The term $\lambda_{IM}(im)$ is the site-specific hazard that should be available, which is commonly provided by seismologists for a given site (e.g. the USGS website) (Jalayer 2003). Each curve provides the mean annual frequency of exceeding a particular im for a given period and damping ratio (Jalayer 2003). Figure 3 shows hazard curves for hypothetical site that studied structures in this paper are located on it. In this figure $S_a(T_1)$ is set as intensity measure.

3.1. EDP definition

In this investigation two different parameters are discussed as EDP in accordance with PSDA methodology. These parameters are Maximum Interstory Drift Ratio (IDR_{max}) and Maximum Residual Interstory Drift Ratio ($RIDR_{max}$). It must be mentioned that IDR_{max} and $RIDR_{max}$ are the maximum interstory drift ratio and residual interstory drift ratio between all stories of a structure.

3.2. IM definition

The Intensity Measure (IM) is selected as elastic spectral acceleration at the fundamental structural period, $Sa(T_1)$, which is currently the most used IM in other researches (Jalayer 2003; Lin, Naumoski et al. 2008). The previous studies have shown that using of $Sa(T_1)$ as IM can make less dispersion in the results then others (PGA and PGV) (Vamvatsikos and Cornell 2005).

4. STUDEID FRAMES

4.1. Design information

In this investigation the seismic demands of two BRBFs are assessed. Regarding to the geometry, studied frames have 3 and 6 stories with similar story height equals to 4 m. Also all frames bay have width equal to 6 m. As brace configuration all BRBs are used in diagonal configuration. Figure 4 shows the geometry one bay studied BRBFs.

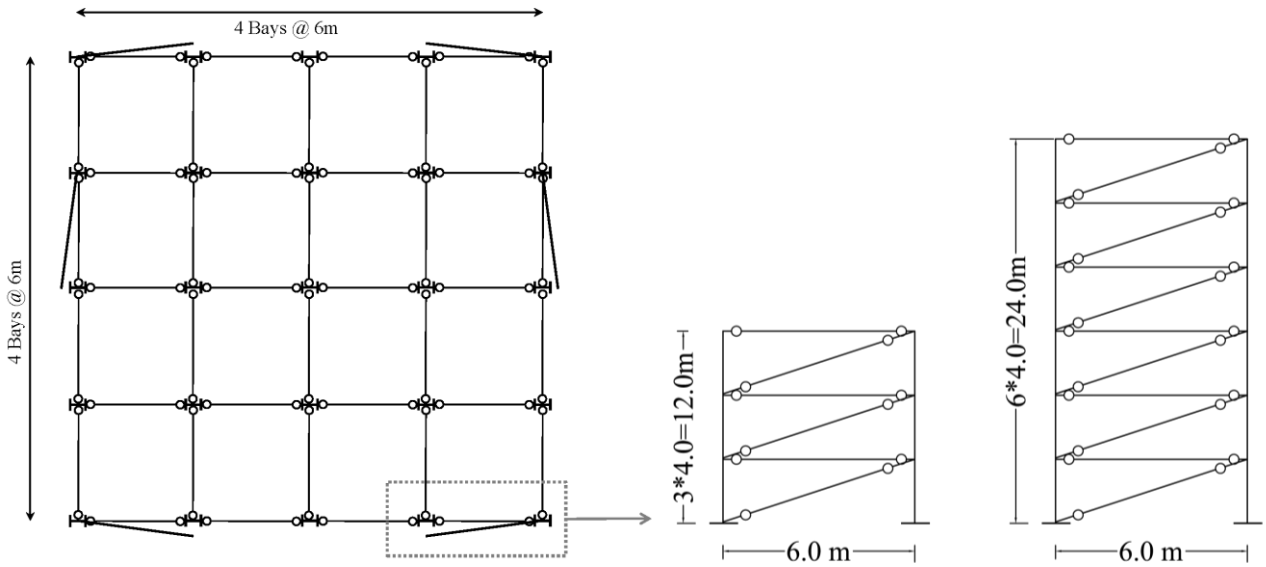

Figure 3: Geometry of studied 3 and 6-story BRBFs and braces configuration.

It is supposed that all buildings located in a site with (34.95, -118.95) coordinates and seismic parameters, S_s=1.541g and S_1=0.887g. Moreover this site is located on soil class D and seismic category E in accordance with ASCE7-10 (ASCE 2010) with important factor, I equals to 1. In addition the ASCE7-10 represent response modification factor, R = 8 for BRBFs (ASCE 2010).

As gravity loads, 5 KN/m^2 and 2 KN/m^2 are considered as story dead and live loads respectively for all stories. With a view to design seismic loads the equivalent lateral force procedure represented in ASCE7-10 (ASCE 2010) is used and supposed that all stories have a horizontal rigid diaphragm. All steel beams and columns are selected from W-Sections in practical manner and all of them made from steel with yield stress F_y=345 Mpa. Also the yield stress is taken as F_y=290Mpa for BRBs steel cores. In addition, structural elements are designed according to Specification for Structural Steel Buildings (AISC 2010).

4.2. Nonlinear models

For doing nonlinear analyses of mentioned frames, simplified 2D models made by using OPENSEES framework. For BRB elements the yielding segment modeled by Corotational Truss element (Mazzoni, McKenna et al. 2006) with 2/3 of total brace length. The rest of the braces length are modeled by a section 3 times greater than the core brace. For all brace segments Giuffré-Menegotto-Pinto (Steel02) selected as nonlinear material with 0%, 1%, 2%, 3% and 4% strain hardening ratio to investigate the effect of hardening on BRBFs seismic demands. It must be mentioned that the Corotational Truss element is not capable to buckle (Mazzoni, McKenna et al. 2006).

For modeling nonlinear behavior of beams and column NonLinear Beam-Column Element along with fiber section is used by Steel02 as nonlinear material with 2% strain hardening ratio. For considering the P-Δ effect of adjacent frames the leaning column technique is used by adding a gravity low lateral stiffness column linked to the main structure with gravity loads equal to adjacent frames (Uriz and Mahin 2008). It must be mentioned that Rayleigh damping is used for modeling damping effect based on two first modes of vibration and 5% critical damping ratio.

4.2.1. Ground motions

Because of locating studied frames on a site with soil class D in accordance with ASCE7-10, for performing time history analyses (IDA Analyses) 20 ground motions (10 pairs) presented in SAC studies for Los Angeles and soil type D are used (FEMA 2000).

5. RESULTS

For two expressed BRBFs, nonlinear dynamic time history analyses done for the given set of ground motions and for different intensity measure scales, $S_a(T_1)$. Accordance with PSDA methodology in each level of intensity measure $S_a(T_1)=s_a(T_1)$, a lognormal CDF fitted on responses. By using numerical integration in equation (1) and the site hazard curves (Figure 3), the demand hazard curves for two responses (IDR_{max}, $RIDR_{max}$) obtained. Figure 5 and 6 show the demand hazard curves for the two defined EDPs (IDR_{max}, $RIDR_{max}$) and different hardening ratios (0%-4%). The curves of IDR_{max} and $RIDR_{max}$ for each frame have been given in a same graph.

In accordance with Figure 5 and 6, changing hardening ratio from 0% to 4% can reduce the residual drift demand ($RIDR_{max}$) notably while the maximum drift demand (IDR_{max}) decreased negligibly. It demonstrates that making a little change on hardening ratio causes an important change on residual drift demand. For quantitative comparison the IDR_{max}, $RIDR_{max}$ demands extracted in DBE (10%/50 years) and MCE (2%/50 years) hazard levels. For example by changing strain hardening ratio from 1% to 3% the $RIDR_{max}$ reduced 21.4% and 35.8% in DBE and MCE hazard levels respectively. However IDR_{max} demand by changing strain hardening ratio from 1% to 3% affected slightly and reduced only 5.8% and 8.1% in DBE and MCE hazard levels respectively. These reductions show the importance of hardening ratio on residual drift demand.

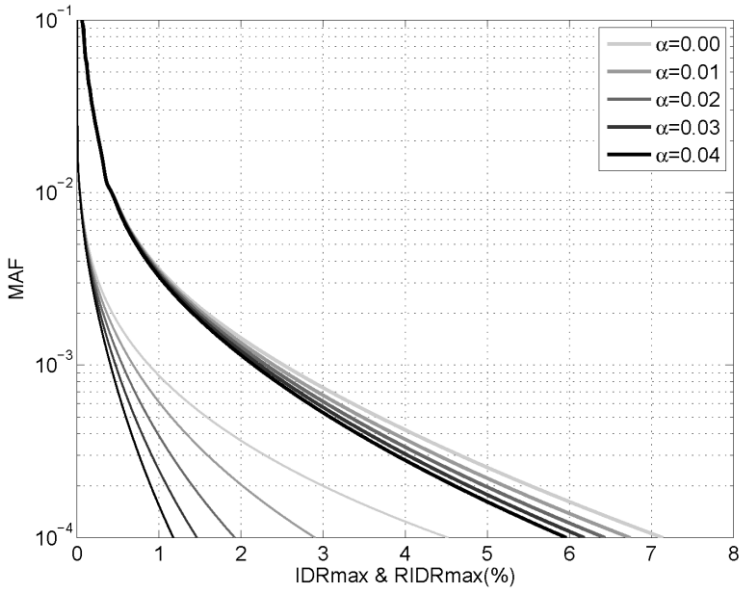

Figure 4: Demand hazard curves for two responses (IDR_{max}, $RIDR_{max}$) in 3-story BRBF for different hardening ratios (0%-4%).

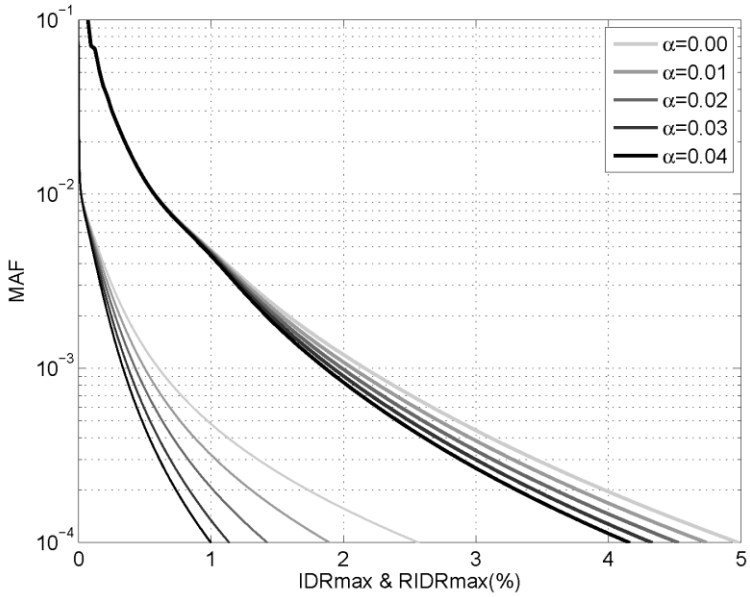

Figure 5: Demand hazard curves for two responses (IDR_{max}, $RIDR_{max}$) in 6-story BRBF for different hardening ratios (0%-4%).

On the other hand, strain hardening ratio parameter is known as a material property and it is a reason to do accurate experimental test on materials before using them as core of BRBs.

6. CONCLUSIONS

In this paper the effect of strain hardening ratio on Buckling-Restrained Frames seismic demands investigated by using Probabilistic Seismic Demand Analysis (PSDA). For this purpose 3 and 6-story BRBFs studied for a range of strain hardening (0%-4%). Comparison of hazard curves for

different amount of hardening ratio demonstrated significant effects of hardening ratio on residual drift demand while, changing hardening ratio on the defined range have a little effect on maximum drift demand. So a small change in amount of hardening ratio can affect the restoring ability of BRBFs and it is a reason to do accurate experimental test on materials before using them as core of BRBs.

REFERENCES

AISC (2010). Specification for structural steel buildings: AISC 360. Chicago, Illinois.

Ariyaratana C, and Fahnestock LA, (2009). Performance assessment of buckling-restrained braced frame dual systems. Proceedings Behaviour of Steel Structures in Seismic Areas (STESSA). Philadelphia, Taylor & Francis Group.

ASCE (2010). Minimum design loads for buildings and other structures: ASCE/SEI 7. Reston, Virginia.

Bozorgnia Y, and Bertero VV, (2004). Earthquake engineering: from engineering seismology to performance-based engineering. Boca Raton, Fla., CRC Press.

FEMA (2000). Prestandard and commentary for the seismic rehabilitation of buildings: FEMA 356, Washington, D.C.

FEMA (2000a). State of the art report on systems performance of steel moment frames subject to earthquake ground shaking: FEMA 355C, Washington, D.C.

Jalayer F, (2003). Direct probabilistic seismic anaysis: implementing non-linear dynamic assessments. Ph.D. thesis, Civil and environmental engineering, Stanford University.

Kiggins S, and Uang CM, (2006). Reducing residual drift of buckling-restrained braced frames as a dual system. Engineering Structures 28: 1525–1532.

Lin L, Naumoski N, et al. (2008). Probabilistic assessment of the seismic vulnerability of reinforced concrete frame buildings in Canada. The 14th world conference on earthquake engineering. Beijing, China;.

Mazzoni S, McKenna F, et al. (2006). OpenSees command language manual.

Newell J, Uang C, et al. (2006). Subassemblage testing of corebrace bucklingrestrained braces (G series). California, San Diego, Department of structural engineering university of California.

Ruiz-Garcia J, and Miranda E, (2005). Performance-based assessment of existing structures accounting for residual displacements. Ph.D. thesis, Civil and environmental engineering ,Stanford University.

Ruiz-Garcia J, and Miranda E, (2008). Probabilistic seismic assessment of residual drift demands in existing buildings. Proceedings the 14th world conference on earthquake engineering. Beijing,China.

Uriz P, and Mahin SA, (2008). Toward earthquake-resistant design of concentrically braced steel-frame structures, Pacific Earthquake Engineering Research Center.

USGS. (2012). Earthquake Hazards Program. from http://earthquake.usgs.gov/hazards/?source=sitenav.

Vamvatsikos D, and Cornell CA, (2005). Seismic performance, capacity and reliability of structures as seen through incremental dynamic analysis. Ph.D. thesis, Department of civil and environmental engineering, Stanford university.

Xie Q, (2005). State of the art of buckling-restrained braces in Asia. Constructional Steel Research 61: 727–748.