EVALUATION OF EFFECTIVENESS OF COUNTERMEASURES TO REDUCE BRIDGE VIBRATION CAUSED BY SHINKANSEN

L.M. SUN[1*], T. HAYASHIKAWA[2], X. HE[2], M. KAWATANI[3],
T. MATSUMOTO[2] and W.P. XIE[4]

[1]*Graduate School of Engineering, Hokkaido University, Japan*
[2]*Faculty of Engineering, Hokkaido University, Japan*
[3]*Graduate School of Engineering, Kobe University, Japan*
[4]*School of Civil Engineering and Architecture, Wuhan University of Technology, China*

ABSTRACT

With the rapid urban development, bridge vibrations induced by high-speed running Shinkansen train have been given more attention. Bridge vibrations propagate from the track and pile structures into the subsoil, thereby cause some long-term environmental vibration and noise problems. In order to mitigate bridge vibrations, this study is intended to evaluate the effectiveness of proposed vibration countermeasures using an analytical approach. Analytical results are compared with experimental ones to demonstrate the validity of the analytical procedure. The dynamic responses such as root-mean-square value, maximum acceleration and the relative vibration acceleration level of one-third octave band spectra of vibration countermeasures are investigated through comparing with the basic bridge model without reinforcement. The proposed strut reinforcement, strut and foundation beam reinforcement are the effective vibration countermeasures to mitigate the vertical and lateral bridge vibrations. The analytical approach employed in this study offers a convenient tool to evaluate or predict bridge vibrations and propose effective vibration countermeasures.

Keywords: Shinkansen, vibration countermeasures, bridge vibrations, train-bridge interaction.

1. INTRODUCTION

With the rapid urban development, the Shinkansen serves a vital role in the national transportation network that connects its major cities since 1964. When Shinkansen trains are high-speed running on the railway bridge, bridge is subjected to dynamic loads which induce serious bridge vibrations. In major urban areas, Shinkansen viaducts are often so adjacent to residences or important facilities. Bridge vibrations propagate to the ambient ground via footing and pile structures, thereby causing some long-term environmental vibration and noise problems such as influence to precision instruments in hospitals and laboratories, or people who are studying or resting in schools, hospitals and residences and so on (Seki et al. 1997). So it is inevitable to take the dynamic factors into

* Corresponding author: Email: sunliangming@gmail.com

account in predicting the properties of bridge structures under high-speed running Shinkansen train, to ensure the serviceability of bridge, running safety, stability of trains and friendly environment through using proposed vibration countermeasures to mitigate bridge vibrations.

In recent year, effort has been devoted to experimental studies and analytical studies of bridge vibrations induced by train-bridge interactions (Xia et al. 2005; Yang et al. 2004; Zhang et al. 2008). Analytical studies were mainly focused on the following problems: modeling of vehicle, modeling of bridge, modeling of wheel-rail interaction, adoption of track irregularities and numerical solution algorithms for train-bridge interaction equations. Based on the field test data around Shinkansen viaducts, Yoshida et al.(2004) indicated influence of improved rigidity in railway viaducts for the reduction of ground vibration. Hara et al.(2004) attempted to clarify the site vibration around Shinkansen viaducts by both experiments and analytical procedure and propose a new reinforcement method. However in their analysis, the wheel load of the train is only treated as simple equivalent moving force based on the measured results. He et al.(2008) established an analytical approach to evaluate the effects of proposed countermeasures against the site vibration around Shinkansen viaducts caused by running Shinkansen trains. But the train model was 9 DOFs car model and the effects of vertical dynamic response were only evaluated.

In this study, in order to evaluate the effectiveness of proposed vibration countermeasures to mitigate bridge vibrations caused by running Shinkansen, 15 DOFs train model and viaduct model for simulating the movement of train-bridge interaction system is established and the corresponding computer code is worked out. The dynamic responses such as root-mean-square value (RMS) and maximum (Max) acceleration and the relative vibration acceleration level (VAL) of one-third octave band spectra are discussed through comparing with the basic bridge model without reinforcement in vertical and lateral direction.

2. ANALYTICAL MODELS AND METHODS

2.1. Analytical models

In this study, Shinkansen train is comprised of 16 cars and the velocity is set as 270km/h, referring to the actual operational speed. Each car is modeled as 15 DOFs model as shown in Figure 1, assuming that car body and bogies are rigid bodies and that they are connected to each other three-dimensionally by linear springs and dampers. The sway, bouncing, pitching, rolling and yawing motions of car body, and the sway, parallel hop, axle windup, axle tramp and yawing motions of the front and rear bogies are considered.

Bridge is a typical high-speed railway reinforced concrete viaduct in the form of a rigid portal frame, whose dimensions and analytical model is shown in Figure 2. The viaduct is built with 24m length bridge blocks which are separated with each other and connected only by rail structure at adjacent ends. Each block has three 6m length center spans and two 3m length cantilever girders, so called hanging parts, at each end. Three blocks of bridge are adopted for the analysis and are modeled with

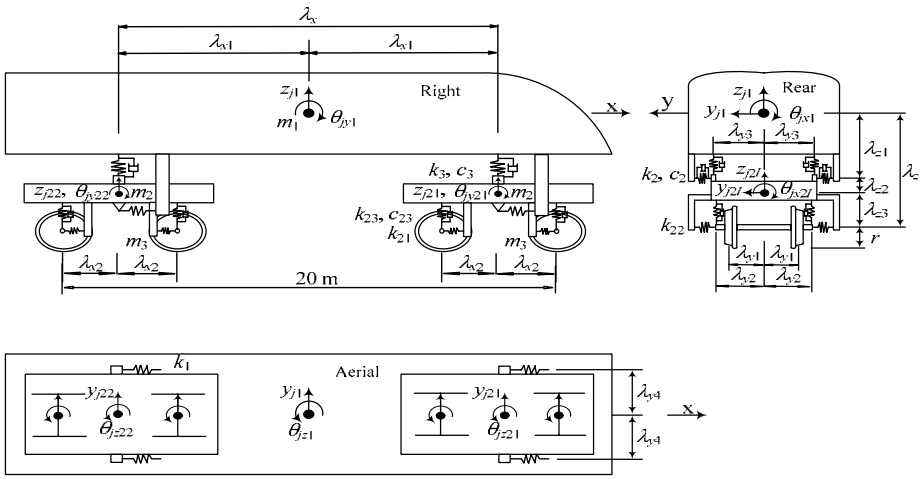

Figure 1: 15-DOF bullet train car model

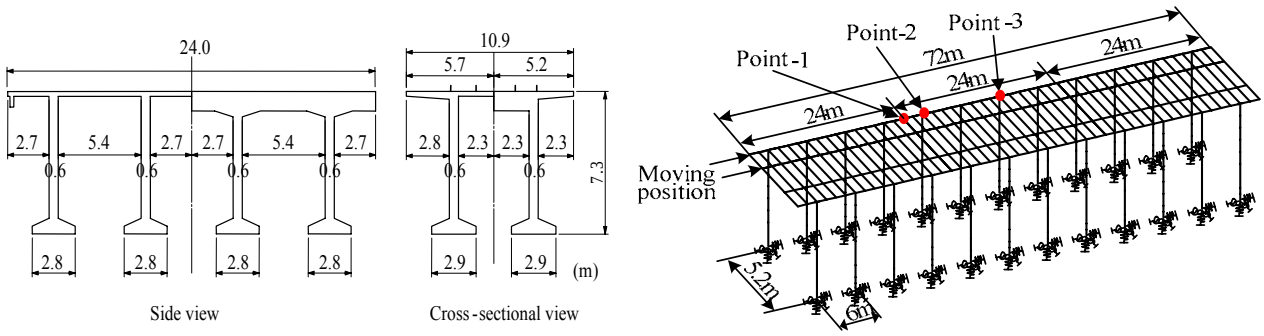

Figure 2: Dimensions and Analytical model of viaduct

3D beam elements. Double nodes defined as two independent nodes sharing the same coordinate are adopted at the pier bottoms to simulate ground spring effect and between the rail and slab to express the elastic effect of the sleeper and ballast. Rayleigh damping is adopted for the structural model. According to past field test results, a damping constant of 0.03 is assumed for the first and second natural modes of structure. Rail structure is also modeled as 3D beam elements with 6 DOFs at each node. The roughness in both vertical and horizontal directions of the rail surface is considered in the analysis.

2.2. Analytical methods

Dynamic responses of viaduct caused by Shinkansen train are analyzed by taking the train-bridge interaction into consideration based on the computer program. The viaducts, including the rail structure, are modeled as 3D beam elements. Dynamic differential equations of bridge are derived using modal analysis. Newmark's β step-by-step numerical integration method is applied to solve dynamic differential equations. The validity of analytical procedure is demonstrated through comparing analytical results with experimental ones. Then, the effectiveness of proposed countermeasures is evaluated through comparing with dynamic responses and the vibration acceleration level of basic model. Considering the extremely high speed of train, the time step interval in the numerical integral is set to 0.0005s.

3. DYNAMIC RESPONSES ANALYSIS OF BASIC BRIDGE MODEL

Through the eigenvalue analysis of basic bridge model, the predominant frequency of the horizontal natural mode is observed as 2.20Hz, showing good agreement with the value obtained from the field test, which is 2.19Hz. Therefore, the bridge model validation can be confirmed. Analytical acceleration responses and the measured ones in vertical direction, of point-1 through point-3 of viaduct indicated in Figure 2, are shown respectively in Figure 3, and those in horizontal direction of point-3 are shown in Figure 4. Their Max acceleration and RMS values together with the Fourier spectra are also indicated in the figures. Here, point-1, point-2 and point-3, respectively, are the hanging part, the top of first pier, and the top of third pier of viaduct, with respect to the direction that the train runs towards. As shown in Figure 3 and Figure 4, analytical results using the 15 DOFs bullet train model indicated good agreement with experimental results, thereby validating this analytical procedure. Vertical acceleration responses indicate the tendency of Point-1>Point-2> Point-3. For all points, the acceleration responses are predominant at around 10Hz and 20Hz. The hanging parts of viaduct are connected with neighboring ones by rails and ballast in the actual structure, but only the rails' connecting effect can be incorporated into analysis. Presumably for that reason, vibrations are predominant at lower frequencies and analytical acceleration responses display larger amplitudes than do experimental ones at point-1.

4. EVALUATE EFFECTIVENESS OF VIBRATION COUNTERMEASURES

4.1. Depiction of vibration countermeasures

In this study, according to both analytical results and field test results, the dynamic feature that the predominant vibration occurred at the hanging parts of viaduct is confirmed. Therefore, in order to reduce the vertical and lateral dynamic responses, it can be easily conceived that the excessive vibration will be reduced by means of reinforcing the hanging parts. Based on such consideration, three simple vibration countermeasures are proposed in Figure 5 such as follows.

Case 1: Rigid connection reinforcement method which is to connect the adjacent hanging parts rigidly.

Case 2: Reinforced with strut method which is to reinforce the hanging parts with steel struts. The stiffness of steel strut is designed to be 1/2 of that of a pier.

Case 3: Reinforced with strut and foundation beam method which is to reinforce the hanging parts with steel struts and connect the adjacent piers of hanging parts with foundation beams.

4.2. Dynamic responses analysis

For three vibration countermeasures, the vertical and lateral acceleration responses decrease in comparison with those before reinforcements, which of RMS value and Max acceleration are indicated in Table 1. The analytical results of vibration countermeasures indicate relatively good effectiveness of reduction bridge vibration responses in compared with the basic bridge model.

Table 1: RMS value and Max acceleration of viaduct

CASE	Vertical direction						Lateral direction					
	RMS value (Gal)			*Max acceleration* (Gal)			*RMS value* (Gal)			*Max acceleration* (Gal)		
	P-1	P-2	P-3	P-1	P-2	P-3	P-1	P-2	P-3	P-1	P-2	P-3
Basic model	106.53	26.78	14.74	279.23	77.96	44.59	5.32	3.54	6.81	22.11	11.59	24.92
Case 1	24.48	12.66	14.07	79.59	59.30	45.42	5.13	5.15	6.95	20.36	18.75	25.76
Case 2	34.69	17.80	14.52	113.59	60.15	54.38	4.86	2.45	3.20	24.33	11.31	13.22
Case 3	39.79	17.37	14.59	132.84	57.19	53.64	4.81	2.37	3.16	22.55	9.83	13.10

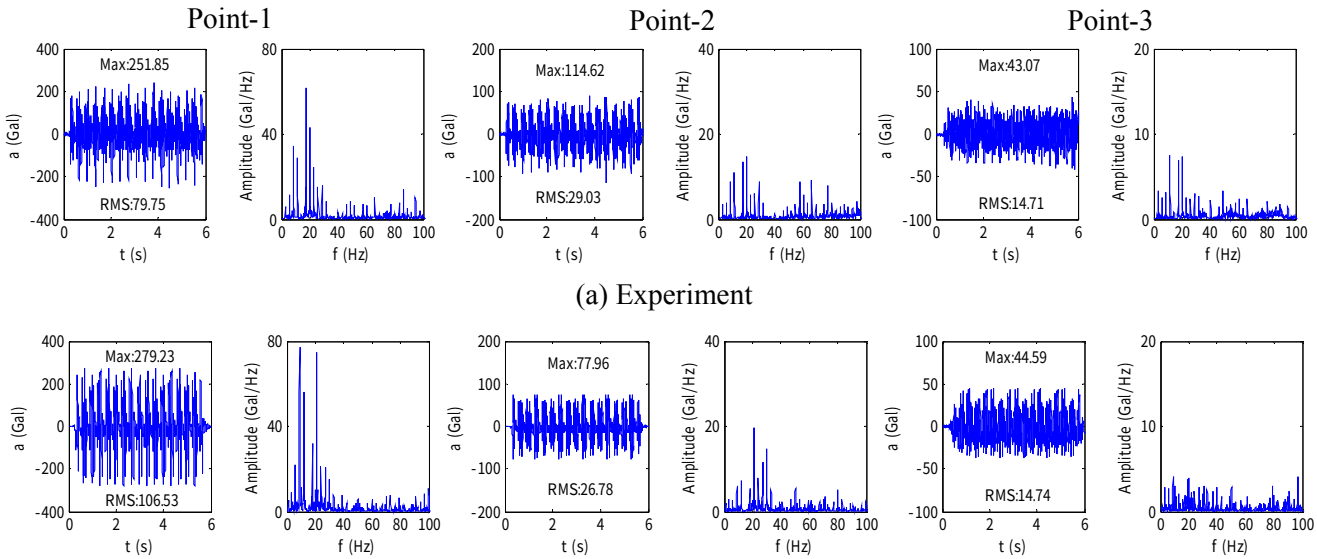

(a) Experiment

(b) Analysis

Figure 3: Vertical acceleration of viaduct

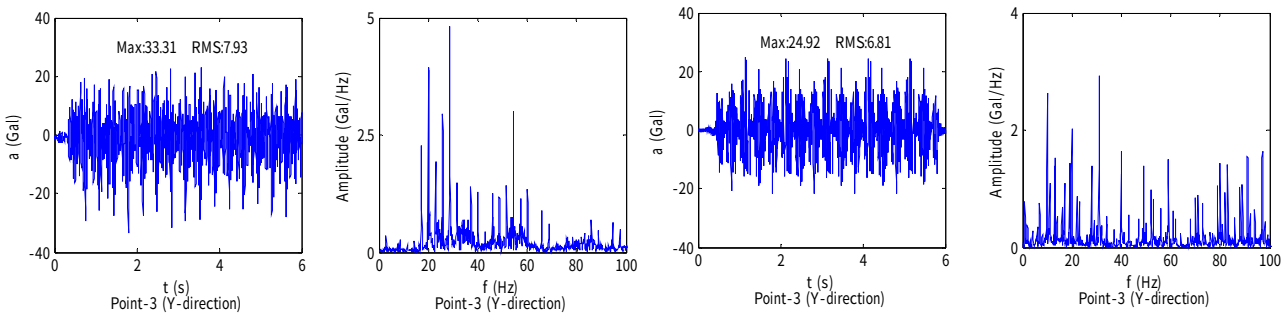

(a) Experiment

(b) Analysis

Figure 4: Lateral acceleration of viaduct

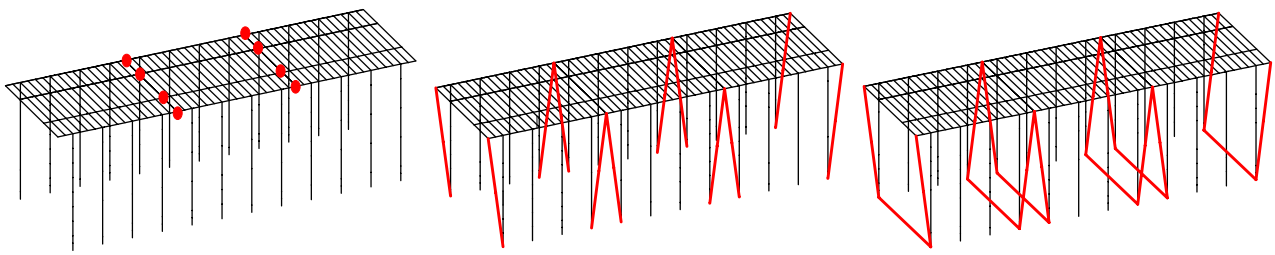

(a) Case 1

(b) Case 2

(c) Case 3

Figure 5: Depiction of vibration countermeasures

In the vertical direction, Case 1 seems to be more effective compared with Case 2 and Case 3. Max acceleration of Case 2 and Case 3 decreases respectively 59.32% and 52.43% at Point-1, but that of Case 1 decreases 71.50% compared with basic model. This is not only because of the increased rigidity of the hanging parts, but also because that the independent bridge blocks are connected and become structurally continuous. Thus the high speed bullet train can run through the viaducts smoothly and the impact effect of the wheel loads can be mitigated.

Furthermore, in the lateral direction, Max acceleration of Case 1 decrease 77.02% compared with basic model at Point-1. That of Case 2 and Case 3 decrease respectively 67.44% and 62.65%. However, the acceleration responses of Case 1 cannot decrease and those of Case 3 decrease obviously at Point-2 and Point-3 simultaneously. This is because of the foundation beams that connect the adjacent piers of hanging parts. The lateral vibration responses are limited due to increase the lateral rigidity of viaduct.

4.3. Evaluation vibration acceleration level

For three vibration countermeasures, the vertical and lateral one-third octave band spectra at each point are indicated in comparison with those before reinforcements in Figure 6. Those VAL values are smaller than that of basic bridge model. Therefore, the VAL of vibration countermeasures indicate relatively good effectiveness of reduction in compared with basic model.

In the vertical direction, one-third octave band spectra of basic model is indicated the same properties with the Fourier spectra such as the tendency of Point-1>Point-2>Point-3 and predominant frequencies at around 10Hz and 20Hz in the figure. The VAL values of basic model are bigger than that of vibration countermeasures. The responses in the higher frequency ranges can be confirmed to be decreased apparently because the lower frequency responses due to the structurally free hanging parts are reduced by the reinforcements. At Point-1, the reduction VAL values of vibration countermeasures is very obvious such as the total VAL values of Case 1, Case 2 and Case 3 decreases respectively 10.8dB, 9.1dB and 8.0dB compared with basic model. The reduction VAL values at Point-2 is bigger than that at Point-3 because Point-2 is close to the hanging parts.

In the lateral direction, the analytical base point of VAL is 20dB smaller than that of VAL in the vertical direction. Therefore, it implies that the lateral vibration effect is very smaller than the vertical one. From the figure, the properties of vibration countermeasures are the similar with the basic model, and VAL values at Point-1 are the similar with those at Point-2 and Point-3. Case 2 and Case 3 can decrease the total of VAL values respectively about 1dB, 5dB and 7dB at Point-1 to Point-3, but Case 1 cannot decrease the total of VAL values. Case 2 and Case 3 show relative good effectiveness of reduction bridge vibration.

However, it is not realistic to completely connect the hanging parts rigidly because the structural type is changed and some mechanics problems may be induced. Therefore, in actual application of

reinforcement methods, an effective reinforcement structure similar to Case 2 and Case 3 should be designed to possess as possible a close effect like the rigid connection method. Then, Case 2 and Case 3 are good vibration countermeasures to decrease the vertical and lateral acceleration responses concurrently.

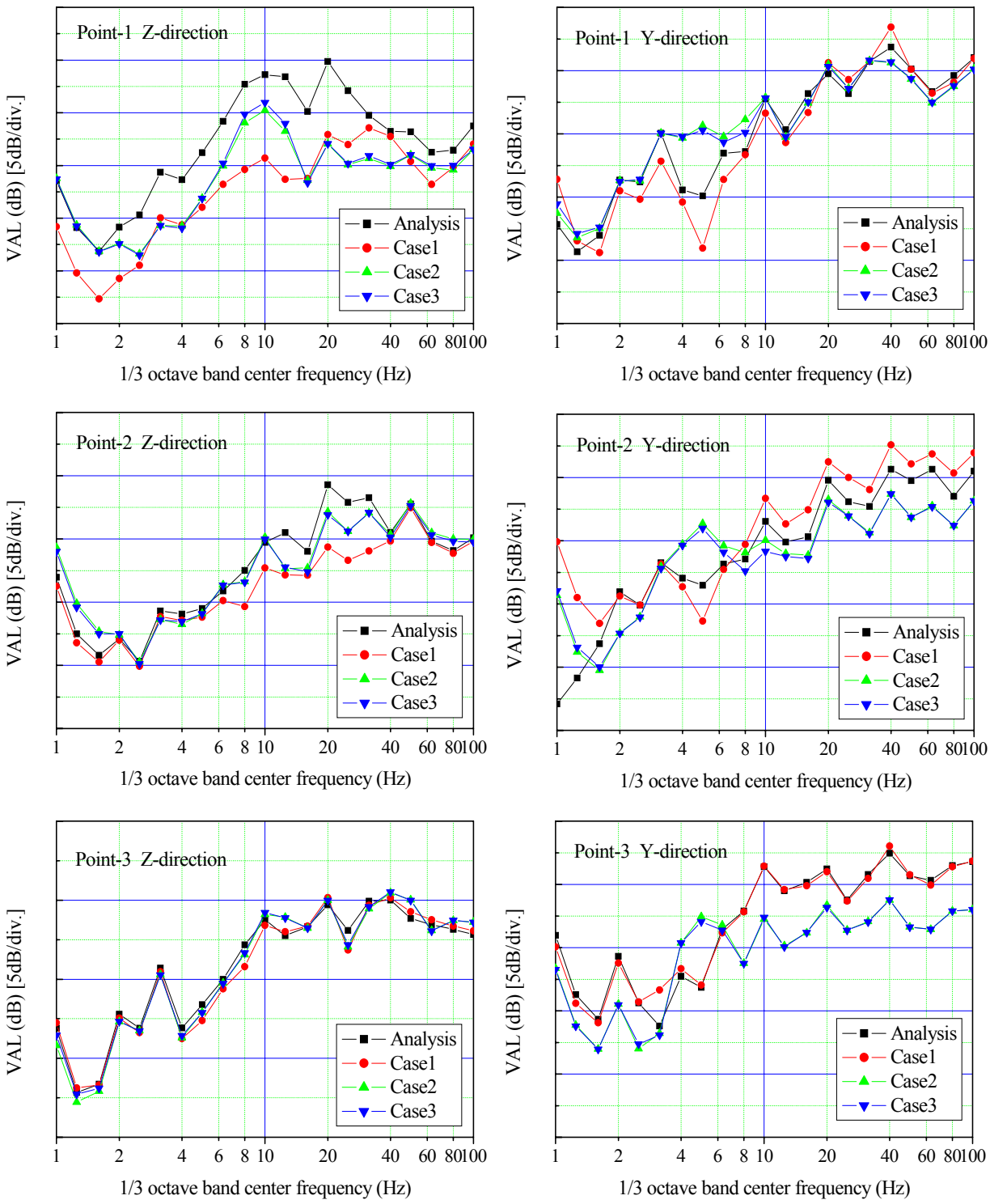

(a) Vertical direction

(b) Lateral direction

Figure 6: 1/3 octave band spectra of analytical bridge vibrations

5. CONCLUSIONS

To evaluate the effectiveness of proposed vibration countermeasures to reduce bridge vibrations caused by running Shinkansen, the dynamic responses such as RMS value and Max acceleration and the relative VAL of one-third octave band spectra is discussed through comparing with the basic bridge model without reinforcement in vertical and lateral direction. The followings are the conclusions obtained by the study.

(1) The analytical model of the train-bridge interaction system and the computer simulation method proposed can well reflect the vibration characteristics of viaduct through comparing with the experimental data, which verified the validity of the analytical model and the computer simulation method.

(2) The proposed Case 2 and Case 3 are the effective vibration countermeasures to mitigate the vertical and lateral bridge vibrations. The hanging parts are key parts for decreasing the vibration responses, so an effective reinforcement structure should be designed to limit the hanging parts' vibrations as possible in the actual application.

(3) The analytical approach can be applied to predict and evaluate the train-induced bridge vibration problems and propose corresponding vibration countermeasures. Viaduct as main vibration source can radiate vibration and noise and as propagation path can propagate train-bridge interaction to ground. Through adopting vibration countermeasures to viaduct, the vibration and noise can be mitigated for improving environment along the railway line.

REFERENCES

Hara T, Yoshioka O, Kanda H, Funabashi H, Negishi H, Fujino Y and Yoshida K (2004). Development of a new method to reduce Shinkansen-induced wayside vibrations applicable to rigid frame bridges: bridge-end reinforcing method. Journal of Structural and Earthquake Engineering, JSCE. 68(766), pp.325-338. (In Japanese)

He X, Hayashikawa T, Kawatani M, Nishiyama S and Matsumoto T (2008). An analytical approach to evaluate countermeasures against train-induced site vibration around Shinkansen viaducts. Journal of Constructional Steel, JSSC. 16, pp. 325-332. (In Japanese)

Seki M, Inoue Y and Naganuma Y (1997). Reduction of subgrade vibration and track maintenance for Tokaido Shinkansen. WCRR'97 (Firenze, Italy). E. pp. 395-402.

Xia H, Zhang N and Gao R (2005). Experimental analysis of railway bridge under high-speed trains. Journal of Sound and Vibration. 282(1-2), pp. 517-528.

Yang YB and Yau JD (2004). Vehicle-bridge interaction element for dynamic analysis. Journal of Structural Engineering. 123(11), pp. 1512-1519.

Yoshida K and Seiki M (2004). Influence of improved rigidity in railway viaducts on the environmental ground vibration. Journal of Structural Engineering, JSCE. 50A, pp. 403-412. (In Japanese)

Zhang N, Xia H and Guo WW (2008). Vehicle-bridge interaction analysis under high-speed trains. Journal of Sound and Vibration. 309(3-5), pp. 407-425.