EXPERIMENTAL STUDY ON THE LOAD CARRYING CAPACITY OF THE STEEL GIRDER END WITH THE CORROSION DAMAGE

Y. TAMBA[1*], K. HASHIMOTO[2], K. SUGIURA[3], and D. TANAKA[4†]

[1]*Planning & Research Department, Hanshin Expressway Technology Center, Japan*
[2]*Assistant Professor, Department of Civil & Earth Resources Engineering, Kyoto University, Japan*
[3]*Professor, Department of Civil & Earth Resources Engineering, Kyoto University, Japan*
[4]*Graduate Student, Department of Civil & Earth Resources Engineering, Kyoto University, Japan*

ABSTRACT

At end parts of steel girders, corrosion damages have been mostly easy to occur due to water leakage containing chloride ion of anti-freezing agent because of damages of expansion joints. Therefore, to make clear load carrying capacity of a steel girder with a corrosion damage at the girder end, the loading experiments were conducted. The non-damaged and the corrosion damaged specimens modelled a steel girder end which are designed with actual size are prepared. The corrosion damage was artificially added to the girder end. From the result of the loading experiment, the loading capacity of the corrosion damaged specimen was about 50% lower than the non-damaged specimen.

Keywords: corrosion, girder ends, load carrying capacity, experiment

1. INTRODUCTION

A steel girder has very narrow space at ends of the girder because it has end floor beams, gusset plates and lateral bracings in the girder ends, and expansion gaps between steel girder ends and next beams or abutments. In Hanshin Expressway in Japan, anti-freezing agent has been often sprinkled on the road surfaces in winter season to protect from freezing of the road surfaces. Therefore, at ends of steel girders, corrosion damages have been mostly easy to occur due to water leakage containing the anti-freezing agent because of damages of expansion joints. As a situation of corrosion damages of a steel girder end, thickness of a web positioned at lower side and a stiffener on a support is decreasing in many cases. Since especially thickness of a web is generally thinner than that of a stiffener on a support, a hole may have opened at a web in a case of severe corrosion.

In this study, in order to make clear the load carrying capacity of the steel girder with the corrosion damage at the girder end, the loading experiments using the test specimen of the steel girder end which imitated actual size and the corrosion damage was conducted. The non-damaged specimen

* Corresponding author: Email: yoshio-tamba@tech-center.or.jp

† Presenter: tanaka.daisuke.65m@st.kyoto-u.ac.jp

was also prepared and the test was carried out to compare with the corrosion specimen.

2. ACTUAL SIZE EXPERIMENT

2.1. Design of Test specimens

The dimension of the test specimens has actual size of an I-section simple steel girder built in 1968, and the specimens are modeled the end panel of the girder only. Two test specimens which were the non-damaged specimen and the corrosion damaged specimen were prepared. The dimension of the test specimens is shown in Figure 1. In the test specimens, the length is 2,700mm, the height of the web is 1,200mm, and the thickness of the web and the stiffener on the support is 9mm and 25mm respectively. The aspect ratio of the panel of the web is about 0.83.

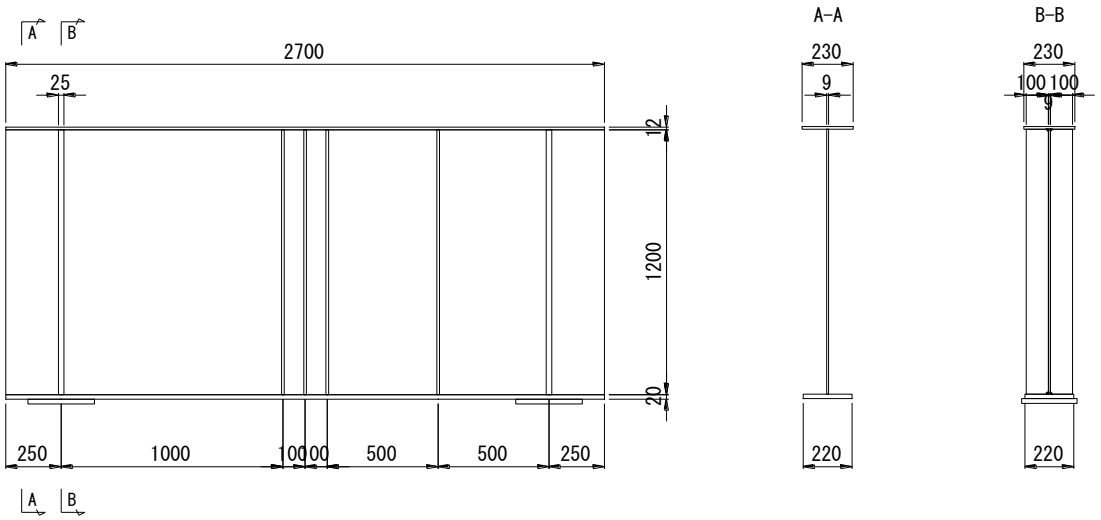

(a) Non-damaged specimen

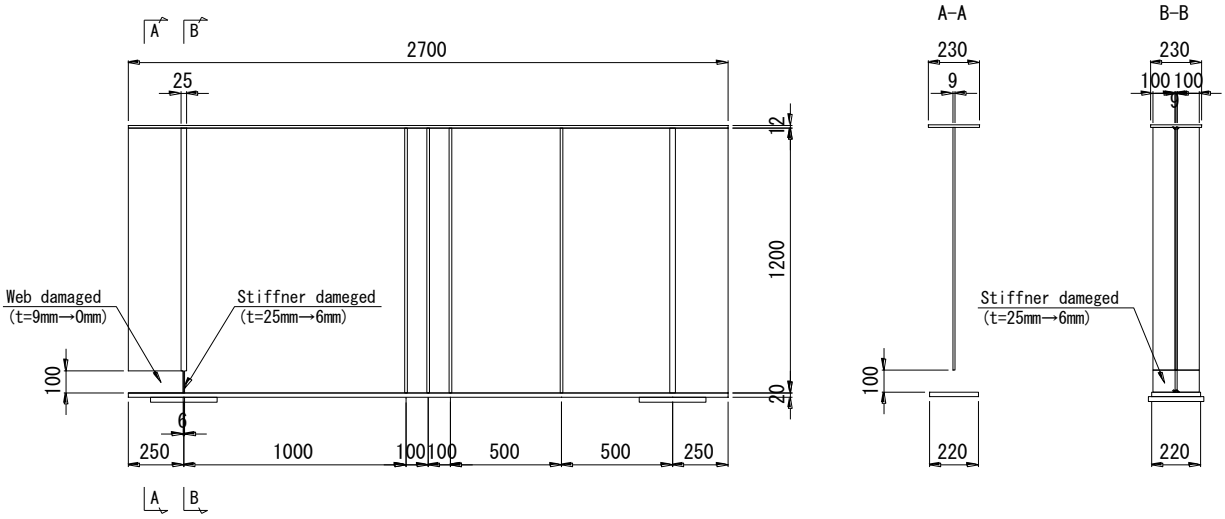

(b) Corrosion damaged specimen

Figure 1: Dimension of the test specimens (mm)

To simulate the corrosion, the corrosion damaged specimen was cut at the web on the side of girder edge from the stiffener on the support in the range of 100mm height from the lower flange, and the thickness of the stiffener on the support was shaved to 6mm in the range of 100mm height from the lower flange. These damages were produced shaving the original members mechanically. Moreover, although the stiffener on the support is joined to the lower flange by fillet welding in the non-damaged specimen, the stiffener on the support is only touched to the lower flange in the corrosion damaged specimen considering the weld zone is damaged by the corrosion.

The material test results of the steel materials used for the experiment are shown in Table 1.

Table 1: Material test results

Member	Steel material symbol	Thickness (mm)	Yield strength (N/mm^2)	Tensile strength (N/mm^2)	Elastic modulus (N/mm^2)	Poisson's ratio
Upper Flange	SM490A	12	381.8	515.3	2.15×10^5	0.29
Web	SM490A	9	399.5	536.3	2.16×10^5	0.28
Stiffener on the support	SM400A	25	259.5	428.1	2.10×10^5	0.32
Lower Flange	SM400A	20	272.2	423.9	1.94×10^5	0.30

2.2. Loading and measuring

The experiment was executed by using a oil jack system (5,000kN) in the structural mechanics laboratory of Kyoto University. The set-up of the specimen is shown in Picture 1. The load was applied on the steel plate (250mm length, 230mm width, 400mm thickness) placed on the upper flange on the position of 1,100mm from the stiffener on the support (center of the specimen). Since the supports in the both sides were used the steel roller, the movement of the horizontal displacement and rotation were possible. In order to prevent the lateral-torsion buckling of the girder, the prevention jig was installed in the both sides of the specimen. In addition, the Teflon boards were inserted between the prevention jig and the specimen as the specimen can move for bridge axial direction.

The loading test was executed after the preliminary loading test in the elastic range, and the load was applied until the load dropping to around 95% of the maximum load after the maximum load appearance.

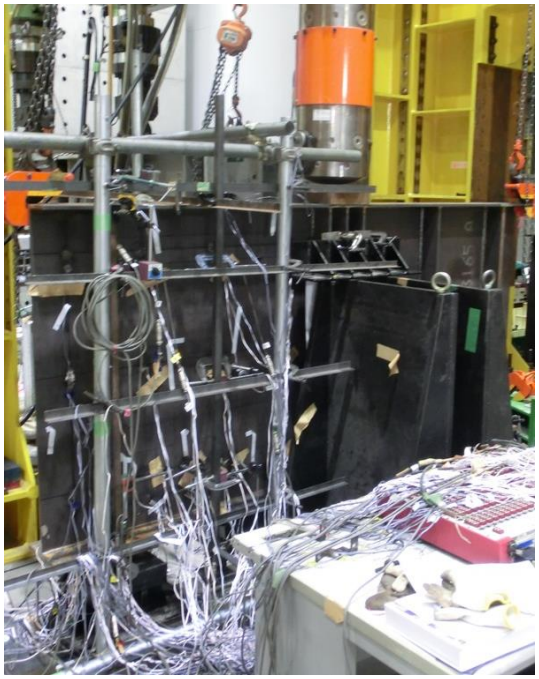

Picture 1: The situation of the experiment

As shown in Figure 2, measured were the applied load, and the displacements and the strains of the web, the upper flange and lower flange of the test specimens.

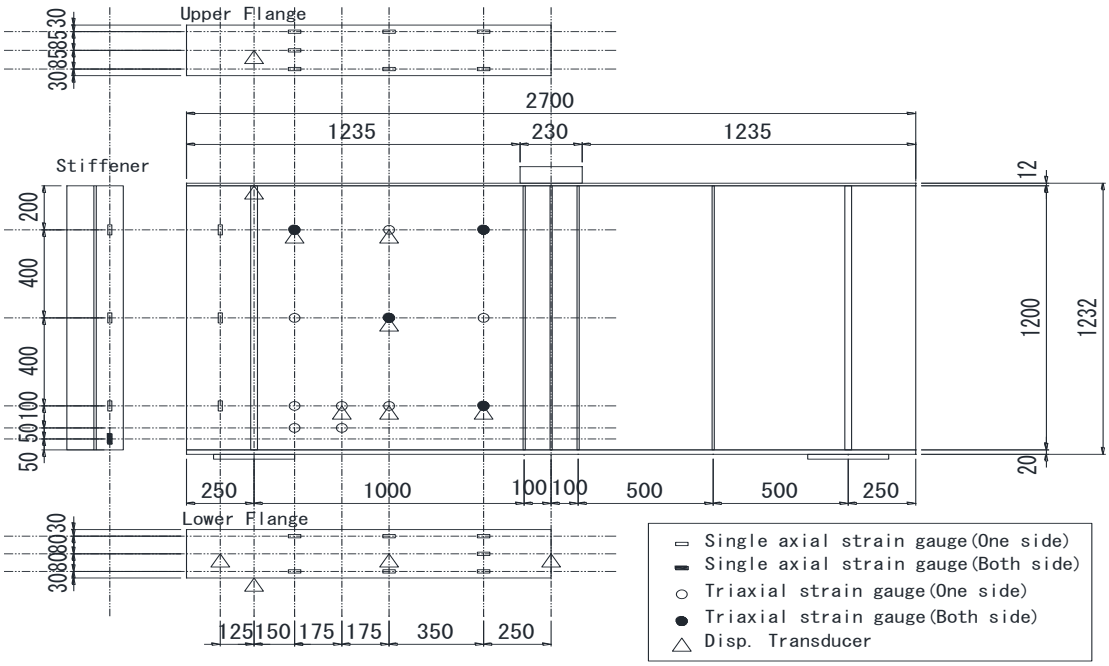

Figure 2: Measured location (mm)

3. TEST RESULTS AND DISCUSSIONS

3.1. Load - Displacement relation

Figure 3 shows the relationship between the applied load and the vertical displacement of the lower flange under the loading position. In addition, the maximum loads of the two test specimens are shown in Figure 3. It is understood that the maximum load of the corrosion damaged specimen is

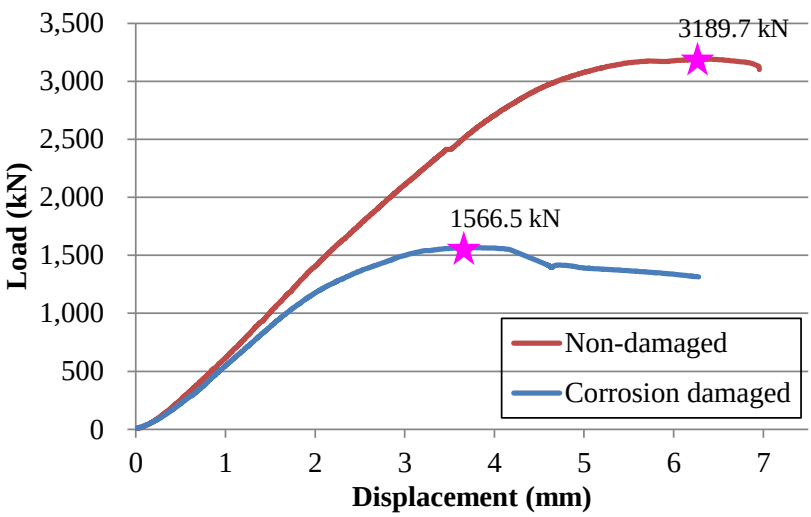

Figure 3: Relationship between applied load and vertical displacement

1566.5kN that is about 49% of that of the non-damaged specimen. Next, the flexural rigidity of two test specimens differ in the load around 500 kN. It is considered that the stiffness of the corrosion damaged specimen was less than that of the Non-damaged specimen because of the corrosion damage at the girder end.

3.2. Distortion

The principal distortions of the non-damaged specimen and the corrosion damaged specimen after the experiments are shown in Picture 3 and Picture 4 respectively. In the case of the non-damaged specimen, shear buckling occurred at the web panel. On the other hand, in the case of corrosion damaged specimen, the stiffener on the support was buckled at the center of the damaged area.

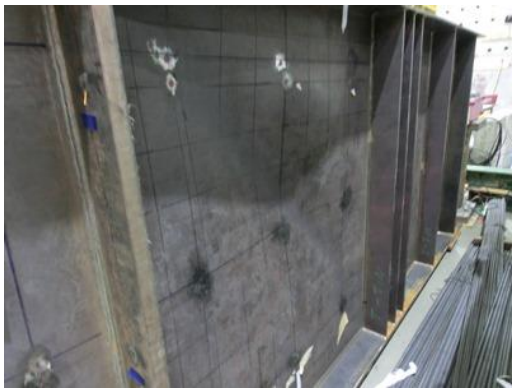

Picture 3: Distortion of the web of the Non-damaged specimen

Picture 4: Distortion of the stiffener on the support of the corrosion damaged specimen

3.3. Strain distribution

In order to investigate the stress distribution of the web of the test specimens, the principal strain was calculated from the triaxial strain gauges attached on the web. Figure 4 shows the distribution of the principal strain when the applied load was just before maximum load of the corrosion damaged specimen (1546 kN). A red line and a blue line in this figure show the minimum principle strain and the maximum principle strain respectively. In addition, the introductory notes express the scale to the size of strain at the lower left of this figure. As shown in Figure 4, in the case of the non-damaged specimen, the principal strain at the center of the web was the largest compressive strain in the direction of diagonal tension. On the other hand, in the case of the corrosion damaged specimen, the principal strain at the center of the web was occurred tensile strain in the direction of diagonal tension. It is considered that the stress transmission is different because the stiffener on the support of the corrosion damaged specimen was buckled, and the web near the stiffener on the support applied tensile stress.

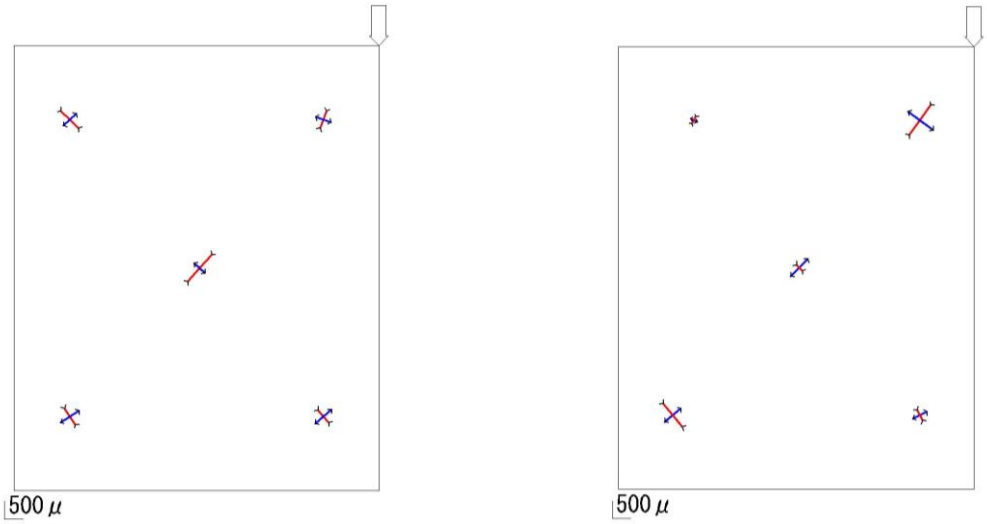

(a) Non-damaged specimen **(b) Corrosion damaged specimen**

Figure 4: Strain distribution at the load of 1546 kN

4. CONCLUSIONS

In this paper, in order to clarify the load carrying capacity of the steel girder with the corrosion damage at the girder end, the experiments has been executed compared with the non-damaged specimen and corrosion damaged specimen. The main conclusions obtained are as follows,

(1) In this study, it is understood that the maximum load of the corrosion damaged specimen is about 49% of that of the non-damaged specimen.

(2) The stiffness of the corrosion damaged specimen is different from that of the Non-damaged specimen because of the corrosion at the girder end.

(3) The buckled area is the web in the non-damaged specimen, and the stiffener on the support of the damaged area in the corrosion damaged specimen.

(4) The stress transmission of the steel girder with the corrosion damage at girder end is different from that of the intact steel girder.

REFERENCES

Japan Society of Civil Engineers (2009): Manual for Durability Verification of Corroded Steel Structures. (in Japanese)

Japan Road Association (2012): Specifications for highway bridges, Part2 steel bridges. (in Japanese)