LOW-CYCLE FATIGUE FAILURE MECHANISM OF WIND TURBINE FOUNDATION DUE TO VIBRATION OF UPPER STRUCTURE

K. YONETSU[1*], C. FUJIYAMA[2†]

[1] *Graduate School of Civil and Environmental Engineering, Hosei University, Japan*
[2]*Associate Professor of Civil and Environmental Engineering, Hosei University, Japan*

ABSTRACT

This paper investigates the failure mode of a foundation structure supporting a wind turbine tower subjected to a cyclic load using three-dimensional non-linear FE analyses. The model, incorporating a steel tower and reinforced concrete foundation, was made up mainly from solid elements. Anchor bolts were modeled using line elements.

First, static analysis was performed. Ultimate load at tower collapse was calculated as approximately 1000 kN. Next, dynamic analyses were carried out. Cyclic loads with constant amplitudes ranging from 30% to 60% of the ultimate load were applied to the top of the tower. Foundation failure occurred at 400 kN (40%). The cone-shaped failure starting at the anchor ring inside the reinforced concrete foundation was confirmed by strain contour and deformation. Next, failure processes of 400 kN and 600 kN loads were explored in detail. Finally, the relation between load and number of cycle at failure was shown as a simple diagram. It suggests that the wind turbine collapsed due to low-cycle fatigue.

Keywords: Wind Turbine, Fatigue Analysis, Dynamics, Low-cycle Fatigue, Cone-shaped Failure

1. INTRODUCTION

Wind energy is attracting attention from all over the world (Twidell and Gaudiousi 2011). Cumulative installed capacity climbed to 285,761 MW by the end of 2012 in 60 countries with the addition of 44,951 MW in new installations (NAVIGATION RESEARCH, 2013). In Japan, wind power using renewable energy has become a major industry (Ishihara et al. 2007). Recently, increasing wind energy production has been even more actively touted against the background of the Great East Japan earthquake and resultant nuclear power plant accident. At the end of 2012 in Japan, the total amount of installed wind energy capacity reached 2,614 MW and wind turbine installation grew by 19% compared with the previous year. However, in the past, Japan has had troubling experiences with wind turbines during typhoons (JSCE. 2010). Therefore, the aim of this

* Corresponding author and Presenter: Email: orcaa.apple@gmail.com

† Collaborator: Email: fujiyama@hosei.ac.jp

study is to investigate the failure mode of a wind turbine subjected to dynamic load by using an FE analysis that can trace stress-strain paths of concrete under high-cycle load (Maekawa et al. 2006).

2. ANALYSIS MODEL

2.1. Modeling

Fig. 1 shows a schematic of targeting wind turbine and its model for-analysis. Hub height of the model is 42 m. The tower and foundation are connected by 88 anchor bolts and an anchor ring. Because of symmetry, only half of the wind turbine is needed to be modeled. The model is made primarily from solid elements. Only the anchor bolts are modeled by line elements, with particular tension strains representing torque. To account for bond and friction between steel and concrete, interface elements are used between tower and foundation (Yasojima and Sakamoto 2012).

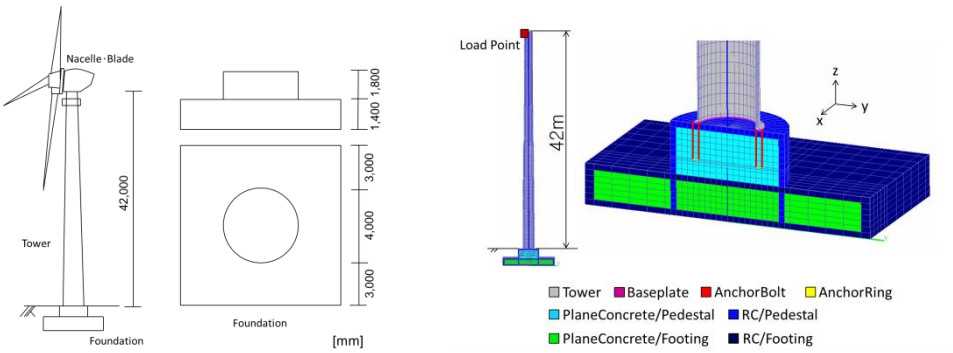

Figure 1: Schematic and model for analysis

Concrete strength of the pedestal and footing are 28.6 N/mm^2 and 29.3 N/mm^2, respectively. Yielding strength of the tower and anchor bolts are 400.0 N/mm^2 and 931.6 N/mm^2, respectively. The total dead weight of nacelle and blades are applied as a 650 kN axial force on the tower. The torque tightening the tower and foundation is 2.12 kN·m.

The bottom of the model was fully restrained in the vertical. The X-axis was restrained in a symmetrical cross section. In this study, it is assumed that the influence of elasticity of the ground can be ignored.

2.2. Static analysis

The reliability of the model was examined by reproducing past static analysis (Matsuo et.al, 2005). Matsuo gave the monotonic point load at the top of the tower horizontally by 3 cm per step by displacement control.

Fig. 2 shows the result of the static analysis in this study. The cone-shaped failure from the anchor ring was confirmed from principal strain contour and deformation. This means that the behavior of the anchor bolt affects the failure of the wind turbine. The failure process observed can be broken

down into steps (a) to (f), which are represented in the diagram of bending moment versus deflection angle of the bottom of the tower. The results agree with past research.

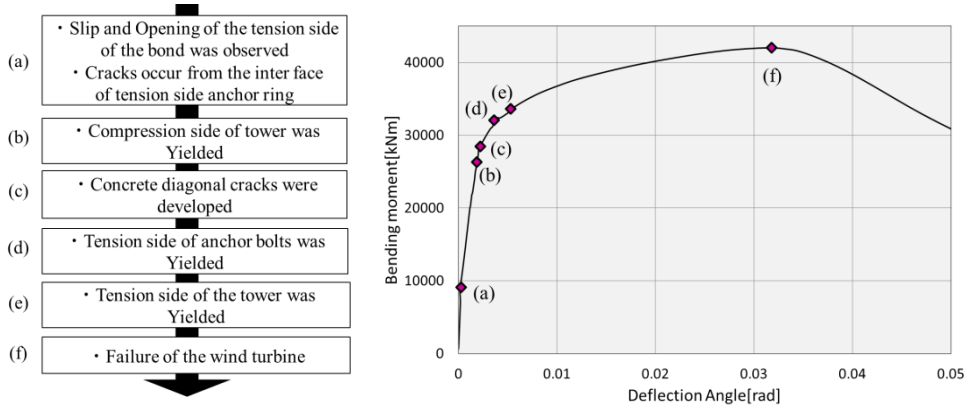

Figure 2: Failure process for static analysis

3. DYNAMIC ANALYSIS

To investigate the fatigue failure mode of the wind turbine, a cyclic dynamic load represented as a sine wave of constant amplitude was applied to the model.

3.1. Load condition

Cyclic horizontal load with constant amplitude was applied to the top of the tower. The amplitude was 30% to 60% of the ultimate load carrying capacity identified during static analysis, as shown in Table 1. The number of cycles in each trial was 100,000, and the period of the loading cycle was 1.0 seconds in all cases.

Table 1: Details of the dynamic load

Case	Load[kN]	Number of cycle[times]	period[sec]
I	300 (F_{static}30%)	100,000	1.0
II	400 (F_{static}40%)		
III	500 (F_{static}50%)		
IV	600 (F_{static}60%)		

3.2. Results of dynamic analysis

3.2.1. Bending moment – deformation

Fig. 3 shows the relation of the bending moment to deflection angle of the tower at the bottom. The deflection angle of the tower at applied tension side was adopted as an indicator. The deflection angle at an amplitude of 300 kN overwrote the same path during the whole load history, although deflection angles at amplitudes 400 kN, 500 N and 600 kN increased rapidly after particular load cycles. In other words, repetition of a load whose amplitude is over 40% of the ultimate load F_{static} could cause failure of the wind turbine.

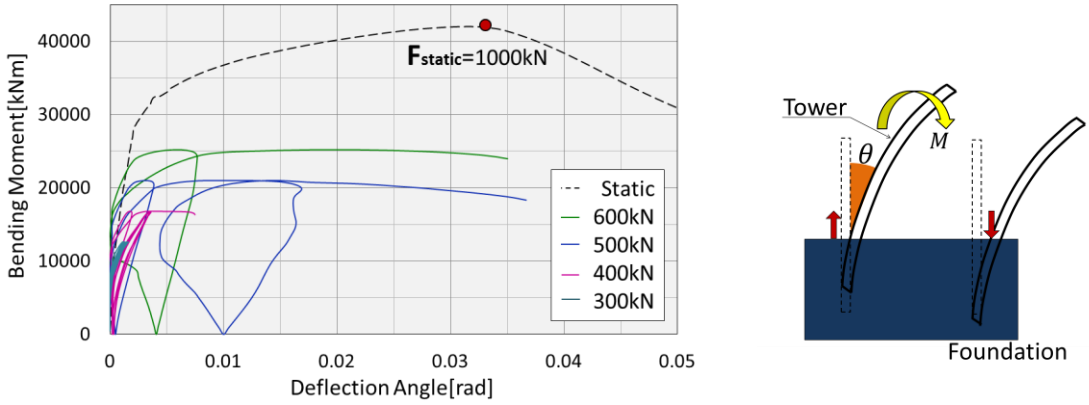

Figure 3: Relation of the bending moment to the deflection angle

3.2.2. Stress fluctuation of anchor bolt

Yielding of anchor bolts due to dynamic load was guessed by the relation of stress-step. In order to simplify the description, the location of an anchor bolt was defined using polar coordinates. The anchor bolt in the neutral area was defined as θ = 0 degrees. As well, tension side of the anchor bolt and compression side of the anchor bolt were defined as θ = 90 degrees and θ = -90 degrees, respectively (Fig. 4(c)).

The stress of anchor bolts at amplitudes 400 kN and 600 kN are shown in Fig. 4(a) and (b). For 400 kN, the order of yielding of the anchor bolts was 90 degrees, 0 degrees, -90 degrees (Fig. 4(a)). The anchor bolts yielded from tension side to compression side. On the contrary, for 600 kN, anchor yield of focused three anchor bolts coincided at the first loading.

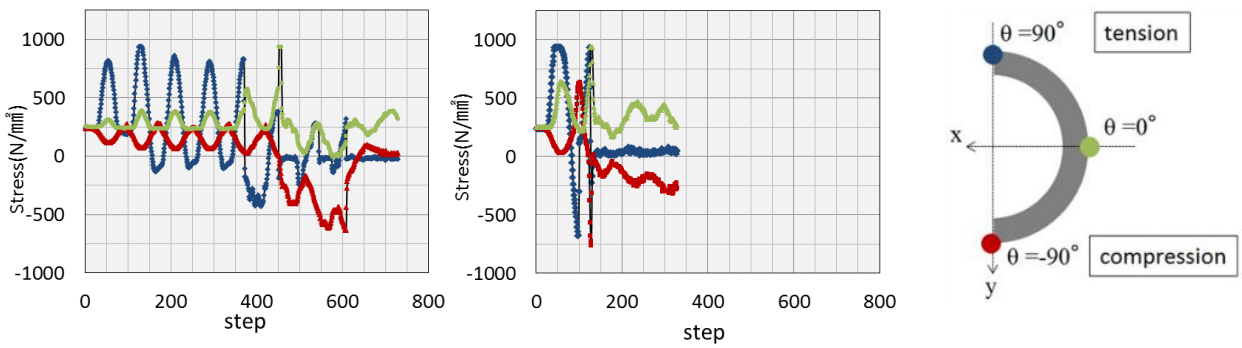

(a) 400kN amplitude **(b) 600kN amplitude** **(c) Coordinate of anchor bolts**

Figure 4: Stress of the anchor

3.2.3. Failure mode

The mechanism of failure was revealed in detail by strain contour and deformation of the foundation. First, failure mode at amplitude 400 kN was studied. Fig. 5(a) shows the contour of the principal strain and 10 times magnified deformation at the failure. The predominant strain areas were cone-shaped from the tip of the anchor ring to the top surface of the pedestal. The cone-shaped failure can be observed from the contour of shear strains shown in Fig. 5(b) as well. Fig. 5(c) shows

a 10 times magnified deformation of the foundation. At cycle number 28, the anchor ring at θ = 90 degrees looked like it was being pulled out. At cycle number 290, the anchor ring at θ = -90 degrees was pushed out. This behavior of the anchor ring could be due to the concrete fracture which was simulated by advanced dynamic analysis. We define this failure process as Mode I.

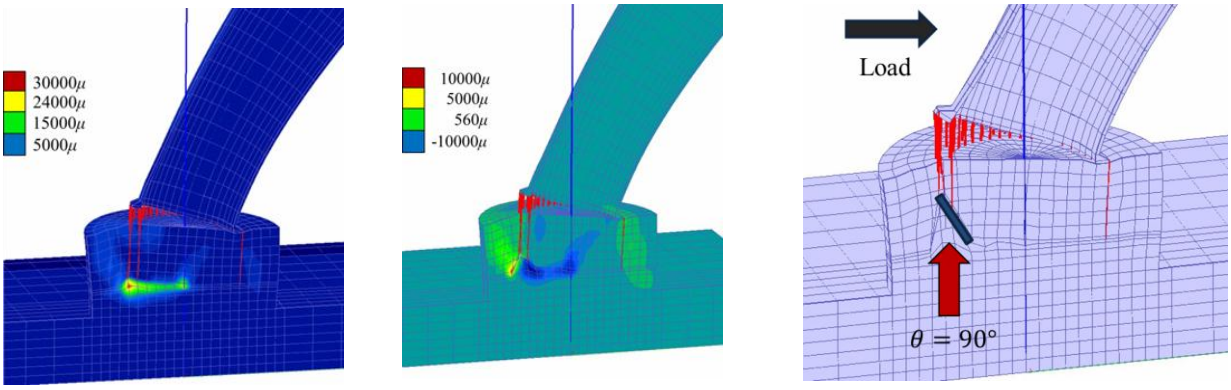

(a) Principal strain contour (b) Shear strain contour (c) Magnified deformation (disp. x50)

Figure 5: Strain contour and deformation of foundation for 400 kN at failure

Second, load amplitude 600 kN was studied. Cone-shaped failure similar to that of 400 kN was not clearly observed from principal strain contour, though it could be inferred from shear strain contour (Fig. 6(a), 6(b)). At 50 times magnified, just before the failure, at the first loading, the anchor ring at θ = 90 degrees looked like it was being pushed out, as shown in Fig. 6(c). During the following loading, the anchor ring at θ = 90 degrees was pulled out and the anchor ring at θ = -90 degrees was pushed out. This behavior of the anchor ring was caused by concrete fracture due to the dynamic load of tension and compression alternating. We define this failure process as Mode II.

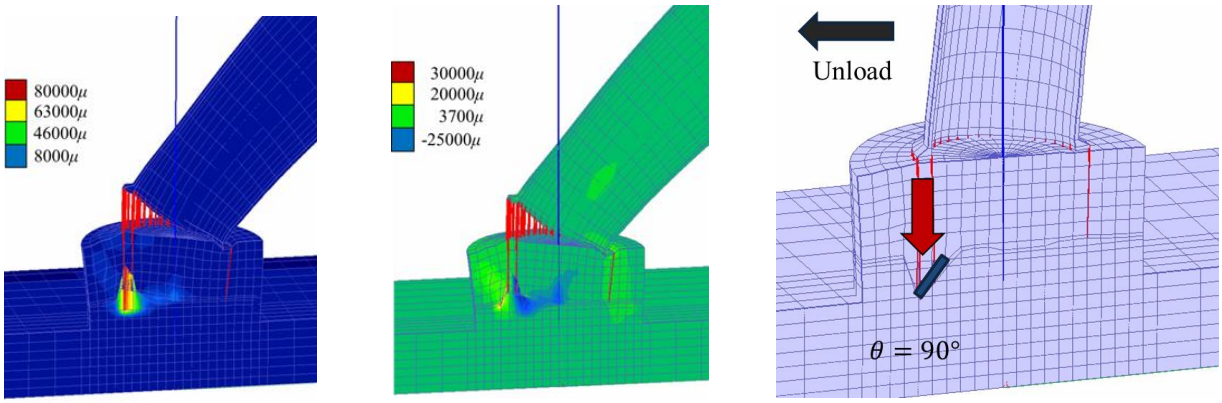

(a) Principal strain contour (b) Shear strain contour (c) Magnified deformation (disp. x50) (Just before failure)

Figure 6: Strain contour and deformation of foundation for 600kN at failure

3.2.4. Load – Number of cycle

The relation of load amplitude and number of cycles at failure are shown in Fig. 7. The area was separated into two that correspond to failure modes I and II. In dynamic and static load, the

relevance of the relation of the load and failure mode was not confirmed. Failure occurred in low-cycle fatigue at less than 100 cycles. However, with amplitude less than 400 kN, no number of cycles resulted in a collapse of the wind turbine. This suggests that wind turbine collapse during low-cycle fatigue requires a minimum threshold amplitude.

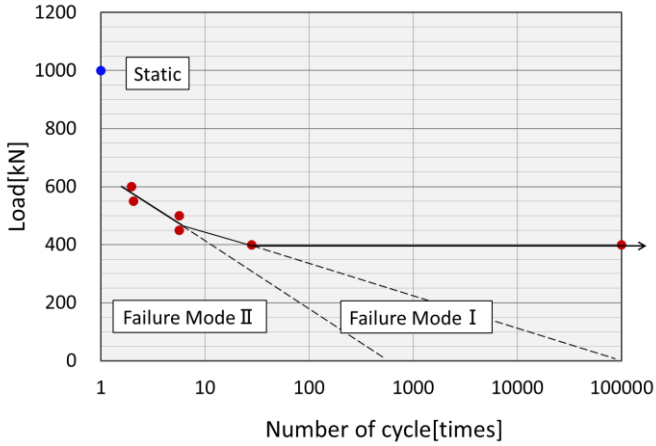

Figure 7: Load – Number of cycle

4. CONCLUSIONS

This study shows that a dynamic load over 40% of the ultimate static load could cause failure of a wind turbine in low cycle fatigue. The cone-shaped failure was confirmed from strain contour and deformation. Furthermore, failure mode of a wind turbine under dynamic load was classified as Mode I and II based on the process of the development of strains and deformations of the foundation. This therefore indicates that in order to predict failure of wind turbines, more attention should be devoted to development of cracks around the anchor due to cyclic loads. On the other hand, there was no collapse of the wind turbine with less than 40% of the ultimate static load under the conditions of this study. Further analysis considering resonance with the natural frequency and vibration mode of the tower are needed.

REFERENCES

A Yasojima and A Sakamoto (2012). A Study on Interface of Concrete and Round Steel, AIJ, No.23039 [Japanese]

Japan Society of Civil Engineers (2010). Guideline of Wind Turbine Supporting Structure. pp.455-495 [Japanese]

J Twidell and G Gaudiosi (2011). Offshore Wind Power, pp.172-177

K Maekawa, K Toongoenthong, EG Gebreyouhanned and T Kishi (2006). Direct Path-Integral Scheme for Fatigue Simulation of Reinforced Concrete in Shear, ACT, Vol4, No.1, pp.159-177

NAVIGANT RESEARCH (2013). World Market Update 2012 International Wind Energy Development Forecast 2013-2017

T Ishihara, P. H Sukegawa, K Shimada, T Ohyama (2007). A study on the dynamic response of a semi-submersible floating offshore wind turbine system, ICWE12 CAIRNS

T Matsuo, T Kanazu, K Takahara and T Mekaru (2005). A Study on Facture Behavior of Wind Turbine Foundation by Typhoon, JCI, Vol.27, No.2