THE COMPARISON OF THE SEISMIC PERFORMANCE OF BRBF AND EBF BRACED STRUCTURES WITH IRREGULARITY IN HEIGHT

Ardeshir DEYLAMI[*1] , Mostafa FEGHHI[**]

[*] *Professor, Civil and Environmental Engineering Department, Amirkabir University of Technology ,Iran*

[**] *Msc. of Structural Engineering, Tafresh University, Iran*

ABSTRACT

Today, the traditional approach of designing buildings based on providing sufficient stiffness and strength is changed to a modern approach which has an important role in the absorption and dissipation of energy. Using details on the energy dissipation in structures considerably reduce the amount of materials used in the structure and therefore improve the structural behavior, technical standards and economic justification. Steel structural systems with buckling restrained (BRBF) and (EBF) braces seem appropriate for this purpose. This study examines the seismic behavior of steel braced frames BRB and EBF in structures having irregularity in height, considering their Response Modification Factors. The basic approach of this research is the study of plasticity effects on the resistance of structures through structural capacity curves using the change in the number of structural floors and the change in BRB bracing system including chevron V and chevron-inverted V. The seismic response of the studied systems is obtained by non-linear static analysis using software PERFORM-3D. The results showed a small difference between the calculated R factor and the existing codes for structures with irregularity in height.

Keywords: Buckling Restrained Braced Frame, Eccentrically Braced Frame, Response Modification Factor, Irregularity in Height.

1. INTRODUCTION

In the design of structures, earthquake damages control and deformation control should be considered. In fact, the Life Safety for occupants in a severe earthquake should be considered. Thus, if the structure is designed in such way to remain elastic in severe earthquakes, it will not be reasonable economically. On the other hand, Structural design is done elastically, meanwhile the structure presents non-linear behavior in severe earthquakes and these two are inconsistent. Accordingly, today the design philosophy of buildings is based on the principle that the structure should stay against small earthquake in elastic area. It should enter the non-linear area in medium and severe earthquakes. So there is a need to non-linear analysis for designing structures. But because these analyses are complex, time-consuming and costly so seismic codes use another approach. After obtaining base shear force by linear analysis, they reduce it by dividing on a coefficient called Response Modification Factor and design the structure for a less resistance. But they allow the structure to enter the non-linear area to dissipate the earthquake energy.[1,2]

[1] Corresponding author: Email:deylamia@aut.ac.ir

2. DETERMINING THE DESIGN FORCE USING CAPACITY SPECTRUM

The Response Modification Factor is a parameter which provides the structural plasticity to absorb earthquake energy and delays in the demolition of structures on earthquake. With this attitude, Earthquake Codes allowed the structure designing with less force, but they accepted larger displacements. The Response Modification Factor (R) depends on different factors. Some of these factors are the ductility capacity, non-elastic behavior of structure materials and constituents and overstrength by applying different reliability coefficients for design purposes. But some researchers showed that two factors of overstrength factor and reduction factor due to ductility have the most effect on the Response Modification Factor. So Response Modification Factor (R) is defined as function of Reduction factor due to ductility R_μ and overstrength factor R_S as follows:

$$R = R_\mu R_S \tag{1}$$

There is a difference between the design codes for allowable Stress state and the ultimate strength. This difference enters into equation (1) by allowed stress coefficient. The allowed stress coefficient is the ratio between force in forming the first plastic hinge V_S and the allowed stress force V_w .

$$Y = \frac{V_S}{V_W} \tag{2}$$

The probable value and the mean of allowed stress coefficient is about 1.4 to 1.5.

$$R_W = \frac{V_e}{V_w} = \frac{V_e}{V_y} \times \frac{V_y}{V_S} \times \frac{V_S}{V_w} = R_\mu . R_S . Y \tag{3}$$

We assume that the capacity curve and Idealized bilinear response graph of a structure is like that of figure (1) [3]:

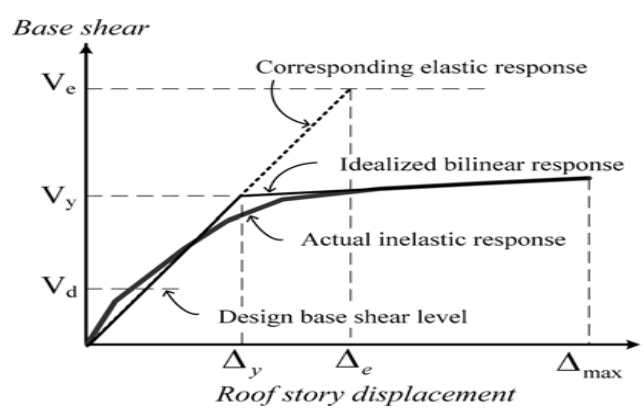

Figure 1: General structure response [3]

According to the above figure, due to ductility, the building has a capacity to dissipate the earthquake energy. Because of this capacity, the elastic design force (v_e) can be reduced to the yield strength level.

$$R_\mu = \frac{V_e}{V_y} \quad (4)$$

The reduction factor due to ductility depends on different factors such as ductility attenuation, the fundamental period of structure, soil type, hysteresis behavior and system characteristics. Miranda and Bertero refer to the following equation to determine reduction factor due to ductility which is used in this study [4].

$$R_\mu = \frac{\mu-1}{\varphi} + 1 \geq 1 \quad (5)$$

$$\varphi = 1 + \frac{1}{T(12-\mu)} - \frac{2}{5T}\exp[-2(\mathrm{Ln}\,T - 0.2)^2] \quad (6)$$

Where, T is the fundamental period and μ is the structural ductility factor defined as:

$$\mu = \frac{\Delta_{max}}{\Delta_y} \quad (7)$$

The structural ductility factor in equation (7) is the result of division of the maximum displacement in an plastic behavior by the yield displacement in an perfectly elastic behavior. The maximum relative story displacement limit (drift) was selected based on the Iranian Standard Code No. 2800 as follows [5]:

(a) For the frames with the fundamental period less than 0.7 s:

$$T \leq 0.7_S \quad \rightarrow \quad \mathrm{Drift} \leq 0.025 \quad (8)$$

(b) For the frames with the fundamental period more than 0.7 s:

$$T > 0.7_S \quad \rightarrow \quad \mathrm{Drift} \leq 0.02 \quad (9)$$

T is the fundamental period and H is the height.

The storage resistance which is between true submit level of structure and the level of forming the first plastic hinge for different reasons, is defined by overstrength factor. The following equation is offered for overstrength factor

$$R_S = R_{S_0} R_1 R_2 \quad (10)$$

$$R_{S_0} = \frac{V_y}{V_S} \quad (11)$$

Where R_{S_0} is the nominal overstrength factor and its value is equal to the ratio of base shear of the whole submit limit of structure to base shear such as forming the first plastic hinge in the structure.

R_1 is the ratio of real stress in nominal stress and its value is recommended about 1.05. R_2 Is the added strength at yields from the increase of change in relative forms and its value is recommended 1.1.[6]

3. BUCKLING RESTRAINED BRACED FRAME SYSTEM

Two features of high ductility and deformation control are so important in the design and execution of steel structures. The steel moment frame system which is used in three forms of high (special), intermediate and ordinary ductility provides a good to relatively good ductility for the structure, but they have the problem of extreme displacement of structures in severe earthquakes. Concentric braced frames (CBF) were used to reduce the excessive displacement and to strengthen the structures against wind and earthquake forces. The main problem was that the bracing members alternatively subjected to tension and compression. They show asymmetric hysteresis behavior in compression and tension, which cause limited performance due to the buckling of members.

Because of the mentioned advantages for braced systems and the importance of improving the disadvantages, researchers presented a structural system having appropriate ductility features of moment frame and stable hysteretic behavior in which the braces do not buckle against high forces (Figure 2). This new brace system called Buckling Restrained Brace (BRB) [7].

Buckling restrained brace constitutes of a steel core which is surrounded by a steel pod or other materials and there is mortar in this pod (Figure 3). The main feature of this system is that the pod which surround the core delays the buckling mode and does the submit mode which has a high ductility. In designing a part of BRB, we assume that axial forces are tolerated only by the core and the external pod acts as a lateral inhibition to prevent the Buckling of brace. Thus buckling strength of the core is more than the flowing strength of the core. This allows the core to flow in both pressure and tension. Therefore Energy absorption of this braces increases significantly. In summary it can be said that the main aim of Buckling Restrained Brace is the avoidance of compression buckling of current braces [8].

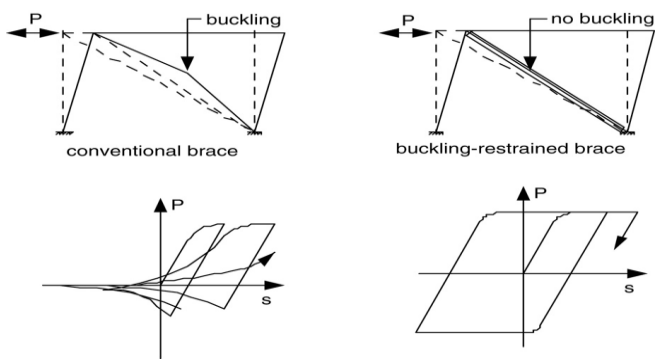

Figure 2: Behavior of conventional brace and BRB[7]

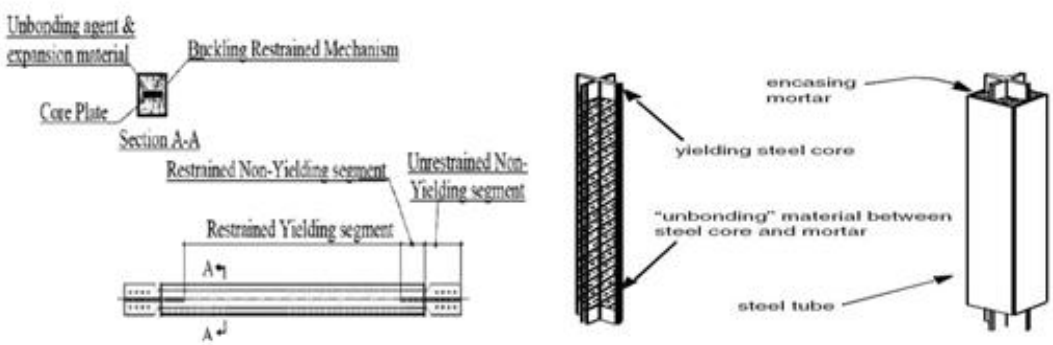

Figure 3: Configuration of a typical buckling-restrained brace [8]

4. THE ECCENTRICALLY BRACED FRAME (EBF) SYSTEM:

In this system a part of the beam length located between brace head and column or between two brace heads is called link beam. The link beam performs like a shapeable fuse and absorbs a large amount of seismic energy. EBF system is a combination of braced frame and moment frame system. In this system two factors of ductility and stiffness combine together. Ductility is the main factor of moment frames and stiffness is the main factor of typical conventional braced frames [9].

5. THE STUDIED MODELS

To consider the non linear behavior of structures with irregularity in height, the Response Modification Factor which shows the relationship between linear and non-linear behavior of the structure should be evaluated. To assess the Response Modification Factor (and reduction factor due to ductility and the overstrength factor) a series of models of structures having irregularity in height with 6, 9, 12, and 15 stories were considered (the irregularity of structure is shown in figure(4). At the ground level, each model has 6 bays to 5 bays of 6 m (figure 4). Two series of models of structures with dual system of intermediate moment frames and buckling restrained brace frames are studied with two different arrangements of bracing including chevron V and chevron-inverted V. Another series of model were also studied with intermediate moment frame and EBF brace arranged in form of chevron-inverted V. The length of spans was 6 meters, the height of floors was 3 meters and the length of link beam was 2 meters.

The models of structures were analyzed and designed by software ETABS with an assumed Response modification factor based on FEMA-450[6] and Iranian Earth quake Resistance Design Code [5]. Then the external frame of these models was extracted and modeled using software PERFORM-3D. According to FEMA-356, the structure is computed by the nonlinear statistic (pushover) analysis as for the mentioned Response modification factor. Then using the capacity curve and bi-linear model of structure, the new Response modification factor was obtained (Figures 3 to 5).

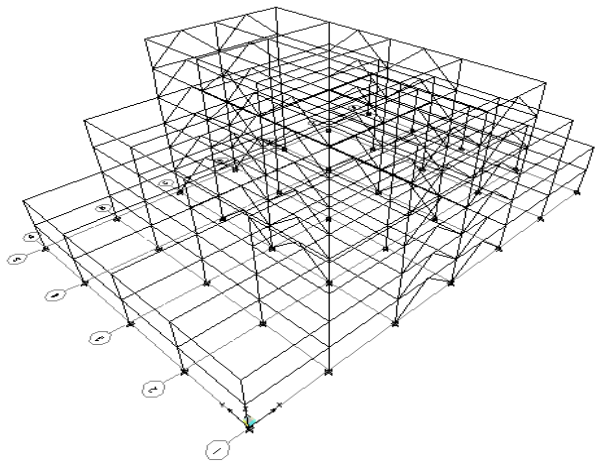

Figure 4: 3D picture of 6floors structure with BRB

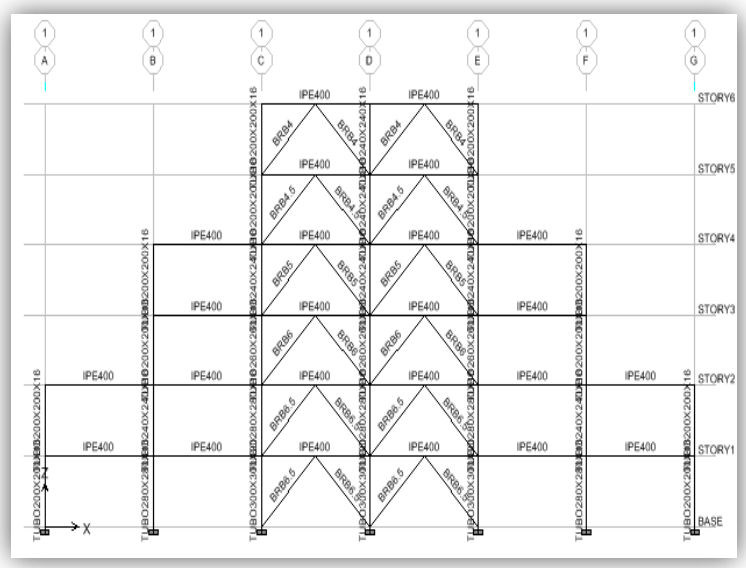

Figure 5: 2D picture of the 6BRB-IV

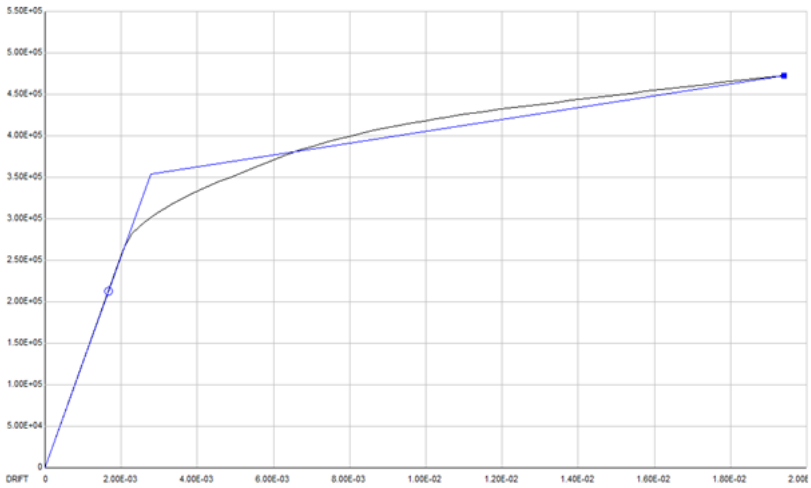

Figure 6: the capacity curve for model 6BRB-IV

Table 1: the results of the capacity curve and the bi-linear model of 6BRB-IV

Unit: t-cm	V_S	V_y	R_{S_0}	R_S	T	Δ_y	Δ_{max}	μ	φ	R_μ	R	R_W
	268	354	1.32	1.525	0.6901	4.986	34.92	7	0.98	7.71	10.86	15.64

6. RESULTS OF NUMERICAL ANALYSIS

Sample of the capacity curve and bi-linear model of structure for model 6BRB-IV is shown in the following section (Figure 4). An example of computed results is also showed in table (1). The calculated values of the overstrength factor, reduction factor due to ductility and the Structural Response Modification Factor are presented by table (2). Table (3) shows the mean values of Structural Response Modification Factor for different systems

Table 2: the values of Structural Response modification factor

Unit : Ton-cm	R_S	R_u	R	R_W	PREAMBLE
6 BRB-IV	1.525	7.71	10.86	15.64	6 Story BRB frame with inverted-v brace
9 BRB-IV	1.52	6.36	9.8	14.11	9 Story BRB frame with inverted-v brace
12 BRB-IV	1.475	6.32	9.1	13.1	12 Story BRB frame with inverted-v brace
15 BRB-IV	1.47	4.74	7.94	11.43	15 Story BRB frame with inverted-v brace
6 BRB-V	1.63	6.84	11.41	16.44	6 Story BRB frame with v brace
9 BRB-V	1.567	6.65	10.65	15.34	9 Story BRB frame with v brace
12 BRB-V	1.524	6.24	8.44	12.16	12 Story BRB frame with v brace
15 BRB-V	1.445	6.15	5.94	8.55	15 Story BRB frame with v brace
6 EBF-IV	1.617	4.56	6.14	8.85	6 Story EBF frame with inverted-v brace
9 EBF-IV	1.573	4.25	5.91	8.51	9 Story EBF frame with inverted-v brace
12 EBF-IV	1.547	3.74	5.63	8.1	12 Story EBF frame with inverted-v brace
15 EBF-IV	1.54	3.72	5.48	7.9	15 Story EBF frame with inverted-v brace

Table 3: Mean values of Structural Response modification factor for different systems

In this research	R	R_W
Inverted-v-BRB	9.425	13.57
V-BRB	9.11	13.11
Inverted-v-EBF	5.79	8.34

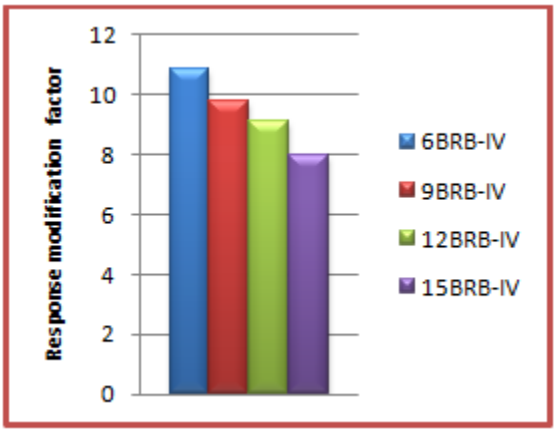

Figure 7: the comparison of R factors in models BRB-IV

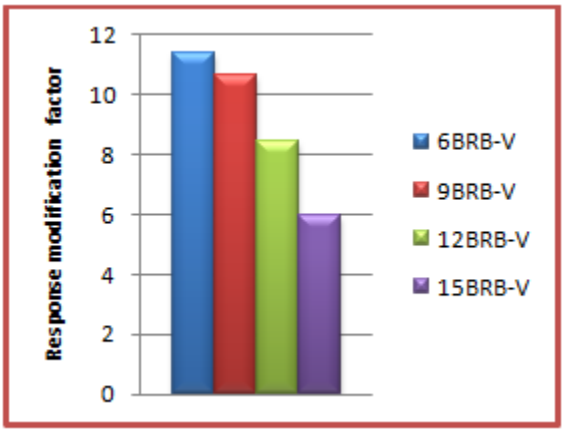

Figure 8: the comparison of R factors in models BRB-V

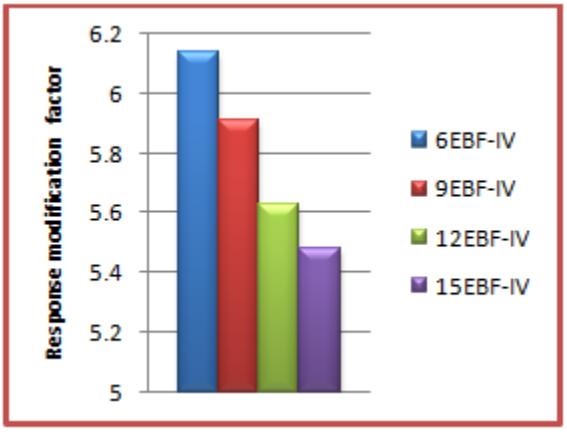

Figure 9: the comparison of R factors in models EBF-IV

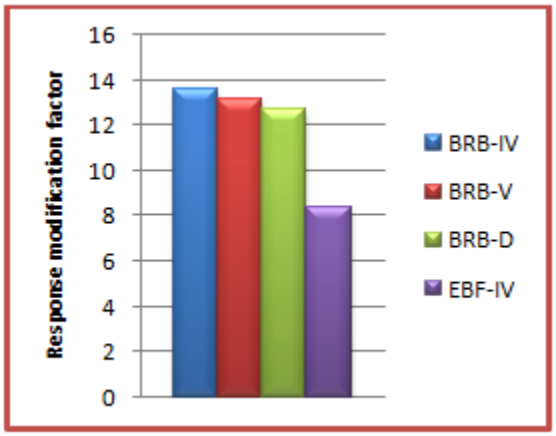

Figure 10: the Response modification factors average (Rw)

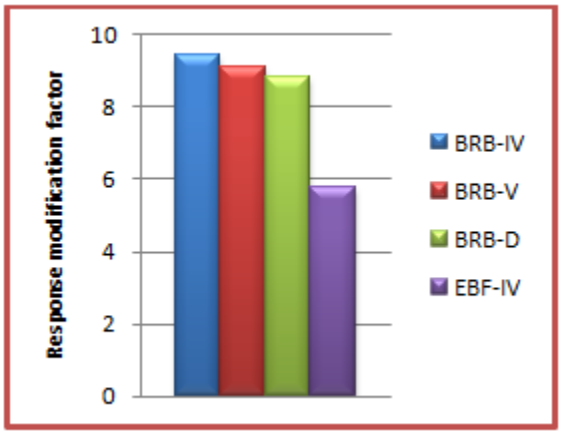

Figure 11: the Response modification factors average (R)

7. CONCLUSION

1. As the number of stories increase, the Response modification factors decrease.
2. The Response modification factors for different models with BRB vary between 9< R <9/5 which is slightly higher than the values proposed by American codes (AISC and SEAOC). AISC and SEAOC suggest R= 8 for the Response modification factor for braced systems with BRB and R=9 for dual systems with BRB and moment frame. Meanwhile FEMA-450 introduces the values of R=7 and R=8 for Response modification factor respectively for the above-mentioned systems.
3. The Response modification factors of structures with irregularity in height do not differ much from that of the regular structures.
4. Frames with chevron - inverted-V brace have higher Response modification factor and ductility than frames with chevron-V braces.
5. The Response modification factors of models with EBF are less than that of the models having BRB. This indicates the higher ductility of BRB systems than EBF ones.

REFERENCES

[1] Taghinejad R (2009) Seismic design based on the performance level using Pushover analysis – SAP 2000,ETABS, University Book Publ., IRAN.

[2] Abbasnia R, Mirshahi E (2001) Identifying and comparing different methods for calculating the behavioral coefficients of building. Proceedings of the Second International Conference on Tall Buildings, IRAN.

[3] Mahmoudi M, Zaree M (2010) "Evaluating response modification factors of concentrically braced steel frames", Journal of constructional steel research 66, 1196-1204.

[4] ATC (1995). “Structural response modification factors”, ATC-19 Report, Applied Technology Council, Redwood City, California

[5] BHRC (2005) Iranian code of practice for seismic resistance design of buildings; Standard no. 2800. 3rd ed. Building and Housing Research Center. Tehran.

[6] FEMA (2003) NEHRP Recommended provisions for seismic regulations for new building and structures, FEMA450 Washington D.C.

[7] Qiang Xie (2004) " State of the art of buckling-restrained braces in Asia", Journal of constructional steel research ,.

[8] Asgarian B, Shokrgozar H.R (2009) "BRBF response modification factor", Journal of constructional steel research 65(2),290-298.

[9] zhendekci D. O, zhendekci N. O (2007) "Effects of the frame geometry on the weight and inelastic behavior of eccentrically braced chevron steel frames", Journal of constructional steel research,.