HIGHER MODE EFFECTS ON THE SEISMIC RESPONSES OF HIGH-RISE CORE-WALL BUILDINGS

P. WARNITCHAI[1*†] and MUNIR A.[2]

[1]*School of Engineering and Technology, Asian Institute of Technology, Thailand*
[2]*NationalEngineering Services of Pakistan, Pakistan*

ABSTRACT

In the conventional seismic design of high-rise RC core wall buildings, the design demands such as design shear and bending moment in the core wall are typically determined by the Response Spectrum Analysis (RSA) procedure, and a plastic hinge is allowed to form at the wall base to limit the seismic demands. In this study, it is demonstrated by using a 40-story core wall building that this conventional approach could lead to an unsafe design where the true demands—the maximum inelastic seismic demands induced by the maximum considered earthquake (MCE)—could be several times greater than the design demands and be unproportionately dominated by higher vibration modes. To identify the cause of this problem, the true demands are decomposed into individual modal contributions. The results show that the true demands contributed by the first mode are reasonably close to the first-mode design demands, while those contributed by other higher modes are much higher than the corresponding modal design demands. The flexural yielding in the plastic hinge at the wall base can effectively suppress seismic demands of the first mode. For other higher modes, however, a similar yielding mechanism is either not fully mobilized or not mobilized at all, resulting in unexpectedly large contributions from higher modes. This finding suggests several possible approaches to improve the seismic design and to suppress the seismic demands of high-rise core wall buildings.

Keywords: tall buildings, seismic design, higher modes effects, modal pushover analysis, nonlinear response history analysis.

1. INTRODUCTION

Concrete core walls are commonly used as a lateral-force-resisting system in high-rise buildings as they offer advantages of lower costs, faster construction, and more open and flexible architecture compared to other lateral-force-resisting systems. A typical lateral framing system for high-rise buildings of this type consists of a central core wall, peripheral columns and, in some cases, outriggers connecting between the core wall and the columns. As the core wall is generally much

* Corresponding author: Email: pennung.ait@gmail.com

† Presenter: Email: pennung.ait@gmail.com

stiffer than the peripheral columns, the lateral load in buildings, particularly those without outriggers, is mostly resisted by the core wall. For economic reasons these buildings are not designed to remain elastic under either the design basis earthquake (DBE) or the maximum considered earthquake (MCE). Flexural plastic hinge is normally allowed to form at the base of the core wall under such severe ground shakings, but the plastic rotation in the hinge zone must be within an acceptable limit and the wall above the hinge zone is expected to remain elastic (Priestley et al. 2007; Panagiotou and Restrepo 2009).

Due to the long-period nature of the structures, a significant contribution to seismic responses from higher vibration modes is expected. Therefore, the response spectrum analysis (RSA) procedure, which accounts for multi-mode effects, is commonly used in the seismic design of high rise core wall buildings. In the RSA procedure, the elastic responses of each vibration mode are first determined from the DBE response spectrum at 5% damping ratio and then combined into the total elastic responses by either the SRSS or the CQC method, and finally reduced to the seismic demands for structural design by a response modification factor "R" that accounts for the overstrength and inelastic effects of the structure (ICBO 1997).

Recently, studies on a 60-story and a 40-story RC core wall building in high seismic areas show clearly that the RSA procedure greatly underestimates the seismic demands along the entire height of the core wall under both DBE and MCE (Klemencic et al. 2007; Zekioglu et al. 2007). In these studies, non-linear response history analysis (NLRHA) was carried out as part of the performance-based seismic design to verify the seismic demands estimated by the RSA procedure. The base shear demand and the mid-height bending moment of core wall under MCE ground motions computed by the NLRHA procedure are about 3 to 5 times of those obtained from the conventional RSA procedure; the base shear demand is as high as 15-20% of the total building weight. Such high shear and bending moment demands are likely to create several design problems and difficulties. If the designer follows the RSA procedure, he might end up with an unsafe design of the building. On the other hands, if the correct but high seismic demands from the NLRHA procedure are used, the design might lead to uneconomically thick wall with a very high amount of steel reinforcement and expensive foundation structures to withstand very large lateral loading, etc. It is therefore crucial to understand why the seismic demands are such high and why the RSA procedure fails to predict the demands. The improved understanding could lead to more effective design of measures to reduce the seismic demands to acceptable levels.

One critical assumption in the RSA procedure is that elastic responses of each and every vibration mode can be proportionally reduced into the inelastic seismic demands by the same response modification factor "R". Some studies on multi-mode inelastic seismic demands in tall buildings and wall structures, however, shows that this is not always valid, and several new procedures to estimate such demands more accurately have been proposed. For example, Eibl and Keintzel (1988) who first identified this issue proposed a concept called "modal limit force", where shear force demand in each mode of a cantilever wall structure is limited by the yield moment at the base.

In this study, the reason(s) for high seismic demands in high-rise RC core wall buildings and the failure of the RSA procedure are investigated using a case study building. The study will enable us to gain a greater insight into this important problem, and may lead to an improved seismic design as well as a more effective control of high seismic demands for this type of structures.

2. THE CASE STUDY BUILDING

A high rise RC core wall building is selected as a case study building. Two levels of earthquake ground motions—DBE and MCE—are considered. MCE or the maximum considered earthquake is defined as the ground shaking level at the building site with a 2% probability of exceedance in 50 years, while DBE or the design basis earthquake is the level with a 10% probability of exceedance in 50 years and is assumed to be two-thirds of MCE. The case study building is assumed to be located in a high seismic hazard area equivalent to the seismic zone 4 of the 1997 Uniform Building Code (ICBO 1997). The seismic demands for design are computed from the DBE response spectrum by the RSA procedure, and are used in the capacity design of the structure to ensure the achievement of a predetermined plastic mechanism. The building designed by this conventional design procedure is expected to be able to withstand MCE without collapse. Hence, the seismic demands in the core wall of the building under MCE is finally evaluated by the NLRHA procedure and compared with the design basis demands by the RSA procedure. This comparison will demonstrate the validity of the RSA procedure.

The case study building is a 415-ft tall, 40-story residential tower with a typical story height of 10 ft and a lobby-level height of 20 ft. It has three levels of below-grade parking with 10 ft story height and a thick foundation slab resting on a firm stratum. The surrounding soil condition can be classified as 'stiff soil' equivalent to the soil type S_D in the UBC 97. The lateral framing system consists of a central RC core wall and 14 peripheral columns, whereas the gravity load carrying system consists of 8-in-thick post-tensioned concrete flat slabs resting on the peripheral columns and the central core. A typical floor plan is shown in Figure 1. This building was designed by Magnusson Klemencic Associates and ARUP using the Los Angles Tall Buildings Structural Design Council's Alternative Design Procedure for Tall Buildings (Klemencic 2007), and hence the arrangement, configuration, dimensions, and specified material strength of key structural components such as core wall, columns, slabs, etc. are considered to be reasonable and realistic for such a tall building in a high seismic hazard zone.

3. DESIGN SEISMIC DEMANDS

The RSA procedure in the UBC 97 is adopted here in this study. This is because the UBC 97 has been widely used as a model code for seismic design of buildings in many countries and the RSA procedure in its successor, the International Building Code, is almost identical to that of the UBC 97. In this procedure it is first required to determine the properties of all significant vibration modes. A three dimensional linear elastic finite element model of the case study building is then created

and analyzed using the ETABS version 9.0.0 software. A modal analysis is undertaken to obtain the natural periods, mode shapes and modal mass participation factors for the first six translational modes in each principal horizontal direction (X and Y). With these six vibration modes about 98 percent of the participating mass of the building is attained in each direction. The calculation of seismic demands using these modal properties is limited to the X direction, which is considered to be sufficient for the purpose of this study.

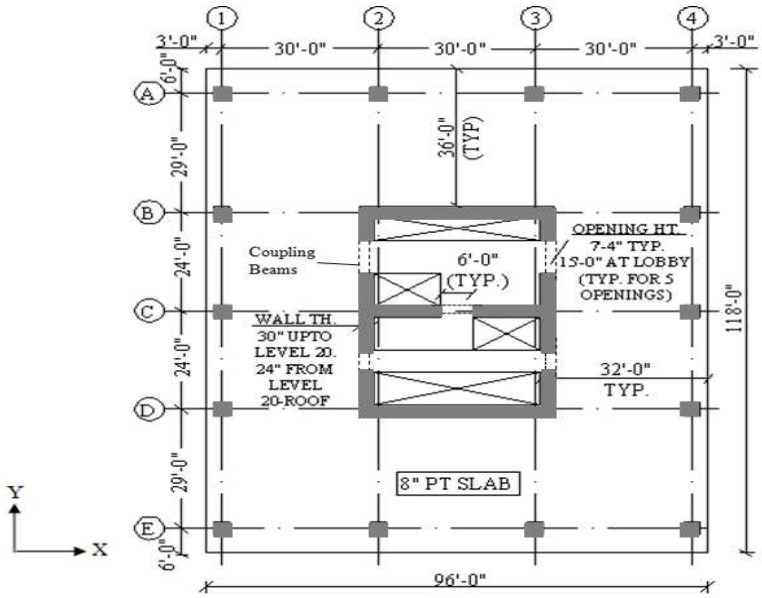

Figure 1. Plan of the case study building (Klemencic 2007)

The design spectrum in this RSA procedure is the elastic response spectrum at 5% damping ratio of DBE in seismic zone 4 on soil type S_D. By this procedure elastic responses of all significant vibration modes are first determined from the design spectrum, combined into the total responses, and then reduced to the seismic demands for design by the response modification factor 'R'. The 'R' factor of 5.5 is selected as the case study building can be classified as a 'building frame system with concrete shear walls'. It is also required that the base shear demand (or design base shear) must not be less than 90 percent of the design base shear determined by the static force procedure. To satisfy this requirement, it is necessary to replace the R factor of 5.5 by an effective response modification factor R_{eff} of 4.0. With this new R_{eff} factor, the seismic demands are computed for the first six vibration modes, and are combined by the CQC method into the total seismic demands for design. The computed design seismic demands—design shear and moment demands of the core wall over its entire height—are illustrated in Figure 2.

The obtained design demands are then utilized in the capacity design of the building structure. A kinematically admissible plastic mechanism suitable for a tall building with a central core wall is first selected. In this mechanism, a ductile plastic hinge is allowed to form only at the base region of the core wall. The amount and distribution of longitudinal steel reinforcement of the core wall in the base region (levels 0-5) are determined such that its nominal flexural strength times the

strength-reduction factor (ϕ) of 0.9 is approximately equal to the design base moment. The calculation of this nominal flexural strength also takes into account the effects of gravity loads using the UBC-97 load combination rules. The transverse and other reinforcement detailing in these plastic hinge regions are set according to the UBC-97 detailing provisions. All other portions of the core wall and all other structural elements (columns, slabs, etc.) are assumed to have sufficiently high strengths to remain elastic during when a ductile plastic hinge is formed in the predetermined location. No attempt at this stage is made to determine the required strengths in all these elements, but they will be determined later by the NLRHA procedure in the following section.

4. TRUE SEISMIC DEMANDS

Actual maximum seismic responses of the case study building under MCE or "true seismic demands" are best estimated by the NLRHA procedure. For this purpose, it is necessary to have a set of ground motion records that can represent MCE. Here, the MCE response spectrum is assumed to be 1.5 times the DBE response spectrum. Seven free-field horizontal ground motion records whose spectra resemble the target MCE spectrum are selected from the PEER NGA and COSMOS databases. Each record is at first scaled by a constant such that its spectrum roughly match with that of MCE, and then slightly modified by a software package named RSPMATCH 2005 (Hancock et al. 2006) to finally obtain accurate spectral matching with MCE.

A nonlinear model of the case study building for NLRHA is created in Perform 3D version 4. The portion of core wall expected to remain elastic (level 5 up to the roof) is modeled by elastic shear wall elements. For the plastic hinge region (levels 0 to 5), core wall is modeled by a large number of concrete and steel vertical fiber segments. A bilinear hysteretic model of non-degrading type is used for the steel fiber. The post-yield stiffness is set to 1.2 percent of the elastic stiffness. The yield strength of steel bars is assumed to be 1.17 times its nominal (design) yield strength to account for the material overstrength. For the same reason, the compressive strength of concrete is set to 1.3 times the nominal (design) strength. Columns and slabs are modeled by elastic column and slab/shell elements, respectively. The foundation slab is assumed to be firmly fixed to the rigid ground where the input ground motions are introduced. The geometric nonlinearity (P-Δ) effects are also accounted for. The modal damping ratios of the first six translational modes are set to 1.0% (first mode), 1.4%, 2.0%, 2.7%, 3.8%, and 5.3% (6th mode). These damping ratios are considered to be more realistic than the 5% value typically assumed in the design (CTBUH 2008).

With this nonlinear building model, nonlinear time history analyses are performed for seven input MCE ground motions applied in the X direction. Plastic hinge is, as expected, formed at the base region of core wall. For each input motion, the maximum shear and bending moment at every floor level of the core wall are determined. The results from all seven input motions are then compared, and the upper-bound, mean, and lower-bound values of these responses are computed and plotted against the height of the building as shown in Figure 2. These responses are true seismic demands

of the inelastic structure when subjected to MCE ground motions, and they are compared with the design seismic demands (as explained in Section 3) in this Figure.

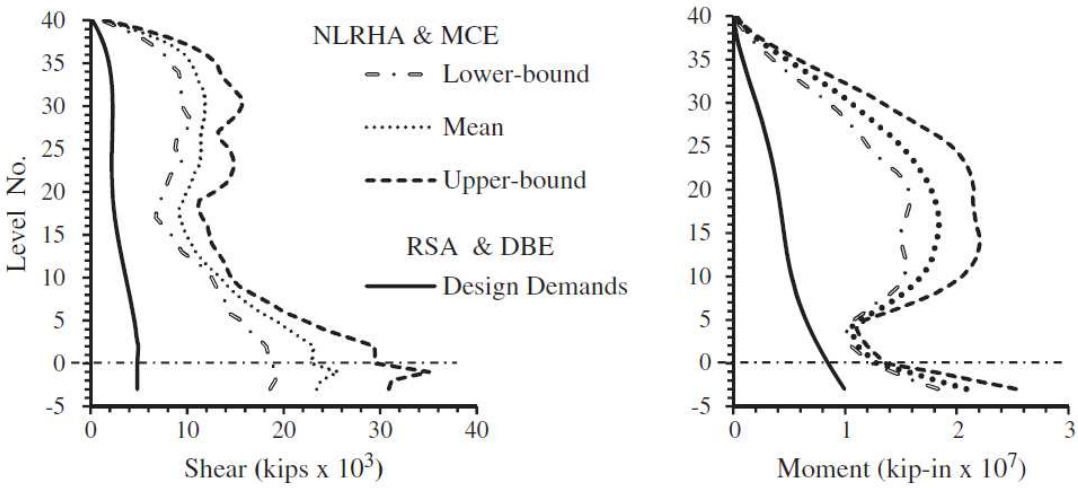

Figure 2. Comparison between design seismic demands in the core wall from the RSA procedure and true seismic demands from the NLRHA procedure

It is clear that the 'true' seismic demands are much higher than the design seismic demands over the entire height of the core wall, and their distribution patterns are markedly different. The mean base shear demand is as high as 5 times the design base shear, and is approximately 25% of the total seismic dead load of the building. Similarly, the mean bending moment demand at the wall's mid height is as high as 5 times the corresponding design moment. In the base region of core wall where flexural yielding occurs, the mean moment demand is about 1.5 times the design moment. This ratio of 1.5 is essentially the overstrength factor resulting from the higher material strengths than nominal design values and the strain hardening effect of steel reinforcement. All these results are in general agreement with the study by Klemencic et. al (2007).

There are many possible reasons contributing to this striking difference between 'true' seismic demands and design demands. Firstly, the 'true' seismic demands are computed from MCE ground motions, which are 1.5 times of DBE motions used for determining the design demands. Secondly, the realistic modal damping ratios of 1% to 5% in the nonlinear building model are generally lower than the traditional 5% damping ratio for every mode in the RSA procedure. Thirdly, the overstrength in plastic hinge zones leads to an overall increase in both moment and shear demands by a factor of about 1.5. All these three factors, however, still could not explain this striking difference between true demands and design demands (Munir and Warnitchai 2012). A more in-depth analysis is therefore required to gain further insight into this issue.

5. MODAL DECOMPOSITION OF INELASTIC SEISMIC RESPONSES

One effective way to understand complex dynamic responses of a structure is to decompose the responses into the contributions from each vibration mode. Several methods have been developed

for modal decomposition of inelastic responses. In this study, a method called 'uncoupled modal response history analysis (UMRHA) procedure' is adopted. This procedure was developed by Chopra and Goel (2002) and was simplified into the MPA procedure. Certain adjustments have been carried out in this study to make the UMRHA procedure applicable to the case study building (Munir and Warnitchai 2012).

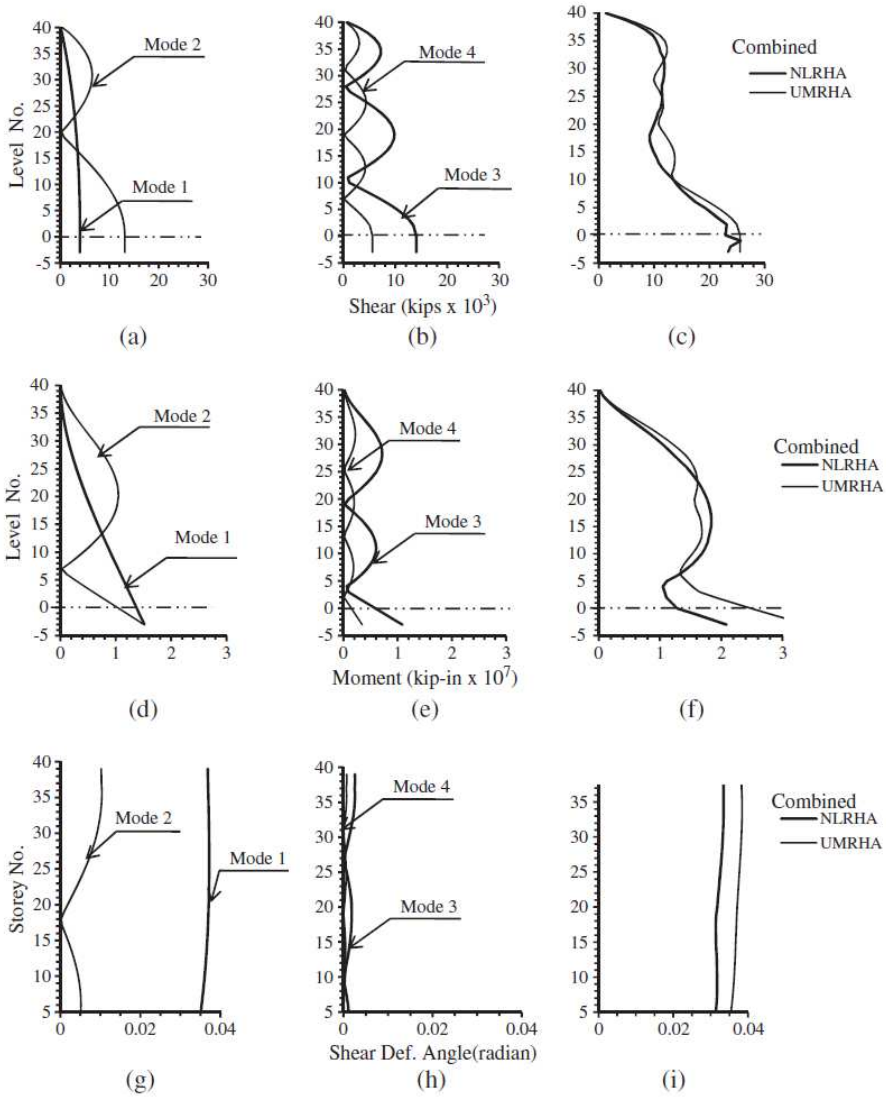

Figure 3. Mean modal responses of the case study building to MCE and their combination. (a-c) Mean Shear (d-f) Mean Moment (g-i) Mean shear deformation angle

By using the UMRHA procedure, the modal responses of the case study building to each of the seven MCE ground motions can be determined. Only the first four modes are considered since the contributions from other higher modes are found to be insignificant. The sum of these four modal responses is therefore expected to approximately match with the response computed by the NLRHA procedure. To confirm this point, for each input MCE motion the resulting four modal responses at each floor level are combined in time domain into the total response time history. The seismic demand at that floor by the input motion is then determined as the highest positive response

throughout the entire time history. This calculation process is repeated seven times for seven different input MCE motions, and the mean seismic demand by these motions is determined and is compared with the corresponding mean seismic demand computed by the NLRHA procedure in Figure 3.

The comparisons shown in Figure 3(c), (f), and (i) are made for three different types of seismic demands—shear force in the core wall, bending moment in the core wall, and story racking (shear) deformation angle of the exterior zone outside the core wall. The story racking deformation (β) angle is the conventional story drift ratio (θ) subtracted by the floor inclination angle measured clockwise from a horizontal plane. This β angle is a measure of in-plane shear deformation of partition panels spanning between the core wall and perimeter columns (CTBUH 2008). The comparisons show clearly that the mean shear and moment demands in the core wall and the mean racking angle demand computed by the UMRHA procedure match well with those obtained from the NLRHA procedure, and thus confirming the reasonableness of the UMRHA procedure.

The racking angle demand throughout the entire height of the building is found to be completely dominated by the first mode (Figure 3 g,h), while the shear demand is dominated by the second and third modes (Figure 3 a,b), and the moment demand is contributed more or less equally by the first three modes (Figure 3 d,e). The results also show that the contribution from the second mode, as well as other higher modes, attains its highest values and zero values at certain heights; these heights are the locations of anti-nodes and nodes of the modal response.

6. VALIDITY CHECKING OF THE RSA PROCEDURE

The validity checking is made by comparing three different types of seismic demands. The first type is 'MCE modal demand', which is defined as the contribution of a vibration mode to the total inelastic seismic demand caused by an MCE ground motion. This demand represents the true seismic demand in the structure by the most severe earthquake. The second type is 'DBE elastic modal demand', which is the elastic response of a vibration mode to a DBE ground motion. This demand is computed from the DBE elastic response spectrum at 5% damping ratio. The third type is 'modal design demand', which is set equal to the DBE elastic modal demand divided by R_{eff}. The square root of square sum of modal design demands from all significant vibration modes is equal to the 'design demand' of the RSA procedure. Therefore, the RSA procedure is considered valid if the modal design demand is sufficiently close to the MCE modal demand.

All these three types of seismic demands in the core wall are compared in Figure 4. Note that the MCE modal demands presented here are computed from one MCE record. For the first mode, the comparison shows that the MCE modal shear and moment demands are close to, though slightly higher than, the corresponding modal design demands. Their ratio is about 1.5 throughout the entire height. On the other hand, for other higher modes the MCE modal demands are several times higher than the corresponding modal design demands, indicating the invalidity of the RSA procedure for such cases.

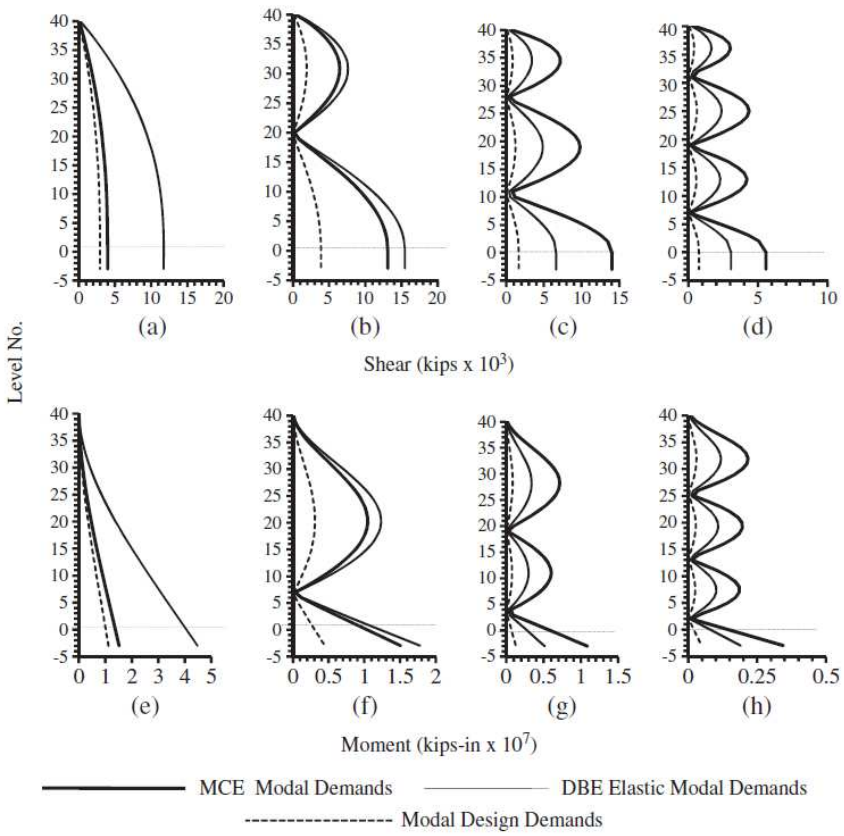

Figure 4. Comparison of modal shear and moment (elastic, design, and MCE demands)

Based on the above findings, it can be concluded that the use of a large reduction factor (R_{eff}) to reduce DBE elastic demands into design demand in the RSA procedure is valid only for the first mode and is invalid for other higher modes. A further analysis by Munir and Warnitchai (2012) shows that an effective yielding mechanism to limit seismic demands occurs in the first mode, but is not fully mobilized in the second mode and is not mobilized at all for the third and fourth modes. The conventional design concept that relies on only one plastic hinge at the wall base region to limit inelastic seismic demands over the entire core wall is found to be ineffective. This new understanding also suggests several possible measures to effectively reduce the seismic demands. For example, one might allow plastic hinges to form at several selected locations along the wall height, not just at the base. This is in line with the dual plastic hinge concept—one hinge at the base and another at the mid height of the wall—proposed by Panagiotou and Restrepo (2009). These selected locations could be the anti-nodes of modal moment of the targeted modes, and the flexural yielding strengths at these locations could be set to appropriate levels so as to create effective yielding mechanisms in these modes. Another possible measure is to add passive energy absorbers such as viscous dampers or buckling restrained braces into the building. These devices could be specifically designed to dampen down the targeted modes so as to keep the seismic demands within acceptable limits. By decomposing the inelastic seismic responses into their modal contributions, the design of such passive control devices could be made in an effective manner.

7. CONCLUSIONS

For high-rise core-wall buildings, the conventional seismic design, where design demands are determined by the RSA procedure and plastic deformation in the core wall is designed to be mainly concentrated at the base region, could lead to an unsafe design. The maximum shear and bending moment demands along the height of core wall under MCE ground motions could be several times greater than the design demands. The use of a large 'R' factor to reduce elastic demands into design demands in the RSA procedure is found to be valid for the case study building only for the first mode and invalid for other higher modes. The yielding at the core base region is only effective in limiting seismic demands of the first mode. This finding provides new insights into complex inelastic responses of high-rise core wall buildings and suggests several possible approaches to improve the seismic design and to suppress the seismic demands of these structures.

REFERENCES

Chopra AK and Goel RK (2002). A modal pushover procedure for estimating seismic demands for buildings. Earthquake Engineering and Structural Dynamics. 31, pp. 561-582.

CTBUH (2008). Recommendations for the Seismic Design of High-rise Buildings. A Consensus Document—CTBUH Seismic Working Group.

Eible J and Keintzel E (1988). Seismic Shear Forces in RC cantilever walls. Proceeding of Ninth World Conference on Earthquake Engineering, Tokyo, Kyoto, Japan (Vol.VI).

Hancock J, Watson-Lampray J, Abrahamson NA, Boomer JJ, Markatis A, Mccoy E, and Mendis R (2006). An improved method of matching response spectra of recorded earthquake ground motion using wavelets. Journal of Earthquake Engineering. 10(1), pp. 67-89.

International Conference of Building Officials (1997). Uniform Building Code, 1997, Vol. 2. Whittier, CA.

Klemencic R, Fry A, Hooper JD, and Morgen BG (2007). Performance based design of ductile concrete core wall buildings-Issues to consider before detail analysis. Structural Design of Tall and Special Buildings. 16, pp. 599-614.

Munir A and Warnitchai P (2012). The cause of unproportionately large higher mode contributions in the inelastic seismic responses of high-rise core-wall buildings. Earthquake Engineering and Structural Dynamics. 41(15), pp. 2195-2214.

Panagiotou, M., and Restrepo, J., I. (2009). Dual-plastic hinge design concept for reducing higher-mode effects on high-rise cantilever wall buildings. Earthquake Engineering and Structural Dynamics. 38, pp. 1359-1380.

Priestley MJN, Calvi GM, Kowalsky MJ (2007). Displacement-Based Seismic Design of Structures. IUSS Press.

Zekioglu A, Wilford M, Jin L, and Melek M (2007). Case Study using The Los Angeles Tall Buildings Structural Guidelines: 40-Storey Concrete Core Wall Building. Structural Design of Tall and Special Buildings. 16, pp. 583-597.