Upper Bound of a Loop Gain in a Power Inversion Adaptive Array

A loop gain is an important parameter in a power inversion adaptive array. The upper bound value of the loop gain is obtained which prevents the array suppressing a desired signal seriously. This result is very useful for determining the loop gain.

I. INTRODUCTION

A power inversion adaptive array [1, 2] is useful in mobile communication systems because it does not require information about the desired signal arrival angle. A least mean squares (LMS) adaptive array [3, 4] uses a reference signal instead of arrival angle information. Consequently, the power inversion adaptive array is much easier to implement than the LMS adaptive array. The power inversion adaptive array, however, works in such a way that it nulls any strong signal. Thus, if the desired signal is strong, it is suppressed. The desired signal suppression depends highly on an array loop gain as well as on the desired signal power. When an interference signal is not present, the signal suppression problem is most serious. The problem may be circumvented by decreasing the loop gain. However, since a lower value of the loop gain yields a poorer interference suppression performance, it is important to choose an appropriate value for the loop gain. In this paper, we obtain the upper bound of the loop gain which keeps the output signal-to-noise ratio (SNR) above the required value when no interference signal is present. This is very useful for determining the loop gain.

Manuscript received July 21, 1982; revised May 17, 1983.

II. UPPER BOUND OF LOOP GAIN

Consider an N-element power inversion adaptive array as shown in Fig. 1. Note that Fig. 1 is illustrated using complex-valued quantities. We assume for simplicity that

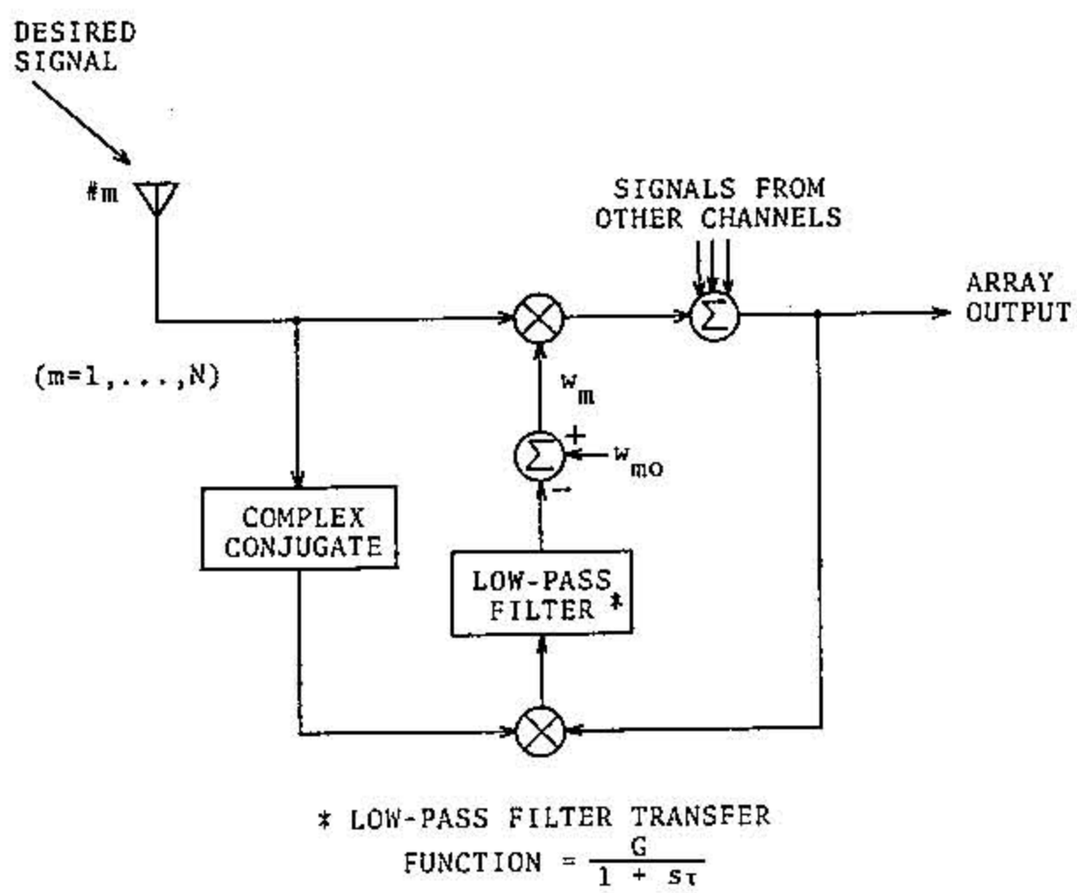

Fig. 1. Power inversion adaptive array.

each element is isotropic and that all mutual impedances are zero. Furthermore, we assume that each offset weight w_{mo} (a complex constant) is given as follows:

$$w_{mo} = \begin{cases} 1 & \text{for} \quad m = 1 \\ 0 & \text{for} \quad m \neq 1 \,. \end{cases} \tag{1}$$

We express an N-dimensional offset weight vector as W_o, i.e.,

$$W_o = [w_{1o} \quad w_{2o} \quad \cdots \quad w_{No}]^{\mathrm{T}} \tag{2}$$

where T denotes transpose.

We assume that only a narrowband desired signal and thermal noise are present in the array. We express the desired signal power per element as P_d. Moreover, we assume that thermal noise components on different elements are independent and that they have the same power P_n.

Let ϕ_m be a phase of the desired signal on the mth element. We define an N-dimensional phase vector V_d as

$$V_d = [\exp(j\phi_1) \quad \exp(j\phi_2) \quad \cdots \quad \exp(j\phi_N)]^{\mathrm{T}} \,. \tag{3}$$

We express the complex weight for the mth element as w_m and the N-dimensional weight vector as W, i.e.,

$$W = [w_1 \quad w_2 \quad \cdots \quad w_N]^{\mathrm{T}} \,. \tag{4}$$

Since the covariance matrix of the desired signal is $P_d V_d^* V_d^{\mathrm{T}}$, it is easily seen that the steady-state weight vector is given by

$$W = \{I + G\,(P_d V_d^* V_d^{\mathrm{T}} + P_n I)\}^{-1} W_o \tag{5}$$

where the asterisk and the I denote complex conjugate and an $N \times N$ identity matrix, respectively [1].

By using the matrix inversion identity [5], the output SNR is given by

$$\text{output SNR} = P_d\,|V_d^{\mathrm{T}} W|^2 / P_n\, W^{\mathrm{T}} W^* = \frac{(g+1)^2 S}{N(N-1)g^2S^2 + 2(N-1)g(g+1)S + (g+1)^2} \tag{6}$$

where $S = P_d/P_n$, the desired signal-to-noise ratio per element (input SNR), and $g = G\,P_n$, the normalized loop gain.

As may be seen from (6), in a case where no interference signal is present, it is desirable that the loop gain g is low. This is because lower values of g prevent the array from nulling the desired signal. Lower values of g, however, yield poorer interference protection [1]. Then it is important to obtain the upper bound of the loop gain which produces the required minimum output SNR when no interference signal is present.

Let the required minimum output SNR be A. Then

$$\text{output SNR} \geq A \tag{7}$$

must hold. In order to simplify the calculation, we introduce h defined as

$$h = g/(g+1)\,. \tag{8}$$

It is easily seen that h is a monotone increasing function of g and that $0 < h < 1$ holds since $g > 0$.

Solving (7) with respect to h by use of (6) and (8), we obtain the following results:

(1) When $S \leq A$, (7) does not hold for $h > 0$. This means that when $S \leq A$, the required minimum output SNR is not achieved for any loop gain.

(2) When $S > A$, the upper bound of h is given by

$$h_u = \frac{1}{NS}\left\{-1 + \sqrt{\frac{NS-A}{(N-1)A}}\right\}. \tag{9}$$

If $h_u < 1$, the corresponding value of g, i.e.,

$$g_u = h_u/(1-h_u) \tag{10}$$

is the upper bound of the loop gain.

If $h_u \geq 1$, there is no finite upper bound of g. This means that any value of the loop gain is allowable to achieve the output SNR $\geq A$.

Equation (10) is the upper bound of g for a given input SNR. Now we consider the upper bound of g over a given dynamic range of the input SNR. Assume that the input SNR varies from S' to S''. Also, assume that $S' > A$ holds. Then (7) must be satisfied for $S' \leq S \leq S''$. Consequently, the lowest value of g_u for $S' \leq S \leq S''$ is the allowable upper bound of the loop gain over the whole dynamic range of the input SNR. Differentiating (9) by S, it is seen that h_u is a unimodal function of S so long as $S > A$. Let h_u' and h_u'' be the values of h_u which correspond to S' and S'', respectively. Furthermore, let g_u' and g_u'' be the values of g_u which correspond to S' and S'', respectively. If any positive value of the loop gain is allowable for the input SNR $= S'$, we simply express $g_u' = \infty$. Similarly, if there is no finite upper bound of g for the input SNR $= S''$, we express $g_u'' = \infty$. Then, since h_u is the unimodal function of S, the lower value of either h_u' or h_u'' is the upper bound of h_u for $S' \leq S \leq S''$. Moreover, since h is the monotone increasing function of g, the lower value of either g_u' or g_u'' is the upper bound of the loop gain over a given dynamic range of the input SNR.

Let the loop gain be the upper bound value. Then the best interference protection is realized under the constraint that the required minimum output SNR is achieved in a case where an interference signal is absent.

Fig. 2 shows the upper bound of g as a function of the input SNR for several values of N. This figure

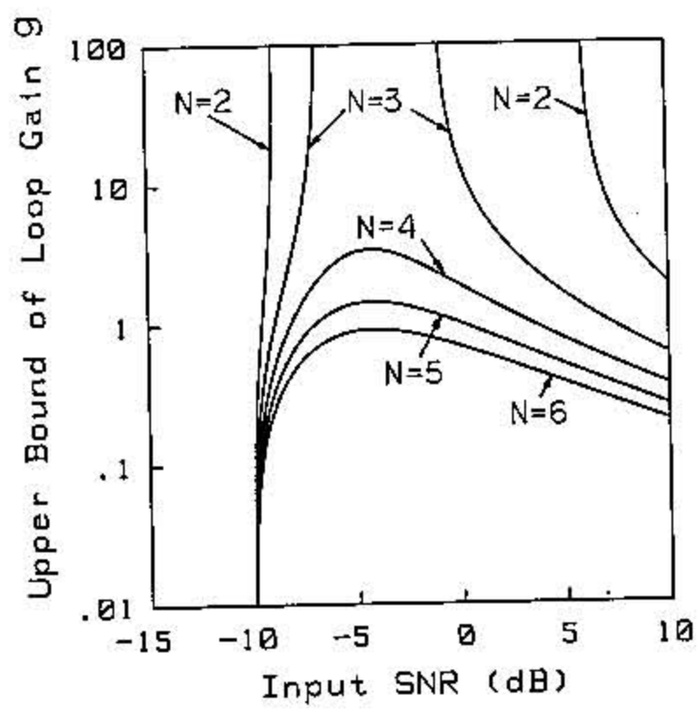

Fig. 2. Upper bound of loop gain g. $A = -10$ dB (no interference).

assumes $A = -10$ dB. From these curves, the upper bound of g is easily obtained. Assume, for example, $N = 4$ and the input SNR varies from -5 dB to 10 dB. The upper bound of g for the input SNR $= -5$ dB is 3.30. And the one for the input SNR $= 10$ dB is 0.357. Thus 0.357 is the upper bound of the loop gain which keeps the output SNR above -10 dB over the whole dynamic range of the input SNR in situations where no interference signal is present.

III. CONCLUSIONS

We have obtained the upper bound value of the loop gain in a power inversion adaptive array. This result is very useful for determining the loop gain.

YASUTAKA OGAWA

MANABU OHMIYA

KIYOHIKO ITOH

Department of Electronic Engineering
Hokkaido University
Sapporo 060 Japan

REFERENCES

[1] Compton, R.T., Jr. (1979)
The power-inversion adaptive array: Concept and performance.
IEEE Transactions on Aerospace and Electronic Systems, AES-15, 6 (Nov. 1979), 803–814.

0018-9251/83/0900-0779 $1.00 © 1983 IEEE

[2] Zahm, C.L. (1973)
Application of adaptive arrays to suppress strong jammers in the presence of weak signals.
IEEE Transactions on Aerospace and Electronic Systems, AES-9, 2 (Mar. 1973), 260–271.

[3] Widrow, B. et al. (1967)
Adaptive antenna systems.
Proceedings of the IEEE, 55, 12 (Dec. 1967), 2143–2159.

[4] Compton, R.T., Jr. (1978)
An adaptive array in a spread spectrum communication system.
Proceedings of the IEEE, 66, 3 (Mar. 1978), 289–298.

[5] Monzingo, R.A., and Miller, T.W. (1980)
Introduction to Adaptive Arrays.
New York: Wiley, 1980, p. 511.