Approximate Scalar Finite-Element Analysis of Anisotropic Optical Waveguides with Off-Diagonal Elements in a Permittivity Tensor

MASANORI KOSHIBA, SENIOR MEMBER, IEEE, KAZUYA HAYATA, AND MICHIO SUZUKI, SENIOR MEMBER, IEEE

Abstract —An approximate scalar finite-element program for the analysis of anisotropic optical waveguides having a permittivity tensor with nonzero off-diagonal elements is described. In this approach, the nonphysical spurious solutions which are included in the solutions of the earlier vectorial finite-element method in an axial-components formulation do not appear. Numerical examples on an anisotropic dielectric rectangular waveguide composed of a uniaxial medium are given. Our results for the waveguide whose optic axis lies in the plane (xy-plane) normal to the direction (z-axis) of propagation agree well with the results of the vectorial wave analysis using the variational method. We also demonstrate the application of this approach by analyzing the anisotropic dielectric rectangular waveguide whose optic axis lies in the xz- or yz-plane.

I. Introduction

SEVERAL METHODS FOR the analysis of a three-dimensional optical waveguide such as shown in Fig. 1 (where t is the height or depth and W is the width) have been proposed [1] and the vectorial finite-element method in an axial components ($E_z - H_z$) formulation, which enables one to compute accurately the mode spectrum of a waveguide with arbitrary cross section, is widely used [2]–[8]. However, the vectorial finite-element solutions have been known to include nonphysical solutions [2]–[8]. If one wants to compute a set of eigenmodes, it is difficult and very cumbersome to distinguish between the spurious and the physical modes of the guides. The cause of these spurious modes is believed to be in the indefinite nature of the $E_z - H_z$ variational formulation [6]–[8]. In addition, the vectorial finite-element method can be applied only to anisotropic waveguides with a diagonal permittivity tensor [3], [7].

Recently, Steinberg and Giallorenzi [9] have formulated an approximate coupled mode treatment based on the Marcatili method [10] for a uniaxial waveguide whose optic axis lies in the xz-plane, and Ohtaka [11] has analyzed a uniaxial waveguide whose optic axis lies in the xy-plane using the variational method. Mabaya, Lagasse, and Vandenbulcke [7] have presented an approximate scalar finite-element formulation for the analysis of isotropic optical waveguides. This approach has as its main advantages: the smaller matrix dimensions, less computer time, no spurious modes (because functionals based on the scalar approximation are positive definite [7]), and the capability of easily computing higher order modes [7], [12], [13].

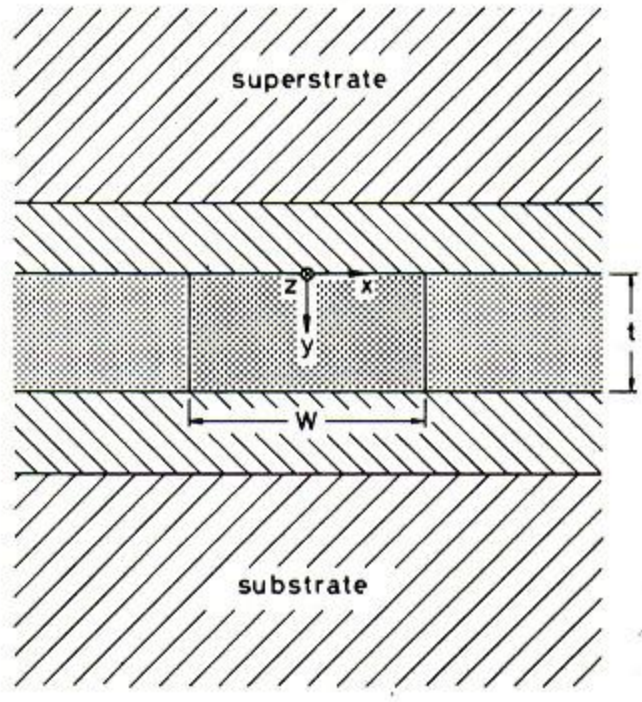

Fig. 1. Three-dimensional optical waveguide geometry.

In this paper, this approximate scalar finite-element method is extended to the anisotropic waveguides having a permittivity tensor with nonzero off-diagonal elements. For two-dimensional waveguides ($\partial/\partial x = 0$) [14]–[17], the matrix equation derived by this approach is reduced to the exact expression for two-dimensional guided modes [18], [19]. In order to study the accuracy of the method, various isotropic dielectric waveguides are analyzed and the results obtained are compared with previously published results [5], [10], [20]. Then, numerical examples on an anisotropic dielectric rectangular waveguide composed of a uniaxial medium are given. Our results for the waveguide whose optic axis lies in the xy-plane agree well with the results of the vectorial wave analysis using the variational method [11]. We also demonstrate the application of this approach by analyzing the anisotropic dielectric rectangular waveguide whose optic axis lies in the xz- or yz-plane.

Manuscript received June 15, 1983; revised January 3, 1984.
The authors are with the Department of Electronic Engineering, Hokkaido University, Sapporo, 060, Japan.

0018-9480/84/0600-0587$01.00 ©1984 IEEE

II. Approximate Basic Equations

We consider a three-dimensional anisotropic waveguide in Fig. 1 having a permittivity tensor with all nonzero off-diagonal elements $\epsilon_0 K_{ij}$ $(i, j = x, y, z)$ and the permeability of free space μ_0, where ϵ_0 is the permittivity of free space and K_{ij} is the relative permittivity.

Maxwell's equations are, in component form

$$\partial E_z/\partial y + jk_z E_y = -j\omega\mu_0 H_x \tag{1}$$

$$-jk_z E_x - \partial E_z/\partial x = -j\omega\mu_0 H_y \tag{2}$$

$$\partial E_y/\partial x - \partial E_x/\partial y = -j\omega\mu_0 H_z \tag{3}$$

$$\partial H_z/\partial y + jk_z H_y = j\omega D_x \tag{4}$$

$$-jk_z H_x - \partial H_z/\partial x = j\omega D_y \tag{5}$$

$$\partial H_y/\partial x - \partial H_x/\partial y = j\omega D_z \tag{6}$$

$$H_z = (1/jk_z)(\partial H_x/\partial x + \partial H_y/\partial y) \tag{7}$$

$$D_z = (1/jk_z)(\partial D_x/\partial x + \partial D_y/\partial y) \tag{8}$$

where E_i, H_i, and D_i are the electric field, the magnetic field, and the electric flux density, respectively, and ω and k_z are the angular frequency and the wavenumber in the z-direction, respectively.

The constitutive relations are

$$D_x = \epsilon_0(K_{xx}E_x + K_{xy}E_y + K_{xz}E_z) \tag{9}$$

$$D_y = \epsilon_0(K_{xy}E_x + K_{yy}E_y + K_{yz}E_z) \tag{10}$$

$$D_z = \epsilon_0(K_{xz}E_x + K_{yz}E_y + K_{zz}E_z). \tag{11}$$

We assume $|K_{ij}| \ll K_{ii}$ $(i \neq j)$ and a small index variation in the lateral (x) direction, then we may approximate as

$$K_{ij}\partial/\partial x \doteq 0, \qquad i \neq j. \tag{12}$$

Considering (12), from (2) and (11) we obtain

$$H_y = \frac{1}{j\omega\mu_0}\left(jk_z E_x + \frac{1}{\epsilon_0 K_{zz}}\frac{\partial D_z}{\partial x}\right). \tag{13}$$

Substituting (8) into (13) and considering (9), (10), and (12), we obtain

$$H_y = \frac{1}{j\omega\mu_0}\left[jk_z E_x + \frac{1}{jk_z K_{zz}}\frac{\partial}{\partial x}\left(K_{xx}\frac{\partial E_x}{\partial x} + K_{yy}\frac{\partial E_y}{\partial y}\right)\right]. \tag{14}$$

We write (3)

$$H_z = \frac{1}{j\omega\mu_0}\left(\frac{\partial E_x}{\partial y} - \frac{\partial E_y}{\partial x}\right). \tag{15}$$

Considering (10)–(12) and eliminating E_z between (5) and (6), we obtain

$$E_y = -\frac{1}{j\omega\epsilon_0}\frac{1}{a}\left(jk_z K_{zz}H_x + K_{zz}\frac{\partial H_z}{\partial x} - K_{yz}\frac{\partial H_x}{\partial y}\right) - \frac{b}{a}E_x. \tag{16}$$

Substituting (7) into (16), we obtain

$$E_y = -\frac{1}{j\omega\epsilon_0}\frac{1}{a}\left[jk_z K_{zz}H_x + \frac{K_{zz}}{jk_z}\frac{\partial}{\partial x}\left(\frac{\partial H_x}{\partial x} + \frac{\partial H_y}{\partial y}\right) - K_{yz}\frac{\partial H_x}{\partial y}\right] - \frac{b}{a}E_x. \tag{17}$$

Considering (10)–(12) and eliminating E_y between (5) and (6), we obtain

$$E_z = -\frac{1}{j\omega\epsilon_0}\frac{1}{a}\left(K_{yy}\frac{\partial H_x}{\partial y} - K_{yy}\frac{\partial H_y}{\partial x} - jk_z K_{yz}H_x\right) - \frac{c}{a}E_x \tag{18}$$

where

$$a = K_{yy}K_{zz} - K_{yz}^2 \tag{19a}$$

$$b = K_{xy}K_{zz} - K_{xz}K_{yz} \tag{19b}$$

$$c = K_{xz}K_{yy} - K_{xy}K_{yz}. \tag{19c}$$

Substituting (14), (15), (17), and (18) into (4), considering (12) and neglecting the terms of E_y in the same manner as in the isotropic case [7], [12], we obtain

$$\frac{K_{xx}}{K_{zz}}\frac{\partial}{\partial x}\left(\frac{\partial\phi}{\partial x}\right) + \frac{\partial}{\partial y}\left(\frac{\partial\phi}{\partial y}\right) + \left[k_0^2\left(K_{xx} - K_{xy}\frac{b}{a} - K_{xz}\frac{c}{a}\right) - k_z^2\right]\phi - k_0 k_z\frac{b}{a}\psi + jk_0\frac{c}{a}\frac{\partial\psi}{\partial y} = 0. \tag{20}$$

Similarly, substituting (17) and (18) into (1) and neglecting the terms of H_y in the same manner as in the isotropic case [7], [12], we obtain

$$\frac{K_{zz}}{a}\frac{\partial}{\partial x}\left(\frac{\partial\psi}{\partial x}\right) + \frac{\partial}{\partial y}\left(\frac{K_{yy}}{a}\frac{\partial\psi}{\partial y} - jk_z\frac{K_{yz}}{a}\psi + jk_0\frac{c}{a}\phi\right) + \left(k_0^2 - k_z^2\frac{K_{zz}}{a}\right)\psi - jk_z\frac{K_{yz}}{a}\frac{\partial\psi}{\partial y} - k_0 k_z\frac{b}{a}\phi = 0 \tag{21}$$

where

$$\phi = E_x \tag{22}$$

$$\psi = \eta_0 H_x \tag{23}$$

$$k_0 = \omega\sqrt{\epsilon_0\mu_0} \tag{24}$$

$$\eta_0 = \sqrt{\mu_0/\epsilon_0}. \tag{25}$$

If the waveguide is isotropic, namely $K_{xx} = K_{yy} = K_{zz} \equiv n^2$ and $K_{xy} = K_{xz} = K_{yz} = 0$, (20) is reduced to the Helmholtz equation for the TE_y mode $(E_y \equiv 0)$ and (21) is reduced to that for the TM_y mode $(H_y \equiv 0)$ derived by Yasuura, Shimohara, and Miyamoto [20], where n is the refractive index. In the case of an infinite slab waveguide $(\partial/\partial x = 0$, two-dimensional waveguide) [14]–[17], the approximate basic equations (20) and (21) are reduced to the exact equations for the two-dimensional guided modes.

III. Finite-Element Approach

The finite-element formulation is based on the following variational expression [2], [3], [5]–[8], [18] for previous

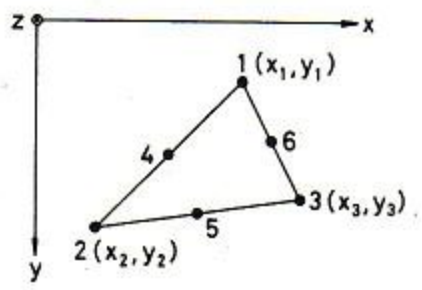

Fig. 2. 2nd-order triangular element.

equations (20) and (21):

$$\delta I = 0 \tag{26}$$

where

$$\begin{aligned} I = \iint_{\Omega} \Bigg(& \frac{K_{xx}}{K_{zz}} \frac{\partial \phi^*}{\partial x} \frac{\partial \phi}{\partial x} + \frac{\partial \phi^*}{\partial y} \frac{\partial \phi}{\partial y} \\ & + \left[k_z^2 - k_0^2 \left(K_{xx} - K_{xy} \frac{b}{a} - K_{xz} \frac{c}{a} \right) \right] \phi^* \phi \\ & + \frac{K_{zz}}{a} \frac{\partial \psi^*}{\partial x} \frac{\partial \psi}{\partial x} + \frac{K_{yy}}{a} \frac{\partial \psi^*}{\partial y} \frac{\partial \psi}{\partial y} + \left(k_z^2 \frac{K_{zz}}{a} - k_0^2 \right) \psi^* \psi \\ & + j k_z \frac{K_{yz}}{a} \left(\psi^* \frac{\partial \psi}{\partial y} - \frac{\partial \psi^*}{\partial y} \psi \right) \\ & + k_0 k_z \frac{b}{a} (\phi^* \psi + \psi^* \phi) \\ & - j k_0 \frac{c}{a} \left(\phi^* \frac{\partial \psi}{\partial y} - \frac{\partial \psi^*}{\partial y} \phi \right) \Bigg) \, dx \, dy. \end{aligned} \tag{27}$$

Here, Ω is the cross section of the guide and the asterisk denotes complex conjugate.

Dividing the cross section of the guide into a number of 2nd-order triangular elements as shown in Fig. 2, ϕ in (22) and ψ in (23) within each element are defined in terms of ϕ_k and ψ_k at the nodal points k ($k = 1, 2, \cdots, 6$), respectively, as follows:

$$\phi = \{N\}^T \{\phi\}_e \tag{28}$$

$$\psi = \{N\}^T \{\psi\}_e \tag{29}$$

where

$$\{\phi\}_e = [\phi_1 \phi_2 \phi_3 \phi_4 \phi_5 \phi_6]^T \tag{30}$$

$$\{\psi\}_e = [\psi_1 \psi_2 \psi_3 \psi_4 \psi_5 \psi_6]^T \tag{31}$$

$$\{N\} = [N_1 N_2 N_3 N_4 N_5 N_6]^T. \tag{32}$$

Here T, $\{\cdot\}$, and $\{\cdot\}^T$ denote a transpose, a column vector, and a row vector, respectively, and the shape functions N_1 to N_6 are given by

$$N_1 = L_1(2L_1 - 1) \tag{33a}$$

$$N_2 = L_2(2L_2 - 1) \tag{33b}$$

$$N_3 = L_3(2L_3 - 1) \tag{33c}$$

$$N_4 = 4L_1 L_2 \tag{33d}$$

$$N_5 = 4L_2 L_3 \tag{33e}$$

$$N_6 = 4L_3 L_1 \tag{33f}$$

with the area coordinates L_1, L_2, and L_3 [2], [5]. The relation equation between the area coordinates and Cartesian coordinates is given by

$$\begin{bmatrix} x \\ y \\ 1 \end{bmatrix} = \begin{bmatrix} x_1 & x_2 & x_3 \\ y_1 & y_2 & y_3 \\ 1 & 1 & 1 \end{bmatrix} \begin{bmatrix} L_1 \\ L_2 \\ L_3 \end{bmatrix} \tag{34}$$

where (x_l, y_l) are the Cartesian coordinates of the vertex l ($l = 1, 2, 3$) of the triangle.

Both ϕ and ψ fields exist in the medium (or media) surrounding the optical waveguide, and these fields extend to infinity. One method for modeling the surround is imposing an artificial zero boundary condition for ϕ and ψ at a large enough distance from the guide. This method has as an advantage its simplicity and is widely used [2]–[8], [12], [13]. Using this zero boundary condition and substituting (28) and (29) into (27), from (26) we obtain the following global matrix equation:

$$\begin{bmatrix} [A] & [B] \\ [C] & [D] \end{bmatrix} \begin{bmatrix} \{\phi\} \\ \{\psi\} \end{bmatrix} = \{0\} \tag{35}$$

where

$$\begin{aligned} [A] = \sum_e \iint_{\Omega_e} \Bigg(& \frac{K_{xx,e}}{K_{zz,e}} \frac{\partial \{N\}}{\partial x} \frac{\partial \{N\}^T}{\partial x} + \frac{\partial \{N\}}{\partial y} \frac{\partial \{N\}^T}{\partial y} \\ & - \left[k_0^2 \left(K_{xx,e} - K_{xy,e} \frac{b_e}{a_e} - K_{xz,e} \frac{c_e}{a_e} \right) - k_z^2 \right] \\ & \cdot \{N\}\{N\}^T \Bigg) \, dx \, dy \end{aligned} \tag{36a}$$

$$\begin{aligned} [B] = \sum_e \iint_{\Omega_e} \Bigg(& k_0 k_z \frac{b_e}{a_e} \{N\}\{N\}^T \\ & - j k_0 \frac{c_e}{a_e} \{N\} \frac{\partial \{N\}^T}{\partial y} \Bigg) \, dx \, dy \end{aligned} \tag{36b}$$

$$\begin{aligned} [C] = \sum_e \iint_{\Omega_e} \Bigg(& k_0 k_z \frac{b_e}{a_e} \{N\}\{N\}^T \\ & + j k_0 \frac{c_e}{a_e} \frac{\partial \{N\}}{\partial y} \{N\}^T \Bigg) \, dx \, dy \end{aligned} \tag{36c}$$

$$\begin{aligned} [D] = \sum_e \iint_{\Omega_e} \Bigg(& \frac{K_{zz,e}}{a_e} \frac{\partial \{N\}}{\partial x} \frac{\partial \{N\}^T}{\partial x} \\ & + \frac{K_{yy,e}}{a_e} \frac{\partial \{N\}}{\partial y} \frac{\partial \{N\}^T}{\partial y} \\ & + j k_z \frac{K_{yz,e}}{a_e} \left[\{N\} \frac{\partial \{N\}^T}{\partial y} - \frac{\partial \{N\}}{\partial y} \{N\}^T \right] \\ & - \left[k_0^2 - k_z^2 \frac{K_{zz,e}}{a_e} \right] \{N\}\{N\}^T \Bigg) \, dx \, dy. \end{aligned} \tag{36d}$$

Here the summation Σ_e extends over all different elements, the components of $\{\phi\}$ and $\{\psi\}$ vectors are the values of E_x and $\eta_0 H_x$ at nodal points in Ω, respectively, and $\{0\}$ is a null vector.

For an anisotropic waveguide with a diagonal permittivity tensor, namely $K_{xy} = K_{xz} = K_{yz} = 0$, (35) is reduced to the equations derived by Koshiba, Hayata, and Suzuki [12]. In this case, $[B] = [C] = [0]$ (where $[0]$ is a zero matrix) and

equations $\|[A]\| = 0$ and $\|[B]\| = 0$ determine the dispersion characteristics for the E_{pq}^x and E_{pq}^y modes [10] in the waveguides with a diagonal permittivity tensor, respectively. The main field components of the E_{pq}^x modes are E_x and H_y, while those of the E_{pq}^y modes are H_x and E_y [10]. The subscripts p and q are used to designate the number of maxima of the dominant field in the x- and y-directions, respectively. In the case of a two-dimensional waveguide ($\partial/\partial x = 0$), (35) gives the exact expression for two-dimensional guided modes [18], [19].

In order that a nontrivial solution of (35) may exist

$$\begin{vmatrix} [A] & [B] \\ [C] & [D] \end{vmatrix} = 0 \tag{37}$$

must hold. This equation is the eigenvalue (dispersion) equation which determines the dispersion characteristics for the guided modes in anisotropic waveguides having a permittivity tensor with nonzero off-diagonal elements. In the present analysis, the Cholesky method, the Householder's method, the method of bisections, and the QR method are suitably used for solving (37).

IV. Computed Results

Equation (12) and neglect of E_y and H_y in (20) and (21) may not be valid for the neighborhood of cutoff frequency and for the higher order modes. Therefore, it is necessary to study the accuracy of the method.

First we consider isotropic dielectric waveguides which are analyzed by many researchers using a variety of methods [1]–[13], [20]. Fig. 3 shows the dispersion characteristics for the fundamental E_{11}^y mode in an embossed waveguide and in a channel waveguide, where the index variation in the lateral direction of the channel waveguide is smaller than that of the embossed waveguide and the finite-element model uses 84 elements and 195 nodal points in one-half of the cross section. For the embossed waveguide, our results (solid lines) deviate from the results (dots) of the vectorial finite-element method [5] in the neighborhood of cutoff frequency when the width W/t is narrow ($W/t = 1$ and 2). On the other hand, for the channel waveguide with $W/t = 2$, agreement between our results (dashed line) and the results (circles) of the vectorial finite-element method is good over a wide range of frequencies. In [12], the approximate scalar finite-element method is used for the analysis of an anisotropic channel waveguide with a diagonal permittivity tensor and a 1-percent variation of the ordinary and extraordinary refractive indices of $LiNbO_3$, and the results obtained agree very well with the results of the vectorial finite-element method [3].

Fig. 4(a) shows the dispersion characteristics for the E_{pq}^x and E_{pq}^y modes in a rib waveguide, where the finite-element model employs 180 elements and 399 nodal points in one-half of the cross section. The E_{11}^x (or E_{11}^y) and E_{21}^x (or E_{21}^y) modes are the lowest modes of the symmetric (p is odd) and antisymmetric (p is even) E_{pq}^x (or E_{pq}^y) modes, respectively. Our results for these modes agree well with the results of the mode-matching method [20]. However, our results for the higher order E_{31}^x and E_{31}^y modes are not in good agreement with the results of the mode-matching method, especially near the cutoff frequencies. Fig. 4(b) shows the dispersion characteristics for the fundamental E_{11}^x mode in the rib waveguide when the width W/t is altered. When the width W/t becomes narrow, our results deviate from the results (dots) of the mode-matching method. But our results are closer to the results of the mode-matching method than those (circles) of Marcatili's approximate analytical approach [10]. From Figs. 3 and 4, we may conclude that the approximate scalar finite-element results are more accurate for the lower order modes in the waveguide of a small index variation in the lateral

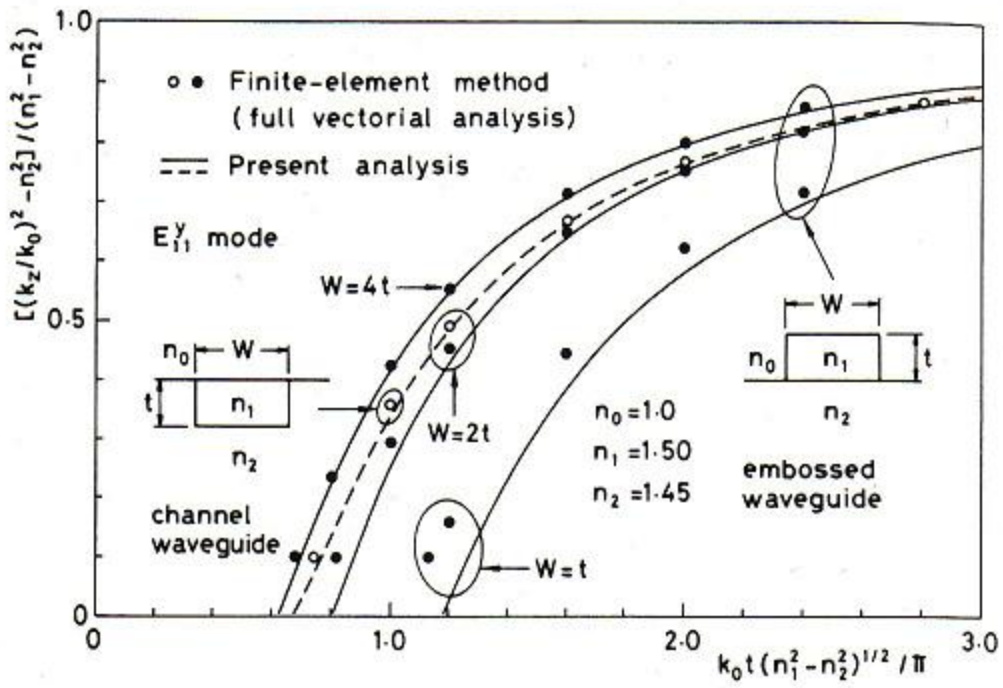

Fig. 3. Dispersion characteristics for the embossed waveguide and the channel waveguide.

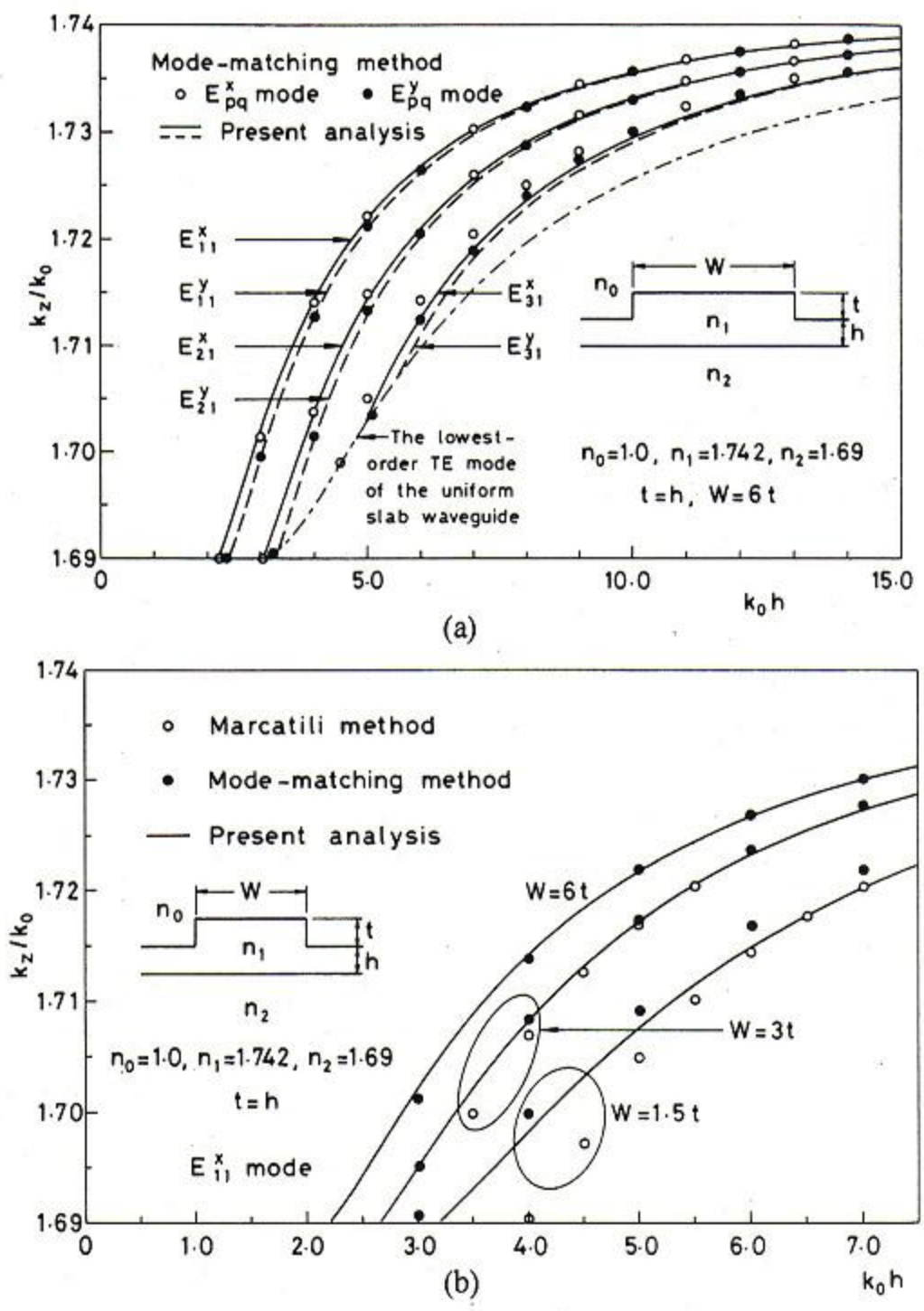

Fig. 4. Dispersion characteristics for the rib waveguide. (a) E_{pq}^x, E_{pq}^y modes. (b) E_{11}^x mode.

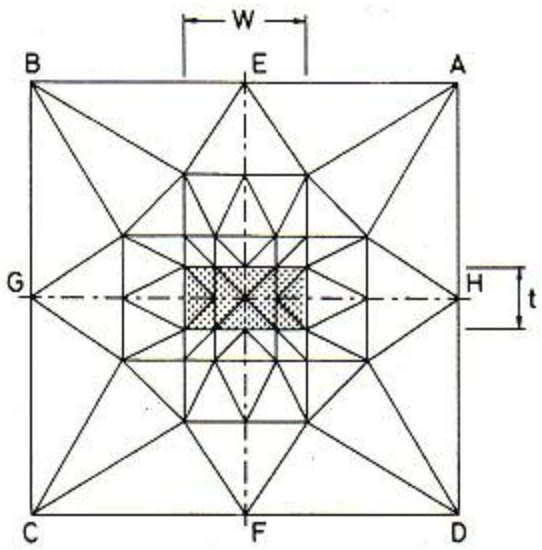

Fig. 5. Element division for the anisotropic dielectric rectangular wave - guide.

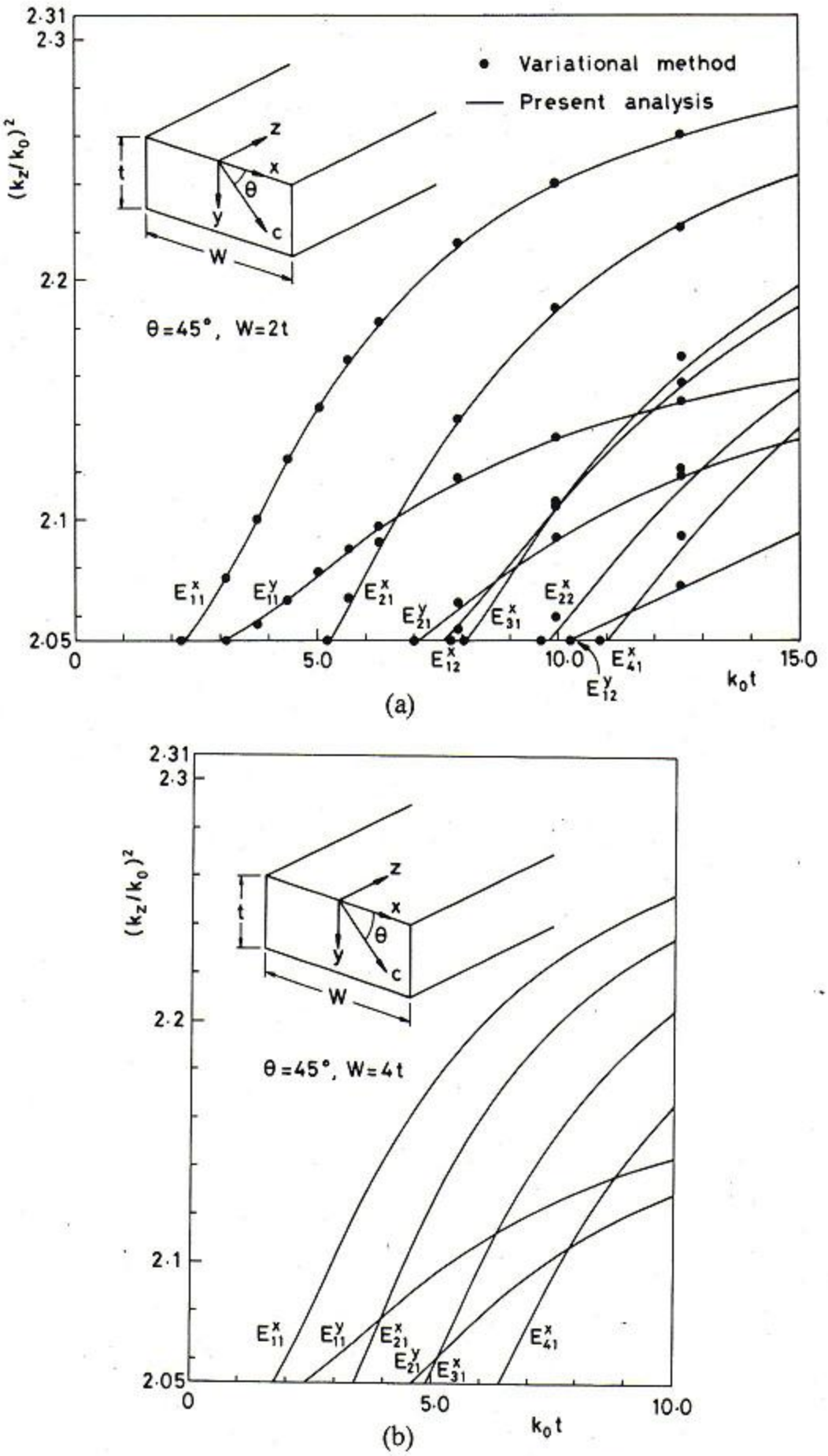

Fig. 6. Dispersion characteristics for the anisotropic dielectric rectangular waveguide whose optic axis lies in the *xy*-plane. (a) $W = 2t$. (b) $W = 4t$.

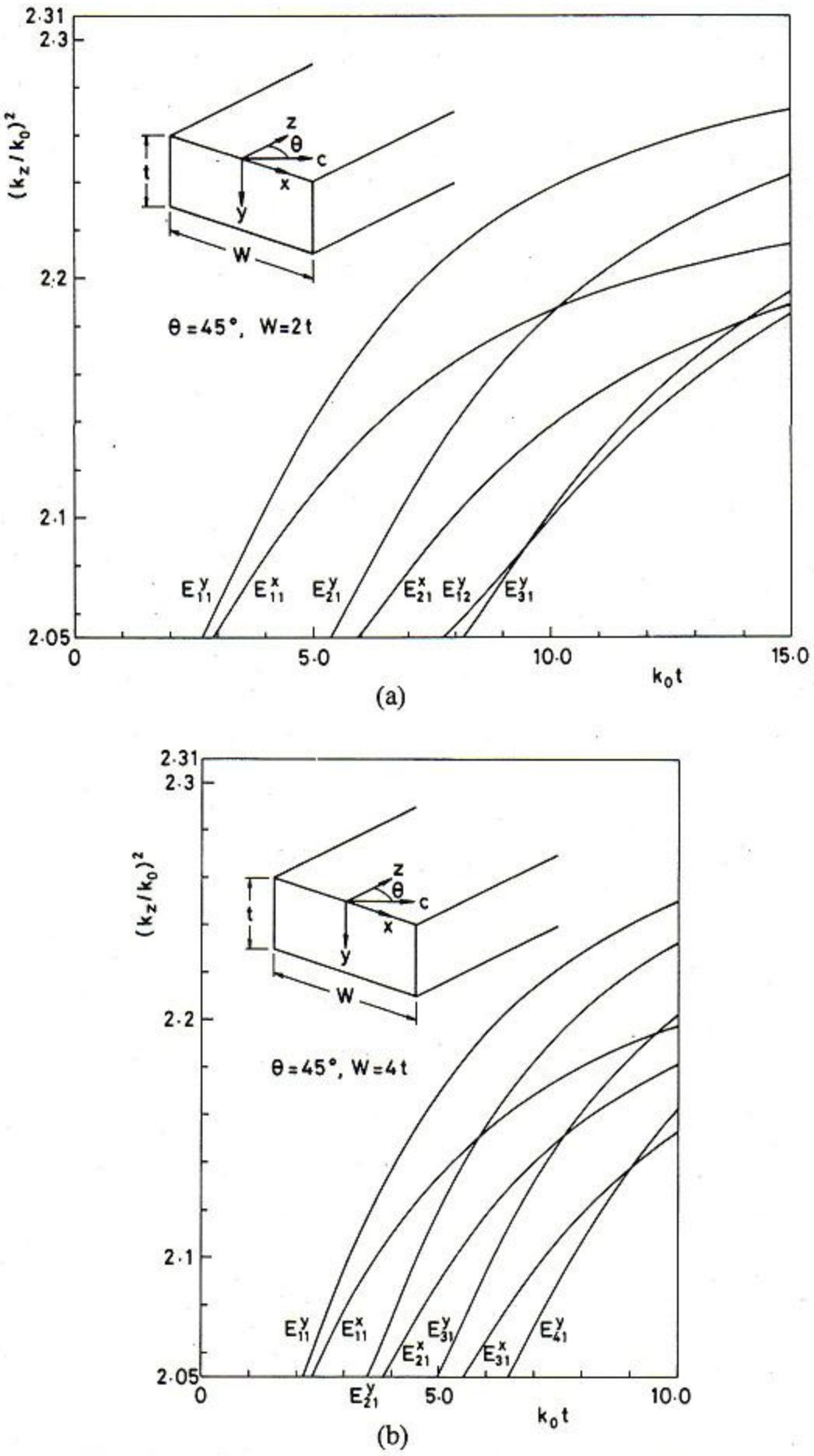

Fig. 7. Dispersion characteristics for the anisotropic dielectric rectangular waveguide whose optic axis lies in the *xz*-plane. (a) $W = 2t$. (b) $W = 4t$.

(x) direction or for those in the waveguide of a large width-to-height ratio. However, for the waveguide of a small width-to-height ratio and near the cutoff frequencies, the accuracy of the method is questionable. It seems that variations in accuracy are due to the scalar approximations.

As for the second example, we consider an anisotropic dielectric rectangular waveguide composed of a uniaxial medium. A typical division of this waveguide into 2nd-order triangular elements is shown in Fig. 5, where the number of elements and of nodal points is 80 and 169, respectively. Figs. 6–8 show the dispersion characteristics for the guided modes in the anisotropic dielectric rectangular waveguides surrounded by an isotropic medium of refractive index $\sqrt{2.05}$, where the ordinary and extraordinary refractive indices of a rectangular core are $\sqrt{2.31}$ and $\sqrt{2.19}$, respectively. The optic axis c in Figs. 6, 7, and 8 lies in the *xy*-plane at an angle $\theta = 45°$ from the *x*-axis ($K_{xy} \neq 0$, $K_{xz} = K_{yz} = 0$), in the *xz*-plane at an angle $\theta = 45°$ from the *z*-axis ($K_{xz} \neq 0$, $K_{xy} = K_{yz} = 0$), and in the *yz*-plane at an angle $\theta = 45°$ from the *z*-axis ($K_{yz} \neq 0$, $K_{xy} = K_{xz} = 0$), respectively. Modes are designated as E^x_{pq} (E^x_{pq}-like mode)

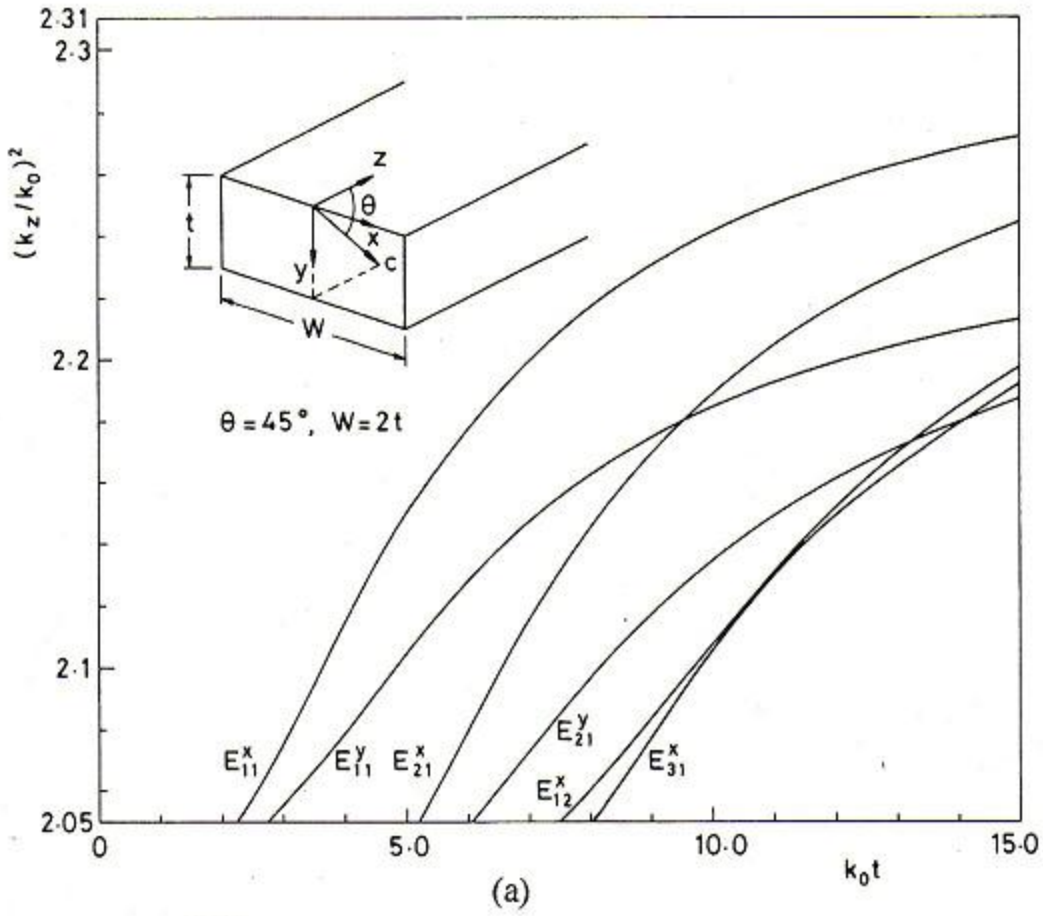

(a)

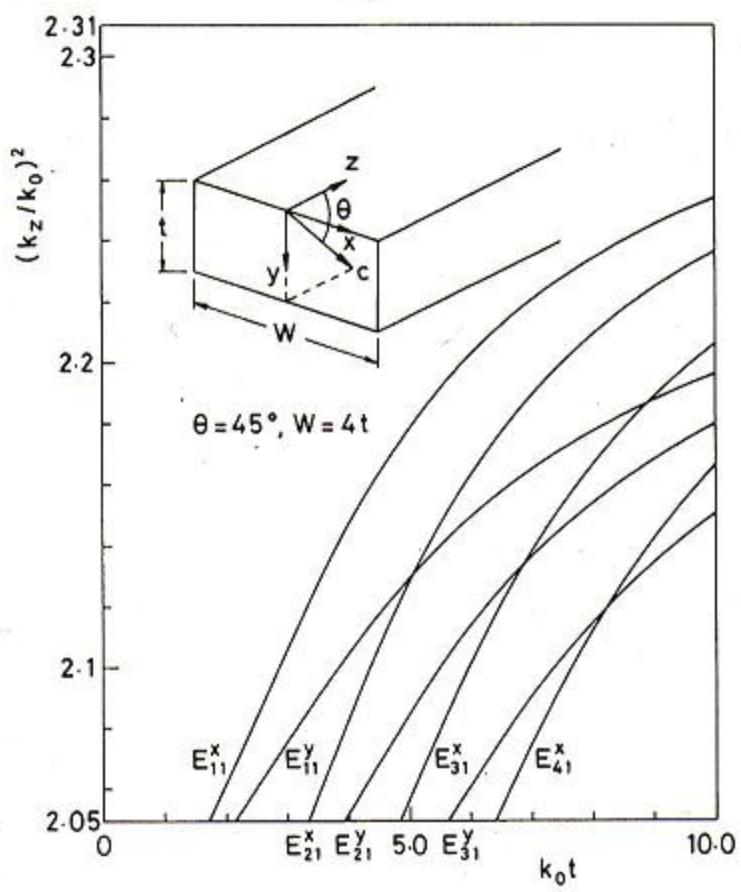

(b)

Fig. 8. Dispersion characteristics for the anisotropic dielectric rectangular waveguide whose optic axis lies in the yz-plane. (a) $W = 2t$. (b) $W = 4t$.

if at a frequency near cutoff the electric field E_x is dominant and as E^y_{pq} (E^y_{pq}-like mode) if at a frequency near cutoff the magnetic field H_x is dominant. As we can see from (35) and (36), in general, there is coupling between the field components E_x and H_x via the off-diagonal element K_{ij}. In the case of $K_{yz} \neq 0$ and $K_{xy} = K_{xz} = 0$ in Fig. 8, the matrices $[B]$ and $[C]$ in (35) vanish, and the E^x_{pq}-modes group and the E^y_{pq}-modes group are separable in the present approach. For the waveguide in Fig. 6, the region $ABCD$ in Fig. 5 should be divided into elements because of the lack of symmetry of the field. The waveguide in Fig. 7 or 8 has a plane of symmetry, $y = t/2$ or $x = 0$, respectively. Therefore, for the waveguide in Fig. 7 or 8 the region $ABGH$ or $AEFD$ in Fig. 5 is divided into elements, respectively.

Ohtaka [11] has analyzed the anisotropic dielectric rectangular waveguide with $W = 2t$ whose optic axis lies in the xy-plane using the variational method. Comparison of our results for the waveguide in Fig. 6(a) with the results of the vectorial wave analysis using the variational method shows good agreement. This fact demonstrates the reliability of the present method. With reference to Figs. 6–8, effects of the direction of the optic axis and the guide-width on the dispersion characteristics of the guided modes can be observed. In the waveguide whose optic axis lies in the xy- or yz-plane, the fundamental mode is the E^x_{11} mode and in the waveguide whose optic axis lies in the xz-plane the fundamental mode is E^y_{11} mode. When the guide-width is made narrower, the cutoff frequency of each mode becomes higher and the frequency range of single-mode operation in each class of modes (the E^x_{pq}-like modes and the E^y_{pq}-like modes) becomes wider.

The nonphysical spurious solutions do not appear in Figs. 3, 4, and 6–8 because of the positive definite nature of (27).

V. Conclusions

An approximate scalar finite-element method was developed for the analysis of three-dimensional anisotropic optical waveguides having a permittivity tensor with nonzero off-diagonal elements. In this approach, the nonphysical spurious solutions which are included in the solutions of the vectorial finite-element method in an axial components formulation do not appear.

The present approach may be applicable to the analysis of three-dimensional anisotropic diffused optical waveguides.

In the present approach, the artificial zero boundary condition is used at a large enough distance from the guide (bounded structure), so the entire mode spectrum is a discrete set of modes. The problem of how to deal with an open guided-wave structure (unbounded structure), including the continuous spectrum hereafter still remains.

References

[1] M. J. Adams, *An Introduction to Optical Waveguide*. New York: Wiley-Interscience, 1981.

[2] C. Yeh, S. B. Dong, and W. Oliver, "Arbitrarily shaped inhomogeneous optical fiber or integrated optical waveguides," *J. Appl. Phys.*, vol. 46, pp. 2125–2129, May 1975.

[3] P. Vandenbulcke and P. E. Lagasse, "Eigenmode analysis of anisotropic optical fiber or integrated optical waveguides," *Electron. Lett.*, vol. 12, pp. 120–122, Mar. 1976.

[4] T. S. Bird, "Propagation and radiation characteristics of rib waveguide," *Electron. Lett.*, vol. 13, pp. 401–403, July 1977.

[5] C. Yeh, K. Ha, S. B. Dong, and W. P. Brown, "Single-mode optical waveguides," *Appl. Opt.*, vol. 18, pp. 1490–1504, May 1979.

[6] M. Ikeuchi, H. Sawami, and H. Niki, "Analysis of open-type dielectric waveguides by the finite-element iterative method," *IEEE Trans. Microwave Theory Tech.*, vol. MTT-29, pp. 234–239, Mar. 1981.

[7] N. Mabaya, P. E. Lagasse, and P. Vandenbulcke, "Finite element analysis of optical waveguides," *IEEE Trans. Microwave Theory Tech.*, vol. MTT-29, pp. 600–605, June 1981.

[8] K. Oyamada and T. Okoshi, "Two-dimensional finite-element method calculation of propagation characteristics of axially nonsymmetrical optical fibers," *Radio Sci.*, vol. 17, pp. 109–116, Jan.–Feb. 1982.

[9] R. A. Steinberg and T. G. Giallorenzi, "Modal fields of anisotropic channel waveguides," *J. Opt. Soc. Am.*, vol. 67, pp. 523–533, Apr. 1977.

[10] E. A. Marcatili, "Dielectric rectangular waveguide and directional coupler for integrated optics," *Bell. Syst. Tech. J.*, vol. 48, pp. 2071–2102, Sept. 1969.

[11] M. Ohtaka, "Analysis of the guided modes in the anisotropic dielectric optical waveguides," *Trans. Inst. Electron. Commun. Eng. Japan*, vol. J64-C, pp. 674–681, Oct. 1981.

[12] M. Koshiba, K. Hayata, and M. Suzuki, "Approximate scalar finite-element analysis of anisotropic optical waveguides," *Electron. Lett.*, vol. 18, pp. 411–413, May 1982.

[13] M. Koshiba, K. Hayata, and M. Suzuki, "On accuracy of approximate scalar finite-element analysis of dielectric optical waveguides," *Trans. Inst. Electron. Commun. Eng. Japan*, vol. E66, pp. 157–158, Feb. 1983.

[14] S. Yamamoto, Y. Koyamada, and T. Makimoto, "Normal-mode analysis of anisotropic and gyrotropic thin-film optical waveguides and their applications," *Trans. Inst. Electron. Commun. Eng. Japan*, vol. 55-C, pp. 550–557, Oct. 1972.

[15] Y. Satomura, M. Matsuhara, and N. Kumagai, "Analysis of electromagnetic-wave modes in anisotropic slab waveguides," *IEEE Trans. Microwave Theory Tech.*, vol. MTT-22, pp. 86–92, Feb. 1974.

[16] D. Marcuse, "Modes of a symmetric slab waveguides in birefringent media—Part I: Optical axis not in plane of slab," *IEEE J. Quantum Electron.*, vol. QE-14, pp. 736–741, Oct. 1978.

[17] D. Marcuse and I. P. Kaminow, "Modes of a symmetric slab optical waveguides in birefringent media, Part II: Slab with coplanar optical axis," *IEEE J. Quantum Electron.*, vol. QE-15, pp. 92–101, Feb. 1979.

[18] M. Hano and K. Kayano, "An analysis of anisotropic and inhomogeneous optical waveguide using finite element method," *Trans. Inst. Electr. Eng. Japan*, vol. 101(C), pp. 213–219, Sept. 1981.

[19] M. Koshiba and M. Suzuki, "Numerical analysis of planar arbitrarily anisotropic diffused optical waveguides using finite-element method," *Electron. Lett.*, vol. 18, pp. 579–581, June 1982.

[20] K. Yasuura, K. Shimohara, and T. Miyamoto, "Numerical analysis of a thin-film waveguide by mode-matching method," *J. Opt. Soc. Am.*, vol. 70, pp. 183–191, Feb. 1980.

Masanori Koshiba (SM'84) was born in Sapporo, Japan, on November 23, 1948, He received the B.S., M.S., and Ph.D. degrees in electronic engineering from Hokkaido University, Sapporo, Japan, in 1971, 1973, and 1976, respectively.

In 1976, he joined the Department of Electronic Engineering, Kitami Institute of Technology, Kitami, Japan. Since 1979, he has been an Assistant Professor of Electronic Engineering at Hokkaido University. He has been engaged in research on surface acoustics waves, dielectric optical waveguides, and applications of finite-element and boundary element methods to fields problems.

Dr. Koshiba is a member of the Institute of Electronics and Communication Engineers of Japan.

Kazuya Hayata was born in Kushiro, Japan, on December 1, 1959. He received the B.S. degree in electronic engineering from Hokkaido University, Sapporo, Japan, in 1982.

He is presently studying toward the M.S. degree in electronic engineering, Hokkaido University, Sapporo, Japan.

Mr. Hayata is a member of the Institute of Electronics and Communication Engineers of Japan.

Michio Suzuki (SM'57) was born in Sapporo, Japan, on November 14, 1923. He received the B.S. and Ph.D. degrees in electrical engineering from Hokkaido University, Sapporo, Japan, in 1946 and 1960, respectively.

From 1948 to 1962, he was an Assistant Professor of Electrical Engineering at Hokkaido University. Since 1962, he has been a Professor of Electronic Engineering at Hokkaido University. From 1956 to 1957, he was a Research Associate at the Microwave Research Institute of the Polytechnic Institute of Brooklyn, Brooklyn, NY.

Dr. Suzuki is a member of the Institute of Electronics and Communication Engineers of Japan, the Institute of Electrical Engineers of Japan, and the Institute of Television Engineers of Japan.