ARMA Digital Lattice Filter Based on New Criterion

YOSHIKAZU MIYANAGA, MEMBER, IEEE, NOBUO NAGAI, MEMBER, IEEE, AND NOBUHIRO MIKI, MEMBER, IEEE

Abstract —**In this paper, a new ARMA digital lattice filter is proposed. First, a new criterion is defined for designing the ARMA digital lattice filter from given stochastic data. Based on this criterion, an ARMA parameter estimation algorithm is developed. This algorithm can estimate the ARMA parameters with little calculation cost. Then, from the fast algorithm of the ARMA parameter estimation, two elementary sections of the ARMA digital lattice filter are invented. Any ARMA model with an arbitrary AR order and an arbitrary MA order can be realized by using these elementary sections. In this paper, the proposed ARMA lattice filter is compared with other fast algorithms of ARMA parameter estimation and other ARMA lattice filters. Experimental results obtained from applying this filter to model reduction problems are shown. From these results, it is shown that this ARMA lattice filter is quite useful for ARMA digital signal processing.**

I. Introduction

VARIOUS AUTOREGRESSIVE and moving-average (ARMA) digital filters have been introduced. It is shown in some papers [1]–[6] that an ARMA digital filter is quite useful for signal processing. The ARMA digital filter can represent both the concentration and the dispersion of power in the spectral domain, while an AR digital filter can represent only its concentration. By using this characteristic, we can analyze certain kinds of stochastic time series very accurately. For example, ARMA digital filters are recognized as superb filters in speech analysis [3], [4].

As one of these ARMA digital filters, an ARMA lattice filter has been designed. The construction of this filter is basically a cascaded-type digital filter. Owing to the cascaded type, this filter is precise for spectrum matching and analyzing a stochastic time series by adding a new section at the final stage without changing the filter form already obtained. The original characteristics of the ARMA lattice filter have been introduced [4]–[6]. In addition, various filter forms have been developed as ARMA lattice filters. These lattice filters are mainly derived from an AR lattice filter. Thus, these includes the characteristics of the AR lattice filter implicitly even if these characteristics are not desired.

This paper proposes a new ARMA lattice filter. This filter is based on a new criterion. The criterion is newly introduced to identify an ARMA model. Thus, the ARMA digital lattice filter derived from this criterion is not based on the design method of the conventional AR lattice filter. In other words, there are some original characteristics. We can easily design the ARMA digital lattice filter with an arbitrary AR order and an arbitrary MA order. In addition, every estimation error obtained in each cascaded section satisfies orthogonal conditions.

The new ARMA digital lattice filter is directly designed by an ARMA parameter estimation algorithm. This algorithm can estimate ARMA parameters with little calculation cost. The estimation parameters optimally makes the proposed criterion minimal. The proposed algorithm consists of two recursive formulas. One is an AR-type recursive formula. It can estimate ARMA parameters as the AR order of an ARMA estimation model increases by one. The other is an MA-type recursive formula. It can estimate ARMA parameters as the MA order of an ARMA estimation model increases by one. From these recursive formulas, we can develop two types of elementary sections used in an ARMA digital lattice filter (i.e., an AR-type elementary section and an MA-type elementary section associated with, respectively, the AR-type recursive formula and the MA-type recursive formula). The particularity of this filter is the design of an ARMA model with an arbitrary AR order and an arbitrary MA order. In other words, there is no restriction for each order, and no dependency of an AR model on an MA model or vice versa.

Section II introduces a criterion. Then, in Section III, four estimation errors are defined to derive a fast recursive method. Section IV develops the fast recursive method and Section V shows the elementary sections of an ARMA lattice filter associated with the fast recursive method. The proposed ARMA lattice filter has several unique characteristics because of the criterion and the fast recursive method. The differences between it and existing methods are shown in Section VI.

The final part of this paper shows some experimental results. It shows that the proposed ARMA lattice filter is quite suitable for a model reduction algorithm and that several ARMA lattice filters can be obtained from the observed data owing to the new criterion.

II. Criterion

In this section, the criterion for an ARMA parameter estimation is defined. The criterion is based on linear prediction theory. All of ARMA parameters are calculated by minimizing the proposed criterion. In order to define

Manuscript received November 25, 1985; revised August 20, 1986, and January 13, 1987. This work was supported in part by the Ministry of Education, Science and Culture of Japan under a Grant-in-Aid for Developmental Scientific Research (60550241).

The authors are with the Research Institute of Applied Electricity, Hokkaido University, Sapporo, 060 Japan.

IEEE Log Number 8714313.

0098-4094/87/0600-0617$01.00 ©1987 IEEE

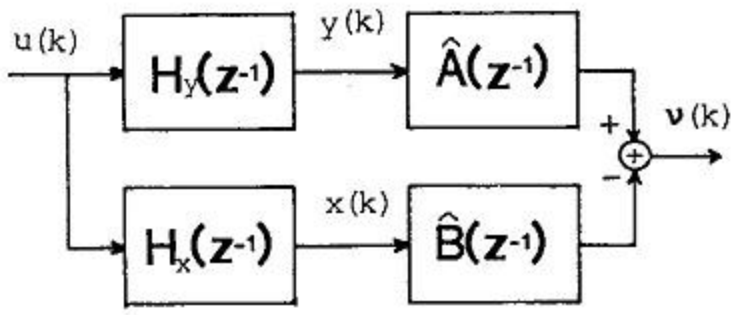

Fig. 1. Block diagram of refined least square problem given in (3).

the criterion, let us assume the following two transfer functions:

$$H_x(z^{-1}) = Z[h_x(k)] \quad x(k) = h_x(k) * u(k)$$
$$H_y(z^{-1}) = Z[h_y(k)] \quad y(k) = h_y(k) * u(k) \tag{1}$$

where $*$ denotes a convolution, and $Z[\ ]$ denotes z-transformation. The stochastic variable $u(k)$ is a zero mean white Gaussian process with a variance σ_u^2. The functions $H_x(z^{-1})$ and $H_y(z^{-1})$ are stable transfer functions. According to (1), it turns out that stochastic variables $x(k)$ and $y(k)$ are represented with $u(i)$ $(i = 1, 2, \cdots, k)$. Let us call $H_x(z^{-1})$ and $H_y(z^{-1})$ reference models.

For the reference models, define the following estimation models:

$$\hat{A}(z^{-1}) = 1 + \hat{a}_1 z^{-1} + \cdots + \hat{a}_s z^{-s}$$
$$\hat{B}(z^{-1}) = \hat{b}_0 + \hat{b}_1 z^{-1} + \cdots + \hat{b}_t z^{-t} \tag{2}$$

where $\hat{a}_i$ and $\hat{b}_j$ $(i = 1, 2, \cdots, s$ and $j = 0, 1, \cdots, t)$ are, respectively, AR parameters and MA parameters (explained later). From (1) and (2), define a new criterion as

$$V_{s,t} = \sigma_u^2/(2\pi j) \oint_{|z|=1} |H_y(z^{-1})\hat{A}(z^{-1}) - H_x(z^{-1})\hat{B}(z^{-1})|^2 \, dz/z. \tag{3}$$

Minimizing this criterion corresponds to calculating the coefficients of $\hat{A}(z^{-1})$ and $\hat{B}(z^{-1})$ which minimize the mean value of $\nu(k)^2$, shown in Fig. 1. In other words, by using the Parseval equality, (3) is rewritten as

$$\begin{aligned} V_{s,t} &= E\left[\left(\hat{A}(z^{-1})y(k) - \hat{B}(z^{-1})x(k)\right)^2\right] \\ &= E\Big[\big(y(k) + \hat{a}_1 y(k-1) \cdots + \hat{a}_s y(k-s) \\ &\quad - \hat{b}_0 x(k) - \hat{b}_1 x(k-1) \cdots - \hat{b}_t x(k-t)\big)^2\Big]. \end{aligned} \tag{4}$$

The criterion of (3) is the generalized form of the criterion proposed by Levinson and Mullis-Roberts. If the reference model $H_x(z^{-1})$ is zero, we get Levinson's criterion from (3) [2]. This criterion has been used for AR parameter estimation based on a least mean square problem. If $H_x(z^{-1}) = 1$, the Mullis-Roberts criterion is obtained from (3) [7]. The Mullis-Roberts criterion has been given as a modified least mean square problem for ARMA parameter estimation.

The coefficients $\hat{a}_i$ $(i = 1, \cdots, s)$ and $\hat{b}_j$ $(j = 0, \cdots, t)$ which minimize $V_{s,t}$ of (4) are calculated as follows [2], [8], [12]:

$$[1 \quad \hat{\boldsymbol{a}}_{s,t} \mid \hat{b}_0 \quad \hat{\boldsymbol{b}}_{s,t}]\boldsymbol{R}_{s,t} = [\min V_{s,t} \quad \boldsymbol{0} \mid 0 \quad \boldsymbol{0}] \tag{5}$$

where $\min V_{s,t}$ is the minimal value of $V_{s,t}$, and each vector and matrix are defined as

$$\begin{aligned} &\hat{\boldsymbol{a}}_{s,t} = [\hat{a}_1 \cdots \hat{a}_s] \quad \hat{\boldsymbol{b}}_{s,t} = [\hat{b}_1 \cdots \hat{b}_t] \\ &\boldsymbol{R}_{s,t} = E\left[\boldsymbol{h}_{s,t}(k)^T \quad \boldsymbol{h}_{s,t}(k)\right] \\ &\boldsymbol{h}_{s,t}(k) = [y(k) \cdots y(k-s) \mid -x(k) \cdots -x(k-t)]. \end{aligned} \tag{6}$$

In the above equation, the superscript T denotes transpose. In this paper, all vectors are defined as row vectors. Thus, the column vector has the transpose T at its superscript. Equation (5) is the normal equation for ARMA parameter estimation. This is quite similar to the normal equation for AR parameter estimation.

If $x(k)$ $(k = 1, 2, \cdots)$ are input signals and $y(k)$ $(k = 1, 2, \cdots)$ are output signals, the whole reference model $H(z^{-1})$ is given as

$$H(z^{-1}) = H_y(z^{-1})/H_x(z^{-1}). \tag{7}$$

Equation (7) is derived from

$$\begin{aligned} &y(k) = H(z^{-1})x(k) \quad y(k) = H_y(z^{-1})u(k) \\ &x(k) = H_x(z^{-1})u(k) \end{aligned} \tag{8}$$

According to (3), if $V_{s,t} = 0$, we get

$$\begin{aligned} H(z^{-1}) &= H_y(z^{-1})/H_x(z^{-1}) \\ &= \hat{B}(z^{-1})/\hat{A}(z^{-1}). \end{aligned} \tag{9}$$

Thus, $\hat{A}(z^{-1})$ and $\hat{B}(z^{-1})$ are called, respectively, the AR part and the MA part of an estimated ARMA model. Under ordinary circumstances, it is hard to find the ARMA parameters which make $V_{s,t}$ zero. If $V_{s,t}$ is not zero because of certain errors (for example, the disturbance for the signal $y(k)$ and $x(k)$, and the calculation errors), the ARMA parameters are calculated as the best approximation on $V_{s,t}$ of (3).

III. Four Prediction Errors

This section introduces the four estimation errors which are employed to solve (5) with a small amount of calculation cost. As defined in the previous section, $x(k)$ and $y(k)$ are an input signal and an output signal, respectively. For these input and output signals, let us define the following four estimation models:

$$\hat{x}_f(k) = -\sum_{i=1}^{t} \hat{b}_i^x x(k-i) + \sum_{j=1}^{s} \hat{a}_j^x y(k-j) \tag{10}$$

where $\hat{x}_f(k)$ is a forward estimation signal for $x(k)$;

$$\hat{y}_f(k) = -\sum_{j=1}^{s} \hat{a}_j^y y(k-j) + \sum_{i=1}^{t} \hat{b}_i^y x(k-i) \tag{11}$$

where $\hat{y}_f(k)$ is a forward estimation signal for $y(k)$;

$$\hat{x}_b(k-t) = -\sum_{i=0}^{t-1} \hat{b}_i^\gamma x(k-i) + \sum_{j=0}^{s-1} \hat{a}_j^\gamma y(k-j) \tag{12}$$

where $\hat{x}_b(k-t)$ is a backward estimation signal for $x(k-$

t); and

$$\hat{y}_b(k-s) = -\sum_{j=0}^{s-1} \hat{a}_j^{\xi} y(k-j) + \sum_{i=0}^{t-1} \hat{b}_i^{\xi} x(k-i) \quad (13)$$

where $\hat{y}_b(k-s)$ is a backward estimation signal for $y(k-s)$. From (10)–(13), the following estimation errors are defined at the time k:

$$\begin{aligned} \boldsymbol{v}_{s,t}(k) &= [-v_{s,t}^x(k) \quad v_{s,t}^y(k)] \\ &= [-x(k)+\hat{x}_f(k) \quad y(k)-\hat{y}_f(k)] = \boldsymbol{h}_{s,t}(k)\boldsymbol{\theta}_{s,t}^T \\ \gamma_{s,t}(k) &= x(k-t)-\hat{x}_b(k-t) = -\boldsymbol{h}_{s,t}(k)\boldsymbol{\gamma}_{s,t}^T \\ \xi_{s,t}(k) &= y(k-s)-\hat{y}_b(k-s) = \boldsymbol{h}_{s,t}(k)\boldsymbol{\xi}_{s,t}^T \end{aligned} \quad (14)$$

where $\boldsymbol{\theta}_{s,t}$, $\boldsymbol{\gamma}_{s,t}$, and $\boldsymbol{\xi}_{s,t}$ are defined as

$$\boldsymbol{\theta}_{s,t} = \left[\begin{array}{cccc|cccc} 0 & \hat{a}_1^x & \cdots & \hat{a}_s^x & 1 & \hat{b}_1^x & \cdots & \hat{b}_t^x \\ 1 & \hat{a}_1^y & \cdots & \hat{a}_s^y & 0 & \hat{b}_1^y & \cdots & \hat{b}_t^y \end{array}\right]$$

$$\begin{aligned} \boldsymbol{\gamma}_{s,t} &= [\hat{a}_0^{\gamma} \cdots \hat{a}_{s-1}^{\gamma} \quad 0 \mid \hat{b}_0^{\gamma} \cdots \hat{b}_{t-1}^{\gamma} \quad 1] \\ \boldsymbol{\xi}_{s,t} &= [\hat{a}_0^{\xi} \cdots \hat{a}_{s-1}^{\xi} \quad 1 \mid \hat{b}_0^{\xi} \cdots \hat{b}_{t-1}^{\xi} \quad 0]. \end{aligned} \quad (15)$$

The two forward estimation errors are represented in a vector (i.e., $\boldsymbol{v}_{s,t}(k)$). However, the two backward estimation errors are defined as $\gamma_{s,t}(k)$ and $\xi_{s,t}(k)$ independently. In the following section, these notations play important roles in ARMA parameter calculation and ARMA lattice filter design. The purpose in representing the backward errors independently, in contrast to the errors defined in other lattice filters [1], [5], [13], is the realization of the new lattice filter proposed in this paper (i.e., a filter based on an independent order update of the AR part and MA part).

The above estimation errors are determined as they satisfy the following orthogonal conditions:

$$E[\boldsymbol{v}_{s,t}(k) \quad y(k-j)] = [0 \quad 0]$$
$$E[\boldsymbol{v}_{s,t}(k) \quad x(k-i)] = [0 \quad 0] \quad (16)$$
$$E[\gamma_{s,t}(k-1) \quad y(k-j)] = 0$$
$$E[\gamma_{s,t}(k-1) \quad x(k-i)] = 0 \quad (17)$$
$$E[\xi_{s,t}(k-1) \quad y(k-j)] = 0$$
$$E[\xi_{s,t}(k-1) \quad x(k-i)] = 0 \quad (18)$$

where $i=1,2,\cdots,t$ and $j=1,2,\cdots,s$.

From (16)–(18), we get the following equations:

$$\boldsymbol{\theta}_{s,t}\boldsymbol{R}_{s,t} = \left[\begin{array}{cc|cc} V_{s,t}^{xy} & \mathbf{0} & V_{s,t}^{x} & \mathbf{0} \\ V_{s,t}^{y} & \mathbf{0} & V_{s,t}^{xy} & \mathbf{0} \end{array}\right] \quad (19)$$

$$\begin{bmatrix} \boldsymbol{\gamma}_{s,t} \\ \boldsymbol{\xi}_{s,t} \end{bmatrix} \boldsymbol{R}_{s,t} = \left[\begin{array}{cc|cc} \mathbf{0} & V_{s,t}^{\gamma\xi} & \mathbf{0} & V_{s,t}^{\gamma} \\ \mathbf{0} & V_{s,t}^{\xi} & \mathbf{0} & V_{s,t}^{\gamma\xi} \end{array}\right] \quad (20)$$

where

$$\boldsymbol{V}_{s,t} = \begin{bmatrix} V_{s,t}^{x} & V_{s,t}^{xy} \\ V_{s,t}^{xy} & V_{s,t}^{y} \end{bmatrix} = E\left[\boldsymbol{v}_{s,t}(k)^T \boldsymbol{v}_{s,t}(k)\right] \quad (21)$$

$$\begin{aligned} V_{s,t}^{\gamma} &= E\left[(\gamma_{s,t}(k-1))^2\right] \quad V_{s,t}^{\xi} = E\left[(\xi_{s,t}(k-1))^2\right] \\ V_{s,t}^{\gamma\xi} &= -E\left[\gamma_{s,t}(k-1)\xi_{s,t}(k-1)\right]. \end{aligned} \quad (22)$$

Equations (19) and (20) are derived in Appendix I. From (19), each value in (5) is given as

$$\begin{aligned} \hat{a}_i &= \hat{a}_i^y - \hat{a}_i^x \cdot V_{s,t}^{xy}/V_{s,t}^x \qquad (i=1,2,\cdots,s) \\ \hat{b}_0 &= -V_{s,t}^{xy}/V_{s,t}^x \\ \hat{b}_j &= \hat{b}_j^y - \hat{b}_j^x \cdot V_{s,t}^{xy}/V_{s,t}^x \qquad (j=1,2,\cdots,t) \\ \min V_{s,t} &= V_{s,t}^y - (V_{s,t}^{xy})^2/V_{s,t}^x. \end{aligned} \quad (23)$$

Equation (23) is derived as follows: In (5), the first element of the estimation parameter vector is 1. All elements except the first element in the right-hand side of (5) are zero. Thus, if the $(s+2)$th element of the second row in the right-hand side of (19) (i.e., $V_{s,t}^{xy}$) becomes zero by using the first row in the right-hand side of (19), then the estimation parameter vector associated with this second row satisfies (5). In other words, (23) is satisfied.

If we solve the equations in (19) and (20), all of the values in (5) can be easily obtained from (23).

IV. Recursive Formulas to Solve the Normal Equation for ARMA Parameters

In the previous section, we introduced four estimation models and four estimation errors. The estimation parameter matrix and vectors (i.e., $\boldsymbol{\theta}_{s,t}$, $\boldsymbol{\gamma}_{s,t}$, and $\boldsymbol{\xi}_{s,t}$) satisfy (19) and (20). In this section, let us show how to calculate the matrix and vectors with little calculation cost. If we calculate an inverse matrix to solve the given matrix equation in (5), we need the calculation cost in proportion to $(s+t+1)^3$. But if the recursive formulas are used as we propose later, we need just the calculation cost in proportion to $(s+t+1)^2$.

There are two types of recursive formulas. One is the AR-type recursive formula, which calculates ARMA parameters as the AR order of an estimation model increases by one. The other is the MA-type recursive formula, which calculates ARMA parameters as the MA order of an estimation model increases by one. Before deriving these formulas, let us define the four matrices $\boldsymbol{I}_1$, $\boldsymbol{I}_2$, $\boldsymbol{I}_3$, and $\boldsymbol{I}_4$ with $(s+t+2 \times s+t+3)$ dimension:

$$\begin{aligned} &[w_1 \cdots w_{s+1} \mid w_{s+2} \cdots w_{s+t+2}]\boldsymbol{I}_1 \\ &\qquad = [w_1 \cdots w_{s+1} \quad 0 \mid w_{s+2} \cdots w_{s+t+2}] \\ &[w_1 \cdots w_{s+1} \mid w_{s+2} \cdots w_{s+t+2}]\boldsymbol{I}_2 \\ &\qquad = [0 \quad w_1 \cdots w_{s+1} \mid 0 \quad w_{s+2} \cdots w_{s+t+1}] \quad (24) \\ &[w_1 \cdots w_{s+1} \mid w_{s+2} \cdots w_{s+t+2}]\boldsymbol{I}_3 \\ &\qquad = [w_1 \cdots w_{s+1} \mid w_{s+2} \cdots w_{s+t+2} \quad 0] \\ &[w_1 \cdots w_{s+1} \mid w_{s+2} \cdots w_{s+t+2}]\boldsymbol{I}_4 \\ &\qquad = [0 \quad w_1 \cdots w_s \mid 0 \quad w_{s+2} \cdots w_{s+t+2}]. \quad (25) \end{aligned}$$

The above matrix is easily obtained by a $(s+t+2)$-dimensional vector $\boldsymbol{e}_i$ where all elements of $\boldsymbol{e}_i$ are zero except the ith element, which is 1. For example, $\boldsymbol{I}_1$ is given as

$$\boldsymbol{I}_1 = [\boldsymbol{e}_1^T \quad \boldsymbol{e}_2^T \cdots \boldsymbol{e}_{s+1}^T \quad \mathbf{0}^T \mid \boldsymbol{e}_{s+2}^T \cdots \boldsymbol{e}_{s+t+2}^T]. \quad (26)$$

These matrices are used in the recursive formulas introduced later.

A. AR-Type Recursive Formula

Let us show the AR-type recursive formula. This recursive formula estimates the parameters of an ARMA estimation model as the AR order of this model increases by one. In other words, the AR-type recursive formula assumes that the parameters of the ARMA estimation model with s AR order and t MA order, abbreviated as the (s, t) ARMA parameters, have already been calculated, and then calculates the $(s+1, t)$ ARMA parameters. Since the AR order increases by one after this calculation, this formula is regarded as the AR order update algorithm which allows ARMA parameter estimation.

By using (24), we get

$$\boldsymbol{\theta}_{s,t}\boldsymbol{I}_1\boldsymbol{R}_{s+1,t} = \left[\begin{array}{ccc|cc} V^{xy}_{s,t} & \mathbf{0} & \tau_1 & V^{x}_{s,t} & \mathbf{0} \\ V^{y}_{s,t} & \mathbf{0} & \tau_2 & V^{xy}_{s,t} & \mathbf{0} \end{array}\right] \tag{27}$$

$$\begin{bmatrix} \boldsymbol{\gamma}_{s,t} & \boldsymbol{I}_1 \\ \boldsymbol{\xi}_{s,t} & \boldsymbol{I}_1 \end{bmatrix}\boldsymbol{R}_{s+1,t} = \left[\begin{array}{ccc|cc} \mathbf{0} & V^{\gamma\xi}_{s,t} & \tau_3 & \mathbf{0} & V^{\gamma}_{s,t} \\ \mathbf{0} & V^{\xi}_{s,t} & \tau_4 & \mathbf{0} & V^{\gamma\xi}_{s,t} \end{array}\right] \tag{28}$$

$$\boldsymbol{\xi}_{s,t}\boldsymbol{I}_2\boldsymbol{R}_{s+1,t} = \left[\tau_2 \quad \mathbf{0} \quad V^{\xi}_{s,t} \;\vdots\; \tau_1 \quad \mathbf{0}\right] \tag{29}$$

where

$$\begin{aligned} [\tau_1 \quad \tau_2] &= E[\boldsymbol{\xi}_{s,t}(k-1)\boldsymbol{v}_{s,t}(k)] \\ \tau_3 &= -E[y(k-s-1)\boldsymbol{\gamma}_{s,t}(k)] \\ \tau_4 &= E[y(k-s-1)\boldsymbol{\xi}_{s,t}(k)]. \end{aligned}$$

Equations (27)–(29) are derived in Appendix II. As already defined, the AR-type recursive formula calculates the parameter matrix and vectors $\boldsymbol{\theta}_{s+1,t}$, $\boldsymbol{\gamma}_{s+1,t}$, and $\boldsymbol{\xi}_{s+1,t}$ by using (27)–(29). From (19) and (20), $\boldsymbol{\theta}_{s+1,t}$, $\boldsymbol{\gamma}_{s+1,t}$, and $\boldsymbol{\xi}_{s+1,t}$ satisfy

$$\boldsymbol{\theta}_{s+1,t} \quad \boldsymbol{R}_{s+1,t} = \left[\begin{array}{cc|cc} V^{xy}_{s+1,t} & \mathbf{0} & V^{x}_{s+1,t} & \mathbf{0} \\ V^{y}_{s+1,t} & \mathbf{0} & V^{xy}_{s+1,t} & \mathbf{0} \end{array}\right]$$

$$\begin{bmatrix} \boldsymbol{\gamma}_{s+1,t} \\ \boldsymbol{\xi}_{s+1,t} \end{bmatrix}\boldsymbol{R}_{s+1,t} = \left[\begin{array}{cc|cc} \mathbf{0} & V^{\gamma\xi}_{s+1,t} & \mathbf{0} & V^{\gamma}_{s+1,t} \\ \mathbf{0} & V^{\xi}_{s+1,t} & \mathbf{0} & V^{\gamma\xi}_{s+1,t} \end{array}\right]. \tag{30}$$

Comparing the right-hand sides of (27)–(29) with those of (30), we can obtain (30) if the $(s+2)$th elements in the first and second rows of (27) become zero and the $(s+1)$th elements in the first and second rows of (28) become zero. In order to make these elements zero, this recursive formula employs (29). The AR-type recursive formula is given as

$$\begin{aligned} \boldsymbol{\theta}_{s+1,t} &= \boldsymbol{\theta}_{s,t}\boldsymbol{I}_1 + \boldsymbol{\mu}_1^T\boldsymbol{\xi}_{s,t}\boldsymbol{I}_2 \\ \boldsymbol{\gamma}_{s+1,t} &= [\boldsymbol{\gamma}_{s,t} + \mu_2\boldsymbol{\xi}_{s,t}]\boldsymbol{I}_1 \\ \boldsymbol{\xi}_{s+1,t} &= \boldsymbol{\xi}_{s,t}\boldsymbol{I}_2 + [\mu_3\boldsymbol{\theta}_{s,t} + \mu_4\boldsymbol{\gamma}_{s,t} + \mu_5\boldsymbol{\xi}_{s,t}]\boldsymbol{I}_1 \end{aligned} \tag{31}$$

$$\begin{aligned} \boldsymbol{\mu}_1 &= -\left(V^{\xi}_{s,t}\right)^{-1}[\tau_1 \quad \tau_2] \\ \mu_2 &= -V^{\gamma\xi}_{s,t}/V^{\xi}_{s,t} \\ \boldsymbol{\mu}_3 &= -[\tau_1 \quad \tau_2]\boldsymbol{V}^{-1}_{s,t} \\ \mu_4 &= \left(V^{\gamma\xi}_{s,t}\tau_4 - V^{\xi}_{s,t}\tau_3\right)\Big/\left[\left(V^{\gamma\xi}_{s,t}\right)^2 - V^{\xi}_{s,t}V^{\gamma}_{s,t}\right] \\ \mu_5 &= \mu_4\mu_2 \end{aligned} \tag{32}$$

$$\begin{aligned} \boldsymbol{V}_{s+1,t} &= \boldsymbol{V}_{s,t} + \boldsymbol{\mu}_1^T[\tau_1 \quad \tau_2] \\ V^{\gamma\xi}_{s+1,t} &= \tau_3 + \mu_2\tau_4 \\ V^{\xi}_{s+1,t} &= V^{\xi}_{s,t} + [\tau_1 \quad \tau_2]\boldsymbol{\mu}_3^T + \mu_4\tau_3 + \mu_5\tau_4 \\ V^{\gamma}_{s+1,t} &= V^{\gamma}_{s,t} + \mu_2 V^{\gamma\xi}_{s,t}. \end{aligned} \tag{33}$$

The above equations are derived in Appendix III.

B. MA-Type Recursive Formula

Next let us show the recursive formula which calculates ARMA parameters as the MA order of an estimation model increases by one. This formula assumes that the (s, t) ARMA parameters have already been calculated, and then calculates the $(s, t+1)$ ARMA parameters. Since the MA order increases by one after this calculation, this formula is regarded as the MA order update algorithm which allows ARMA parameter estimation.

According to (15)–(20), the MA-type recursive formula is the complementary form of the AR-type recursive formula. In addition, the MA-type recursive formula is equal to the AR-type recursive formula if the variables associated with the input signal $x(k)$ and the variables associated with the output signal $y(k)$ are interchanged. Thus, if we replace $y(k)$, $\boldsymbol{\gamma}_{s,t}$ and $-\boldsymbol{\gamma}_{s,t}(k)$ with $-x(k)$, $\boldsymbol{\xi}_{s,t}$ and $\boldsymbol{\xi}_{s,t}(k)$, and vice versa, then the MA-type recursive formula is derived. The MA-type recursive formula is given as

$$\begin{aligned} \boldsymbol{\theta}_{s,t+1} &= \boldsymbol{\theta}_{s,t}\boldsymbol{I}_3 + \boldsymbol{\eta}_1^T\boldsymbol{\gamma}_{s,t}\boldsymbol{I}_4 \\ \boldsymbol{\xi}_{s,t+1} &= [\boldsymbol{\xi}_{s,t} + \eta_2\boldsymbol{\gamma}_{s,t}]\boldsymbol{I}_3 \\ \boldsymbol{\gamma}_{s,t+1} &= \boldsymbol{\gamma}_{s,t}\boldsymbol{I}_4 + [\eta_3\boldsymbol{\theta}_{s,t} + \eta_4\boldsymbol{\xi}_{s,t} + \eta_5\boldsymbol{\gamma}_{s,t}]\boldsymbol{I}_3 \end{aligned} \tag{34}$$

$$\begin{aligned} \boldsymbol{\eta}_1 &= -\left(V^{\gamma}_{s,t}\right)^{-1}[\tau_1' \quad \tau_2'] \\ \eta_2 &= -V^{\gamma\xi}_{s,t}/V^{\gamma}_{s,t} \\ \boldsymbol{\eta}_3 &= -[\tau_1' \quad \tau_2']\boldsymbol{V}^{-1}_{s,t} \\ \eta_4 &= \left(V^{\gamma\xi}_{s,t}\tau_4' - V^{\gamma}_{s,t}\tau_3'\right)\Big/\left[\left(V^{\gamma\xi}_{s,t}\right)^2 - V^{\gamma}_{s,t}V^{\xi}_{s,t}\right] \\ \eta_5 &= \eta_4\eta_2 \end{aligned} \tag{35}$$

$$\begin{aligned} \boldsymbol{V}_{s+1,t} &= \boldsymbol{V}_{s,t} + \boldsymbol{\eta}_1^T[\tau_1' \quad \tau_2'] \\ V^{\gamma\xi}_{s,t+1} &= \tau_3' + \eta_2\tau_4' \\ V^{\gamma}_{s,t+1} &= V^{\gamma}_{s,t} + [\tau_1' \quad \tau_2']\boldsymbol{\eta}_3^T + \eta_4\tau_3' + \eta_5\tau_4' \\ V^{\xi}_{s,t+1} &= V^{\xi}_{s,t} + \eta_2 V^{\gamma\xi}_{s,t} \end{aligned} \tag{36}$$

where

$$\begin{aligned} [\tau_1' \quad \tau_2'] &= -E[\boldsymbol{\gamma}_{s,t}(k-1)\boldsymbol{v}_{s,t}(k)] \\ \tau_3' &= -E[x(k-t-1)\boldsymbol{\xi}_{s,t}(k)] \\ \tau_4' &= E[x(k-t-1)\boldsymbol{\gamma}_{s,t}(k)]. \end{aligned}$$

By using (31) and (34), the ARMA parameters with arbitrary AR and MA orders can be recursively calculated from the correlation data of input and output sequences. These formulas provide lower calculation cost than the

inverse matrix algorithm which estimates ARMA parameters in (5) by using an inverse matrix. Thus, let us call these formulas the fast recursive method, abbreviated FRM.

If the two proposed recursive algorithms join together, we get the ARMA-type recursive formula which calculates ARMA parameters as the AR and MA orders of an estimation model increase by one simultaneously. This formula is not essential but is useful in some cases. This ARMA-type recursive formula has already been proposed in [5] and [8].

V. Elementary Sections Used in ARMA Digital Lattice Filter

Levinson's algorithm is the recursive formula which solves the normal equation for the AR model with the lowest calculation cost. The AR digital lattice inverse filter can be designed by using the prediction errors defined in this recursive formula. The term "inverse filter" has been coined to describe the whitening filter. The observed stochastic signals are inputted to the whitening filter and the whitened stochastic signals are obtained from this filter. In addition, an AR lattice filter can be designed from the obtained AR lattice inverse filter easily. This filter synthesizes the observed stochastic signals with white Gaussian input signals.

A similar procedure is applied to the recursive formulas given in the previous section. In other words, from the proposed formulas, we can easily design an ARMA digital lattice inverse filter. Then, the ARMA digital lattice filter is also designed. Associated with the recursive formulas (i.e., the AR-type recursive formula and the MA-type recursive formula), we can design two elementary sections used in an ARMA digital lattice filter. Let us call the two sections the AR-type elementary lattice inverse section and the MA-type elementary lattice inverse section which correspond to, respectively, the AR-type recursive formula and the MA-type recursive formula.

Let us design the AR-type elementary lattice inverse section first. From (6) and (24), the following equations are satisfied:

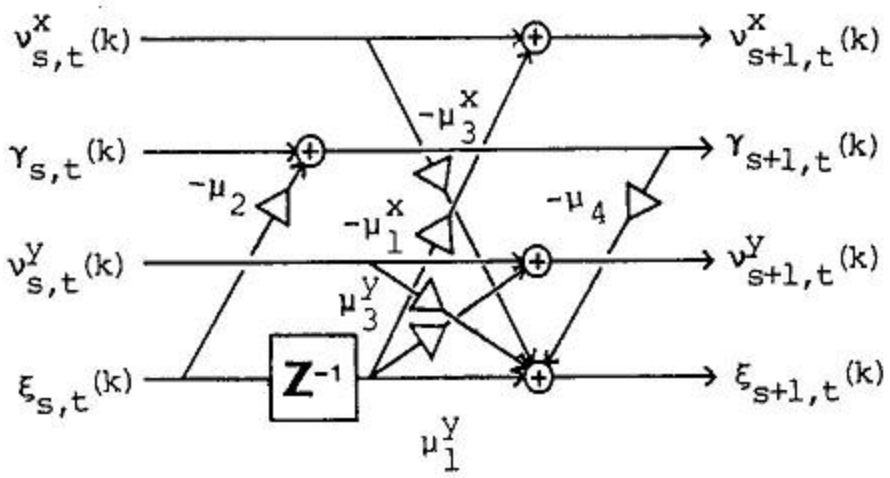

Fig. 2. AR-type elementary lattice inverse section.

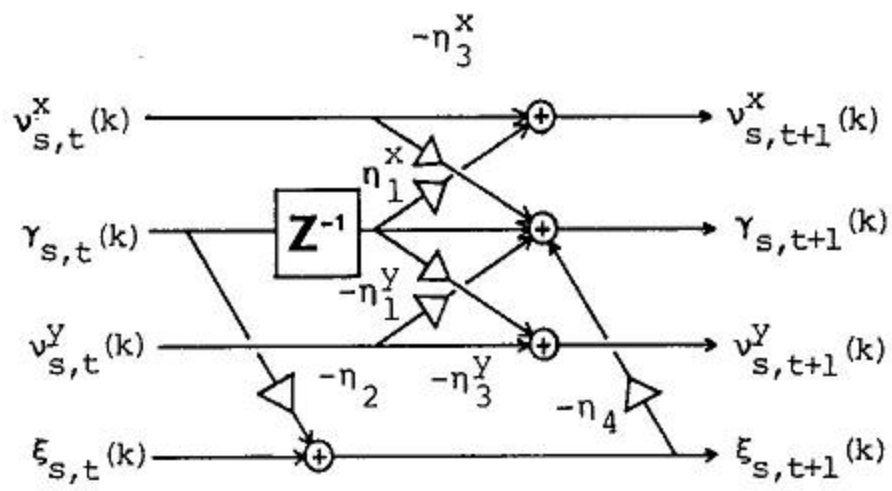

Fig. 3. MA-type elementary lattice inverse section.

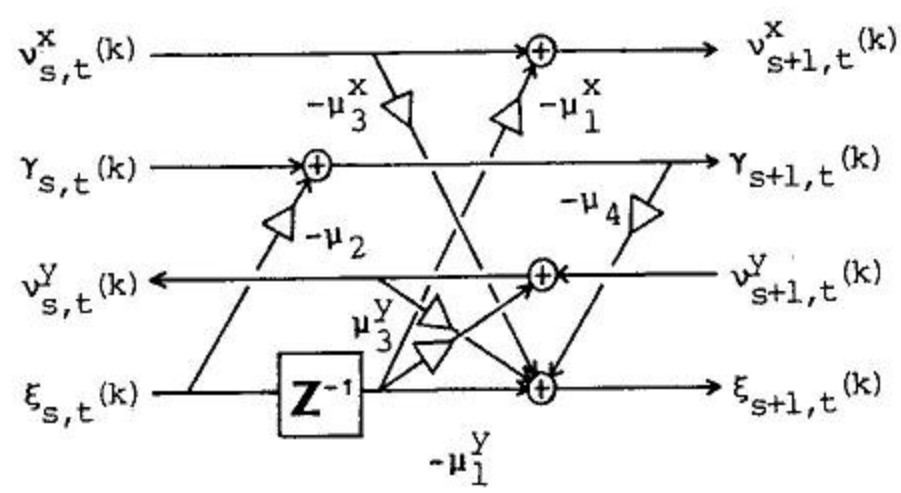

Fig. 4. AR-type elementary lattice section.

AR-type elementary lattice inverse section is designed in Fig. 2. In this figure, two forward estimation errors (i.e., $\nu^x_{s,t}(k)$ and $\nu^y_{s,t}(k)$) are used instead of $\boldsymbol{\nu}_{s,t}(k)$.

$$\begin{aligned}\boldsymbol{h}_{s+1,t}(k)\boldsymbol{I}_1^T &= [y(k)\cdots y(k-s) \;\vdots\; -x(k)\cdots -x(k-t+1) \quad -x(k-t)]\\ \boldsymbol{h}_{s+1,t}(k)\boldsymbol{I}_2^T &= [y(k-1)\cdots y(k-s-1) \;\vdots\; -x(k-1)\cdots -x(k-t) \quad 0].\end{aligned} \tag{37}$$

Thus, the AR-type error recursions are derived from (31) as follows:

$$\begin{aligned}\boldsymbol{\nu}_{s+1,t}(k) &= \boldsymbol{\nu}_{s,t}(k) + [\mu_1^x \quad \mu_1^y]\,\xi_{s,t}(k-1)\\ \gamma_{s+1,t}(k) &= \gamma_{s,t}(k) - \mu_2\xi_{s,t}(k)\\ \xi_{s+1,t}(k) &= \xi_{s,t}(k-1) + [\mu_3^x \quad \mu_3^y]\,\boldsymbol{\nu}_{s,t}(k)^T - \mu_4\gamma_{s+1,t}(k)\end{aligned} \tag{38}$$

where $\boldsymbol{\mu}_1 = [\mu_1^x \quad \mu_1^y]$ and $\boldsymbol{\mu}_3 = [\mu_3^x \quad \mu_3^y]$. Equations (37) and (38) are derived in Appendix IV. From (38), the

The error recursions for the MA-type elementary lattice inverse section are derived from (34) as follows:

$$\begin{aligned}\boldsymbol{\nu}_{s,t+1}(k) &= \boldsymbol{\nu}_{s,t}(k) - [\eta_1^x \quad \eta_1^y]\,\gamma_{s,t}(k-1)\\ \xi_{s,t+1}(k) &= \xi_{s,t}(k) - \eta_2\gamma_{s,t}(k)\\ \gamma_{s,t+1}(k) &= \gamma_{s,t}(k-1) - [\eta_3^x \quad \eta_3^y]\,\boldsymbol{\nu}_{s,t}(k)^T - \eta_4\xi_{s,t+1}(k)\end{aligned} \tag{39}$$

where $\boldsymbol{\eta}_1 = [\eta_1^x \quad \eta_1^y]$ and $\boldsymbol{\eta}_3 = [\eta_3^x \quad \eta_3^y]$. The above recursions are obtained as the complementary form of the AR-type error recursions.

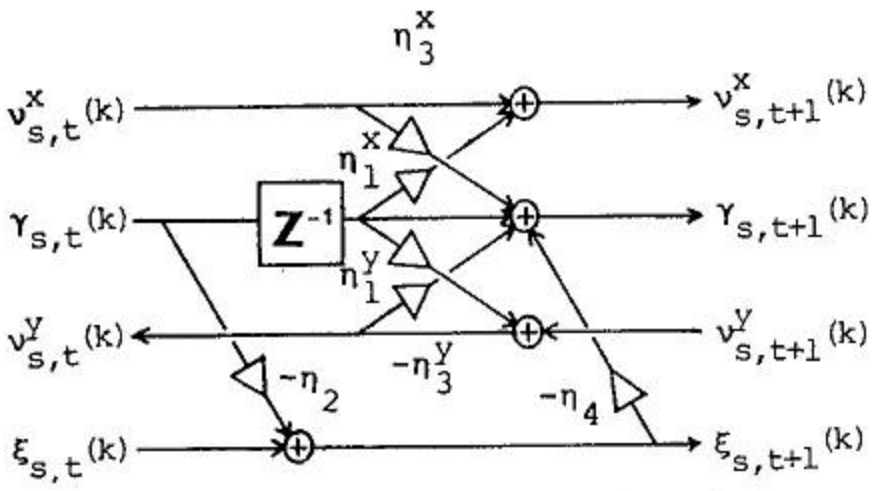

Fig. 5. MA-type elementary lattice section.

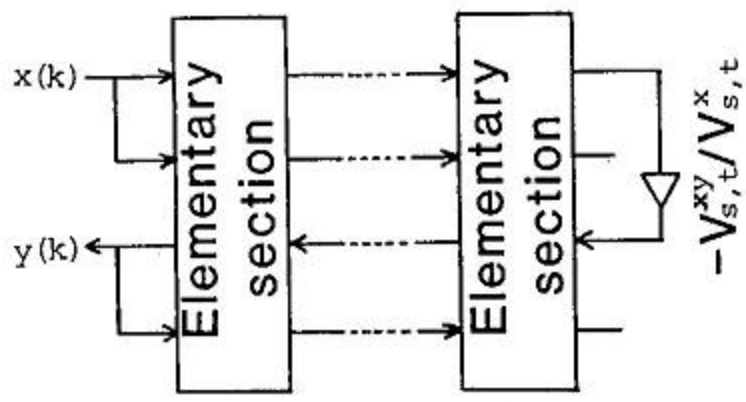

Fig. 6. ARMA digital lattice filter.

The MA-type elementary lattice inverse section is designed in Fig. 3. From the lattice inverse sections designed above, we can design the two lattice sections (i.e., the AR-type lattice elementary section and the MA-type lattice elementary section) shown in Figs. 4 and 5, respectively. In addition, an ARMA digital lattice filter is constructed by these sections, as shown in Fig. 6.

VI. Comparisons Between the Proposed ARMA Lattice Filter and the Other ARMA Lattice Filters

This paper discusses the new FRA and its ARMA lattice filter realization. This method assumes that the correlation data of the output and the input sequences have already been given. In other words, $\boldsymbol{R}_{s,t}$ of (5) is first given and then the (s,t) ARMA parameters are calculated by FRA. The values $\tau_1,\cdots,\tau_4$ and $\tau_1',\cdots,\tau_4'$ used in FRA are easily calculated from the elements of $\boldsymbol{R}_{s,t}$. Thus, this method is regarded as batch processing.

Some other fast algorithms and ARMA lattice filters have been developed. This section compares these algorithms and ARMA lattice filters with our proposed FRA and its lattice filter. Although the algorithms already proposed are essentially batch processing, the adaptive approaches are also derived in the advanced forms. However, the advanced forms slightly change the subject in this paper. In the following discussion, we therefore consider the batch-processing methods. In addition, every method is compared at the orthogonal conditions of estimation errors and at the possibility of an ARMA order update. The conventional fast algorithms and the ARMA lattice filters are put in the following groups:

(VI-1) Lattice joint process [4];
(VI-2) ARMA lattice filter by Lee–Morf–Friedlander [1], [5];

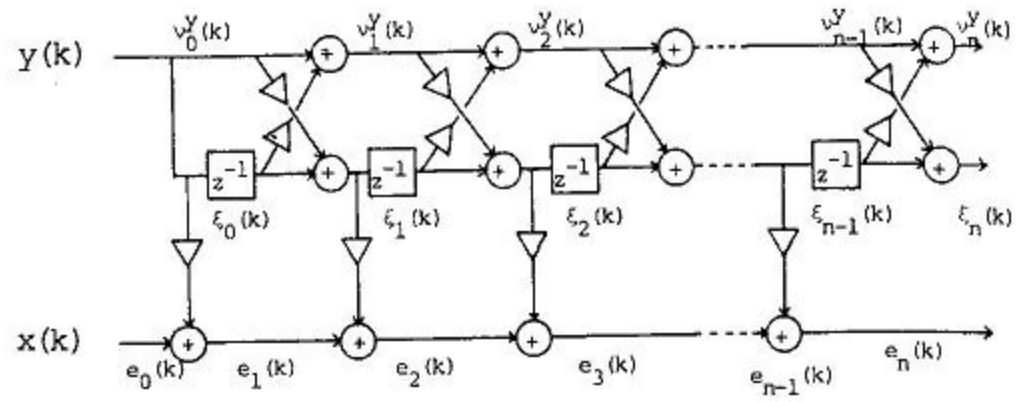

Fig. 7. Joint process ARMA lattice filter.

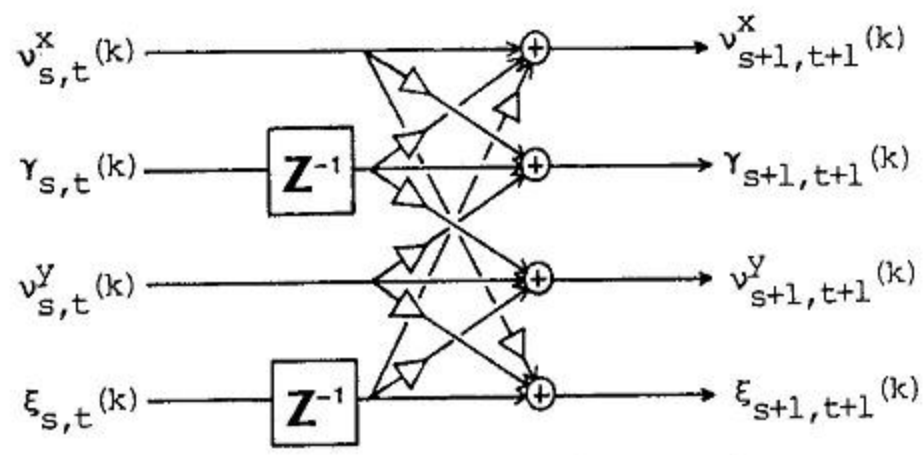

Fig. 8. ARMA-type lattice inverse section.

(VI-3) FRA by Mullis–Roberts [7];
(VI-4) FRA by Benveniste–Chaure [11];
(VI-5) FRA by Monden–Yamada–Arimoto [12].

The lattice joint process estimator (i.e., (VI-1)) developed in [4] is depicted in Fig. 7. In this figure, the orthogonal conditions of $\nu_s^y(k)$ and $\xi_s(k)$ $(s=0,1,\cdots,n)$ are the same as (16) and (18). However, there is no orthogonal condition among e_s. In other words, this filter guarantees the orthogonal conditions on the output $y(k)$ but does not satisfy the orthogonal conditions on the input $x(k)$. Each $e_s(k)$ is represented with $\xi_s(k)$, and $x(k)$ is represented with $e_i(k)$ $(i=1,\cdots,n)$. Thus, if the stochastic property of $x(k)$ is different from that of $y(k)$, this filter may require many elementary sections. Our ARMA lattice filter can realize all the orthogonal conditions on $y(k)$ and $x(k)$. Thus, this compensates for the above disadvantage.

The ARMA lattice filter of (VI-2) also satisfies the orthogonal conditions on $y(k)$ and $x(k)$. The elementary section of this filter is shown in Fig. 8. This section is easily designed by cascading our two elementary sections (i.e., the AR-type elementary lattice inverse section and the MA-type elementary lattice inverse section). This filter is realized as the ARMA-type recursive formula which calculates the $(s+1,s+1)$ ARMA parameters using the assumption that the (s,s) ARMA parameters have already been given. Note that the recursive algorithms of (VI-2) are the simultaneous AR and MA order update. Thus, it cannot increase an AR order or an MA order with an arbitrary arrangement, whereas the new algorithm can. This means that the (VI-2) realization of the ARMA lattice filter is restricted with $s=t$.

The FRA of (VI-3) requires the same restriction (i.e., $s=t$). In addition, this algorithm solves the mean square problem of (3) where $H_x(z^{-1})=1$. In other words, this algorithm assumes that the input $x(k)$ is a white Gaussian process (i.e., $x(k)=u(k)$). Thus, it is not applied to the

reference model with colored input signals. However, the calculation cost of this algorithm is the smallest among ARMA-type FRA's including our algorithm.

The algorithm of (VI-4) can realize the ARMA model with arbitrary AR and MA orders (i.e., $s \neq t$). In addition, it can be applied to the model with colored input signals. However, it needs weak restriction. In other words, this algorithm consists of

Type 1: Evaluation of the $(s+1, t+1)$ error set as a function of the (s, t) error set.

Type 2: Evaluation of the $(s+1, 0)$ error set as a function of the $(s, 0)$ error set.

Type 3: Evaluation of the $(0, t+1)$ error set as a function of the $(0, t)$ error set.

Here, the error set denotes the four estimation errors defined in (14). Thus, the (VI-4) algorithm is an expanded form of (VI-1) and (VI-2). In other words, the recursion of the forward estimation errors in (VI-4) is the same as that of the (VI-1) algorithm. If $s = t$, the (VI-4) algorithm corresponds to the (VI-2) algorithm. Although this algorithm can realize the ARMA model with arbitrary ARMA orders, the arrangement for each filter section is restricted. According to Type 2 and Type 3, this algorithm has to realize either the AR part or the MA part at the first time if $s \neq t$. In other words, it cannot realize the ARMA model with arbitrary arrangement. For example, this algorithm cannot realize the ARMA model with the arrangement of (0,1), (1,1), (2,1), and (3,1) ARMA order. In this example, it has to realize this model with only the arrangement of (1,0), (2,0), and (3,1). The new algorithm proposed in this paper can realize this model without any restrictions for the arrangement. If the orders of the estimation model are already known, it is enough to employ (VI-4). However, if any information of its orders has not been given, the new algorithm may be better than (VI-4).

The algorithm (VI-5) can realize any ARMA model with any arrangement for the orders of the estimation model. However, the errors given in this algorithm, if they can be calculated, do not satisfy orthogonal conditions even for the forward estimation model.

The proposed algorithm compensates for the disadvantage of the above algorithms. It has been shown that each of the algorithms above shows excellent ability for a certain kind of signal processing. However, the proposed FRA together with its lattice filter also presents the same ability since it is an expanded form of the others.

VII. Experimental Results

We carried out some experiments for the proposed ARMA digital lattice filter. In this section, let us show the experimental results. The experiments were performed to solve a model reduction problem. The model reduction problem has been established in system identification [9], [10]. This is used to yield a reduced model from a given reference model with either high order or infinite order. In this section, we show three different ways of approaching the reduction problems by using the proposed ARMA digital lattice filter.

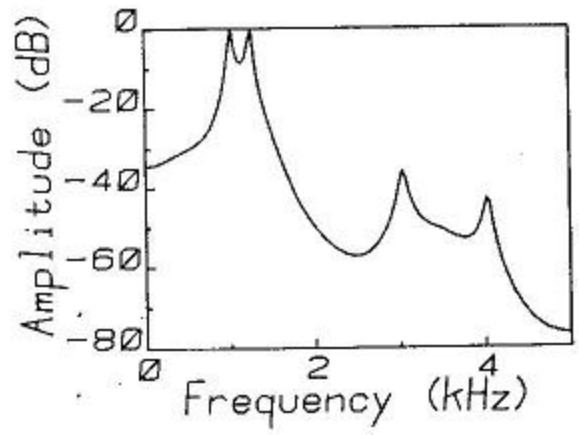

(a)

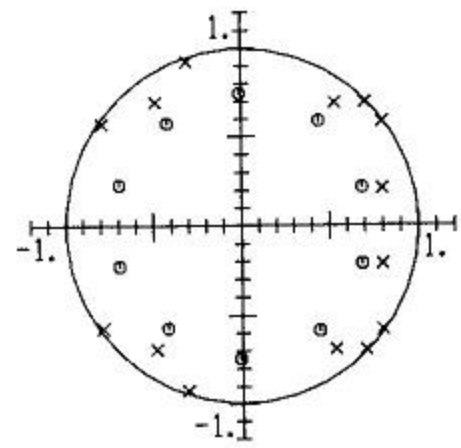

(b)

Fig. 9. (a) Spectrum and (b) pole–zero locations of the reference model.

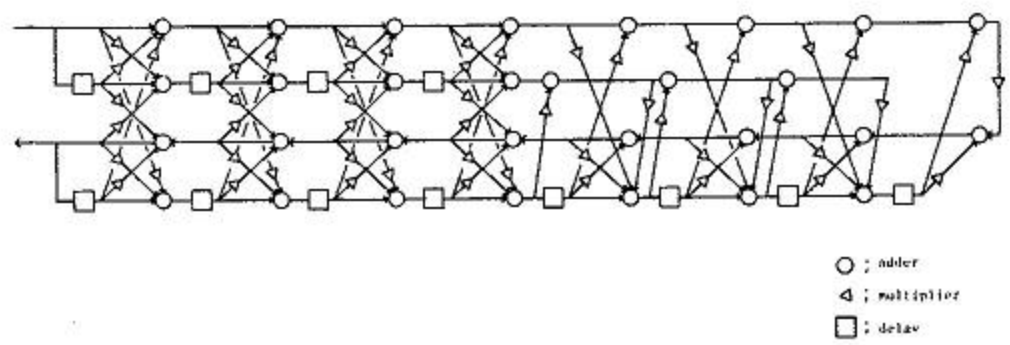

Fig. 10. Designed ARMA lattice filter.

Assume we have the reference model whose spectrum and pole–zero locations are shown in Fig. 9. This model is the ARMA model with 14 AR order and 10 MA order. According to the spectrum, the reference model has four resonances with narrow bandwidth, i.e., 1 kHz, 1.25 kHz, 3 kHz, and 4 kHz (resonance frequency), and two antiresonances with wide bandwidth, i.e., 2.5 kHz and 4.5 kHz (antiresonance frequency).

First, let us consider the following criterion:

$$V_{s,t} = \sigma_u^2/(2\pi j)\oint_{|z|=1} \left| B(z^{-1})\hat{A}(z^{-1}) - A(z^{-1})\hat{B}(z^{-1}) \right|^2 dz/z \quad (40)$$

where the reference model $H(z^{-1})$ is given as $B(z^{-1})/A(z^{-1})$. In the above criterion, $H_y(z^{-1})$ and $H_x(z^{-1})$ of (3) are $A(z^{-1})$ and $B(z^{-1})$, respectively. Thus, the estimated ARMA model is given by $\hat{H}(z^{-1}) = \hat{B}(z^{-1})/\hat{A}(z^{-1})$. Since $B(z^{-1})$ and $A(z^{-1})$ had been already given, we could design the ARMA lattice filter which minimized $V_{s,t}$ by using the proposed method. The designed ARMA lattice filter is shown in Fig. 10. The left four sections of this filter were designed with the ARMA-type lattice section. These sections were designed by the two proposed elementary sections. The right four sections

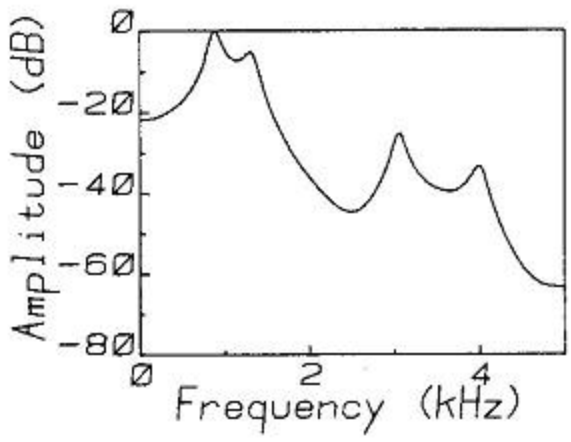

(a)

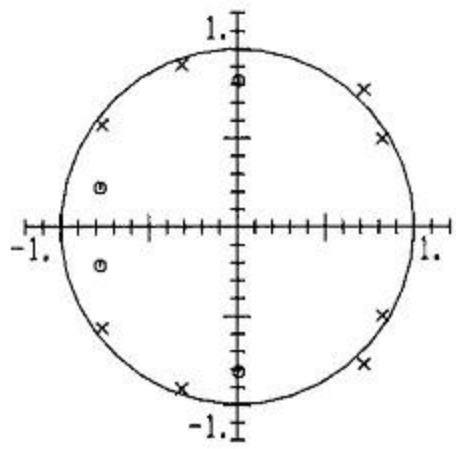

(b)

Fig. 11. (a) Spectrum and (b) pole–zero locations of the designed ARMA lattice filter based on $V_{s,t}$ of (40).

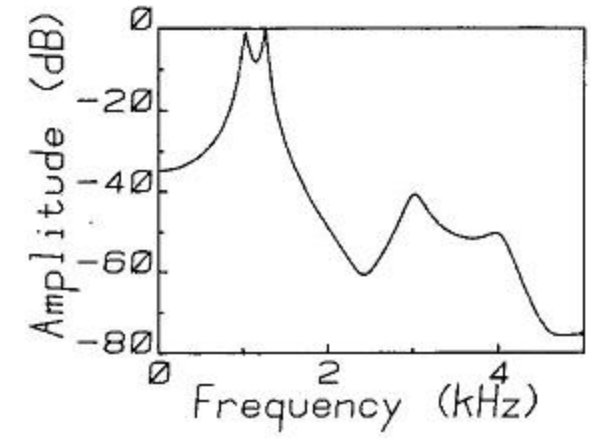

(a)

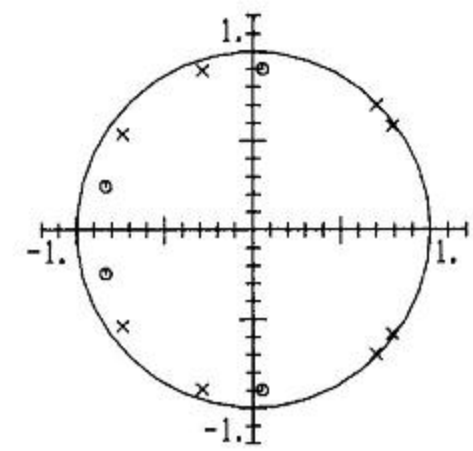

(b)

Fig. 12. (a) Spectrum and (b) pole–zero locations of the designed ARMA lattice filter based on $V'_{s,t}$ of (41).

were the AR-type lattice elementary sections. In this filter, the four ARMA-type lattice sections were designed first. As discussed in the previous section, any other algorithms cannot design this filter with this arrangement. The AR and the MA order were 8 and 4. The spectrum and the pole–zero locations of this filter are shown in Fig. 11. This filter is unstable according to the pole–zero locations.

Next, let us consider the following criterion:

$$V'_{s,t} = \sigma_u^2/(2\pi j)\oint \left|\left(B(z^{-1})/A(z^{-1})\right) \hat{A}(z^{-1}) - \hat{B}(z^{-1})\right|^2 dz/z \qquad |z|=1. \quad (41)$$

This criterion is the same as the modified least square criterion introduced by Mullis and Roberts. To calculate the parameters which minimize $V'_{s,t}$, we needed the second-order information and the first-order information (i.e., autocorrelation data and impulse responses of the reference model). In this experiment, after we calculated the 256 points of the impulse response of $B(z^{-1})/A(z^{-1})$, both data were calculated. The estimated ARMA lattice filter was the same as that in Fig. 10. Although the criterion is the same as that of Mullis and Roberts, we could design the ARMA lattice filter with a different ARMA order (i.e., $s=8$ and $t=4$). The spectrum and the pole–zero locations of the designed ARMA lattice filter are shown in Fig. 12. Comparing this filter with the reference model, the spectrum envelope of this estimated filter is quite similar to that of the reference model. In addition, all the poles and zeros lie inside the unit circle (i.e., this filter is stable). Thus, this filter is considered as a fine reduced ARMA model.

Let us show the other example. The criterion is defined as

$$V''_{s,t} = \sigma_u^2/(2\pi j)\oint \left|\hat{A}(z^{-1})/A(z^{-1}) - \hat{B}(z^{-1})/B(z^{-1})\right|^2 dz/z \qquad |z|=1. \quad (42)$$

We needed both the impulse response of $1/A(z^{-1})$ and the impulse response of $1/B(z^{-1})$ to calculate the estimation ARMA parameters. We calculated the 256 points of these impulse responses. The designed ARMA lattice filter was the same as in Fig. 10. The spectrum and the pole–zero locations of this filter are shown in Fig. 13. This spectrum and the pole–zero locations are similar to those of the previous lattice filter. Thus, this filter is also the fine reduced ARMA lattice filter.

Now, let us consider why the estimated lattice filter has different characteristics for different criteria. The ARMA parameters of each filter are estimated to minimize each criterion. The estimation model $\hat{A}(z^{-1})$ and $\hat{B}(z^{-1})$ have to identify the resonances and the antiresonances of the reference model. Thus, in $V_{s,t}$ of (40), $\hat{A}(z^{-1})$ and $\hat{B}(z^{-1})$ have to identify the zero points of $A(z^{-1})$ and $B(z^{-1})$ in the unit circle, respectively. However, even if an estimated zero point is slightly shifted from the given zero point, the value of $V_{s,t}$ is not greatly changed. In other words, the sensitivity of the estimation is poor because the estimation error around the resonances and the antiresonances does not influence the criterion greatly. On the other hand, for $V'_{s,t}$, $\hat{A}(z^{-1})$ and $\hat{B}(z^{-1})$ have to identify the pole points of $A(z^{-1})$ and the zero points of $B(z^{-1})$ in the unit circle. Thus, if an estimated pole point of $\hat{A}(z^{-1})$ is slightly shifted from the given pole point, the value of $V'_{s,t}$ is

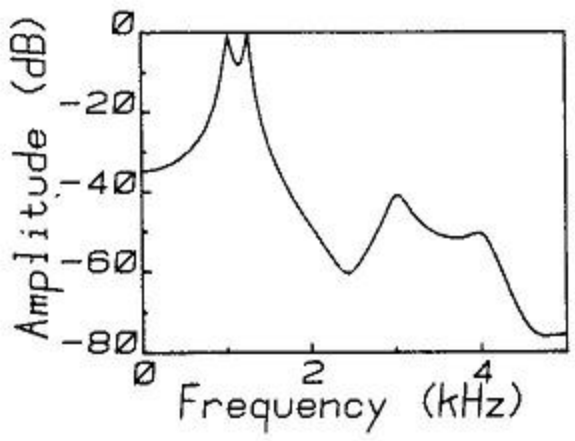

(a)

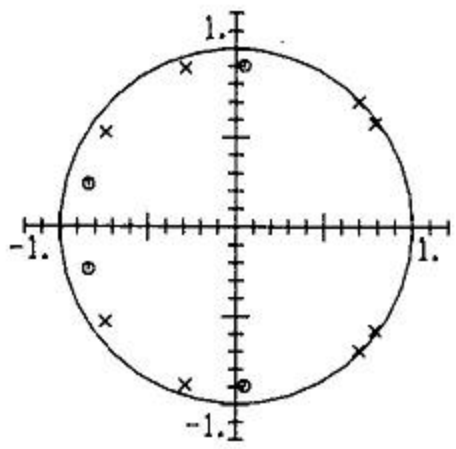

(b)

Fig. 13. (a) Spectrum and (b) pole–zero locations of the designed ARMA lattice filter based on $V''_{s,t}$ of (42).

greatly changed. It shows that the sensitivity of the estimation for $A(z^{-1})$ is quite good. In addition, it is shown that the sensitivity of the estimation for $A(z^{-1})$ and $B(z^{-1})$ is also good concerning $V''_{s,t}$. Thus, we can get the accurate reduced model for $V'_{s,t}$ and $V''_{s,t}$.

VIII. Conclusions

This paper has proposed a new ARMA digital lattice filter. The ARMA digital lattice filter is designed from a new criterion. Since the criterion is defined to identify an ARMA reference model, the designed lattice filter is quite different from the conventional ARMA lattice filters modified from the AR lattice filter.

First, we have derived the fast recursive method, abbreviated FRM, which solves a normal equation for ARMA parameters (i.e., (5)). The calculation cost of this method is proportional to the power of the order of the matrix used in the normal equation. It is less than the calculation cost needed to calculate the inversion of this matrix. Then, we have designed the two elementary sections used in the ARMA lattice filter from FRM. According to these sections, the lattice filter can be built with an arbitrary AR order and an arbitrary MA order.

In order to characterize our proposed filter, we have compared it with the conventional ARMA lattice filters and the conventional FRA's in Section VI. In this section, we have considered the design arrangement and the orthogonal conditions. In contrast to the others, the proposed method can design an ARMA model with any arrangement of the ARMA order update. In addition, every estimation error yielded at each section satisfies orthogonal conditions (i.e., (16)–(18)).

Finally, several experimental results have been shown. The experiment is based on the model reduction problem. These results are obtained from three types of criteria. It has been shown that the estimated filters are different according to these criteria. In addition, if we select the appropriate criterion, it is shown that we can obtain the fine reduced ARMA lattice filter.

Appendix I
Proof of (19) and (20)

Let us derive (19) by using (16). The matrix $\boldsymbol{R}_{s,t}$ and the vector $\boldsymbol{v}_{s,t}(k)$ are given from (6) and (14) as

$$\boldsymbol{R}_{s,t} = E\left[\boldsymbol{h}_{s,t}(k)^T \boldsymbol{h}_{s,t}(k)\right]$$
$$\boldsymbol{v}_{s,t}(k) = \boldsymbol{h}_{s,t}(k)\boldsymbol{\theta}_{s,t}^T. \tag{A1}$$

Using $\boldsymbol{h}_{s,t}(k)$ in (6), (16) is rewritten as

$$E\left[\boldsymbol{v}_{s,t}(k)^T \boldsymbol{h}_{s,t}(k)\right] = \left[\begin{array}{cc|cc} \alpha_1 & \mathbf{0} & \alpha_2 & \mathbf{0} \\ \alpha_3 & \mathbf{0} & \alpha_4 & \mathbf{0} \end{array}\right] \tag{A2}$$

where $\alpha_1 = -E[v^x_{s,t}(k)y(k)]$, $\alpha_2 = E[v^x_{s,t}(k)x(k)]$, $\alpha_3 = E[v^y_{s,t}(k)y(k)]$, and $\alpha_4 = -E[v^y_{s,t}(k)x(k)]$.

Using (16) again, α_1, α_2, α_3, and α_4 in (A2) are given as

$$\alpha_1 = -E\left[v^x_{s,t}(k)y(k)\right] = -E\left[v^x_{s,t}(k)v^y_{s,t}(k)\right] = V^{xy}_{s,t}$$
$$\alpha_2 = E\left[v^x_{s,t}(k)x(k)\right] = E\left[\left(v^x_{s,t}(k)\right)^2\right] = V^x_{s,t}$$
$$\alpha_3 = E\left[v^y_{s,t}(k)y(k)\right] = E\left[\left(v^y_{s,t}(k)\right)^2\right] = V^y_{s,t}$$
$$\alpha_4 = -E\left[v^y_{s,t}(k)x(k)\right] = -E\left[v^y_{s,t}(k)v^x_{s,t}(k)\right] = V^{xy}_{s,t}. \tag{A3}$$

In addition, from (A1), the left-hand side of (A2) is rewritten as

$$E\left[\boldsymbol{v}_{s,t}(k)^T \boldsymbol{h}_{s,t}(k)\right] = E\left[\boldsymbol{\theta}_{s,t}\boldsymbol{h}_{s,t}(k)^T \boldsymbol{h}_{s,t}(k)\right]$$
$$= \boldsymbol{\theta}_{s,t}\boldsymbol{R}_{s,t}. \tag{A4}$$

From (A2)–(A4) we get (19).

Let us next derive (20) by using (17) and (18). From (14), $\gamma_{s,t}(k-1)$ and $\xi_{s,t}(k-1)$ are given as

$$\begin{bmatrix} -\gamma_{s,t}(k-1) \\ \xi_{s,t}(k-1) \end{bmatrix} = \begin{bmatrix} \boldsymbol{\gamma}_{s,t} \\ \boldsymbol{\xi}_{s,t} \end{bmatrix} \boldsymbol{h}_{s,t}(k-1)^T. \tag{A5}$$

Equations (17) and (18) join as

$$E\left[\begin{bmatrix} -\gamma_{s,t}(k-1) \\ \xi_{s,t}(k-1) \end{bmatrix} \boldsymbol{h}_{s,t}(k-1)\right] = \left[\begin{array}{cc|cc} \mathbf{0} & \beta_1 & \mathbf{0} & \beta_2 \\ \mathbf{0} & \beta_3 & \mathbf{0} & \beta_4 \end{array}\right] \tag{A6}$$

where $\beta_1 = -E[\gamma_{s,t}(k-1)y(k-s-1)]$, $\beta_2 = E[\gamma_{s,t}(k-1)x(k-t-1)]$, $\beta_3 = E[\xi_{s,t}(k-1)y(k-s-1)]$, and $\beta_4 = -E[\xi_{s,t}(k-1)x(k-t-1)]$.

Using (17) and (18) again, β_1, β_2, β_3, and β_4 in (A6) are given as

$$\begin{aligned}\beta_1 &= -E[\gamma_{s,t}(k-1)y(k-s-1)]\\ &= -E[\gamma_{s,t}(k-1)\xi_{s,t}(k-1)] = V_{s,t}^{\gamma\xi}\\ \beta_2 &= E[\gamma_{s,t}(k-1)x(k-s-1)]\\ &= E\left[(\gamma_{s,t}(k-1))^2\right] = V_{s,t}^{\gamma}\\ \beta_3 &= E[\xi_{s,t}(k-1)y(k-s-1)]\\ &= E\left[(\xi_{s,t}(k-1))^2\right] = V_{s,t}^{\xi}\\ \beta_4 &= -E[\xi_{s,t}(k-1)x(k-t-1)]\\ &= -E[\xi_{s,t}(k-1)\gamma_{s,t}(k-1)] = V_{s,t}^{\gamma\xi}. \end{aligned} \tag{A7}$$

In addition, using (A1) and (A5), the left-hand side of (A6) is rewritten as

$$\begin{aligned}&E\left[\begin{bmatrix}-\gamma_{s,t}(k-1)\\ \xi_{s,t}(k-1)\end{bmatrix}\boldsymbol{h}_{s,t}(k-1)\right]\\ &= E\left[\begin{bmatrix}\gamma_{s,t}\\ \xi_{s,t}\end{bmatrix}\boldsymbol{h}_{s,t}(k-1)^T\boldsymbol{h}_{s,t}(k-1)\right]\\ &= \begin{bmatrix}\gamma_{s,t}\\ \xi_{s,t}\end{bmatrix}\boldsymbol{R}_{s,t}. \end{aligned} \tag{A8}$$

Thus, we get (20) from (A6)–(A8).

Appendix II
Derivation of (27)–(29)

Let us derive (27). According to (24), $\theta_{s,t}\boldsymbol{I}_1$ is given as

$$\theta_{s,t}\boldsymbol{I}_1 = \left[\begin{array}{ccc|cc}0 & \hat{a}_1^x\cdots\hat{a}_s^x & 0 & 1 & \hat{b}_1^x\cdots\hat{b}_t^x\\ 1 & \hat{a}_1^y\cdots\hat{a}_s^y & 0 & 0 & \hat{b}_1^y\cdots\hat{b}_t^y\end{array}\right]. \tag{A9}$$

Thus, using $\boldsymbol{R}_{s+1,t} = E[\boldsymbol{h}_{s+1,t}(k)^T\boldsymbol{h}_{s+1,t}(k)]$, we get

$$\begin{aligned}\theta_{s,t}\boldsymbol{I}_1\boldsymbol{R}_{s+1,t} &= E\left[\theta_{s,t}\boldsymbol{I}_1\boldsymbol{h}_{s+1,t}(k)^T\boldsymbol{h}_{s+1,t}(k)\right]\\ &= E\left[\boldsymbol{v}_{s,t}(k)^T\boldsymbol{h}_{s+1,t}(k)\right]\\ &= \left[\begin{array}{ccc|cc}V_{s,t}^{xy} & \mathbf{0} & \tau_1 & V_{s,t}^{x} & \mathbf{0}\\ V_{s,t}^{y} & \mathbf{0} & \tau_2 & V_{s,t}^{xy} & \mathbf{0}\end{array}\right] \end{aligned} \tag{A10}$$

where (14) and (A3) are used in (A10), and $\tau_1 = -E[v_{s,t}^x(k)y(k-s-1)]$ and $\tau_2 = E[v_{s,t}^y(k)y(k-s-1)]$. By using (16), the values τ_1 and τ_2 are rewritten as

$$\begin{aligned}[\tau_1 \quad \tau_2] &= E[y(k-s-1)\boldsymbol{v}_{s,t}(k)]\\ &= E[\xi_{s,t}(k-1)\boldsymbol{v}_{s,t}(k)] \end{aligned} \tag{A11}$$

where $\xi_{s,t}(k-1)$ is given from (14) as

$$\begin{aligned}\xi_{s,t}(k-1) &= y(k-s-1) + \hat{a}_s^{\xi}y(k-s)\cdots\\ &\quad + \hat{a}_1^{\xi}y(k-1) - \hat{b}_t^{\xi}x(k-t)\cdots - \hat{b}_1^{\xi}x(k-1).\end{aligned}$$

Thus, from (A10) and (A11) we get (27).

Next, let us derive (28). Using (24), we get

$$\begin{bmatrix}\gamma_{s,t}\boldsymbol{I}_1\\ \xi_{s,t}\boldsymbol{I}_1\end{bmatrix} = \left[\begin{array}{cccc|cc}\hat{a}_0^{\gamma}\cdots\hat{a}_{s-1}^{\gamma} & 0 & 0 & \hat{b}_0^{\gamma}\cdots\hat{b}_{t-1}^{\gamma} & 1\\ \hat{a}_0^{\xi}\cdots\hat{a}_{s-1}^{\xi} & 1 & 0 & \hat{b}_0^{\xi}\cdots\hat{b}_{t-1}^{\xi} & 0\end{array}\right]. \tag{A12}$$

Thus, using $\boldsymbol{R}_{s+1,t} = E[\boldsymbol{h}_{s+1,t}(k)^T\boldsymbol{h}_{s+1,t}(k)]$, we get

$$\begin{aligned}\begin{bmatrix}\gamma_{s,t}\boldsymbol{I}_1\\ \xi_{s,t}\boldsymbol{I}_1\end{bmatrix}\boldsymbol{R}_{s+1,t} &= E\left[\begin{bmatrix}\gamma_{s,t}\boldsymbol{I}_1\boldsymbol{h}_{s+1,t}(k)^T\\ \xi_{s,t}\boldsymbol{I}_1\boldsymbol{h}_{s+1,t}(k)^T\end{bmatrix}\boldsymbol{h}_{s+1,t}(k)\right]\\ &= E\left[\begin{bmatrix}-\gamma_{s,t}(k)\\ \xi_{s,t}(k)\end{bmatrix}\boldsymbol{h}_{s+1,t}(k)\right]\\ &= \left[\begin{array}{ccc|cc}\mathbf{0} & V_{s,t}^{\gamma\xi} & \tau_3 & \mathbf{0} & V_{s,t}^{\gamma}\\ \mathbf{0} & V_{s,t}^{\xi} & \tau_4 & \mathbf{0} & V_{s,t}^{\gamma\xi}\end{array}\right] \end{aligned} \tag{A13}$$

where (14) and (A7) are used in (A13) and $\tau_3 = -E[y(k-s-1)\gamma_{s,t}(k)]$ and $\tau_4 = E[y(k-s-1)\xi_{s,t}(k)]$.

Equation (29) is derived as follows. Using (24), we get

$$\xi_{s,t}\boldsymbol{I}_2 = \left[\begin{array}{cccc|cc}0 & \hat{a}_0^{\xi}\cdots\hat{a}_{s-1}^{\xi} & 1 & 0 & \hat{b}_0^{\xi}\cdots\hat{b}_{t-1}^{\xi}\end{array}\right]. \tag{A14}$$

Thus, $\xi_{s,t}\boldsymbol{I}_2\boldsymbol{R}_{s+1,t}$ is given as

$$\begin{aligned}\xi_{s,t}\boldsymbol{I}_2\boldsymbol{R}_{s+1,t} &= E\left[\xi_{s,t}\boldsymbol{I}_2\boldsymbol{h}_{s+1,t}(k)^T\boldsymbol{h}_{s+1,t}(k)\right]\\ &= E[\xi_{s,t}(k-1)\boldsymbol{h}_{s+1,t}(k)]\\ &= \left[\begin{array}{ccc|cc}\tau_5 & \mathbf{0} & V_{s,t}^{\xi} & \tau_6 & \mathbf{0}\end{array}\right] \end{aligned} \tag{A15}$$

where τ_5 and τ_6 are calculated as

$$\begin{aligned}\tau_5 &= E[\xi_{s,t}(k-1)y(k)] = E[\xi_{s,t}(k-1)v_{s,t}^y] = \tau_2\\ \tau_6 &= -E[\xi_{s,t}(k-1)x(k)]\\ &= -E[\xi_{s,t}(k-1)v_{s,t}^x(k)] = \tau_1. \end{aligned} \tag{A16}$$

Equation (A16) employs (18). From (A15) and (A16), we get (29).

Appendix III
Derivation of (31)–(33)

The recursions of $\theta_{s+1,t}$ and $\gamma_{s+1,t}$ are easily derived as follows. From (27) and (29), consider

$$\begin{aligned}&\left[\theta_{s,t}\boldsymbol{I}_1 + \mu_1^T\xi_{s,t}\boldsymbol{I}_2\right]\boldsymbol{R}_{s+1,t}\\ &= \left[\begin{array}{ccc|cc}V_{s,t}^{xy}+\mu_1^x\tau_2 & \mathbf{0} & \tau_1+\mu_1^xV_{s,t}^{\xi} & V_{s,t}^{x}+\mu_1^x\tau_1 & \mathbf{0}\\ V_{s,t}^{y}+\mu_1^y\tau_2 & \mathbf{0} & \tau_2+\mu_1^yV_{s,t}^{\xi} & V_{s,t}^{xy}+\mu_1^y\tau_1 & \mathbf{0}\end{array}\right] \end{aligned} \tag{A17}$$

where $\mu_1 = [\mu_1^x\mu_1^y]$. If $\mu_1 = -(V_{s,t}^{\xi})^{-1}[\tau_1 \quad \tau_2]$, then the $(s+2)$th elements in the first and second rows of the right-hand side become zero (i.e., $\tau_1 + \mu_1^xV_{s,t}^{\xi} = \tau_2 + \mu_1^yV_{s,t}^{\xi} = 0$). Thus, comparing (A17) with (30), we get

$$\theta_{s+1,t} = \theta_{s,t}\boldsymbol{I}_1 + \mu_1^T\xi_{s,t}\boldsymbol{I}_2 \tag{A18}$$

$$\begin{aligned}\mu_1 &= -\left(V_{s,t}^{\xi}\right)^{-1}[\tau_1 \quad \tau_2]\\ \boldsymbol{V}_{s+1,t} &= \begin{bmatrix}V_{s+1,t}^{x} & V_{s+1,t}^{xy}\\ V_{s+1,t}^{xy} & V_{s+1,t}^{y}\end{bmatrix}\\ &= \begin{bmatrix}V_{s,t}^{x} & V_{s,t}^{xy}\\ V_{s,t}^{xy} & V_{s,t}^{y}\end{bmatrix} + \begin{bmatrix}\mu_1^x\tau_1 & \mu_1^x\tau_2\\ \mu_1^y\tau_1 & \mu_1^y\tau_2\end{bmatrix}\\ &= \boldsymbol{V}_{s,t} + \mu_1^T[\tau_1 \quad \tau_2]. \end{aligned} \tag{A19}$$

Note that the (1,1)th, $(1, s+3)$th, (2,1)th and $(2, s+3)$th elements of the right-hand side in (A18) must be 0, 1, 1, and 0, respectively, since the elements of $\theta_{s+1,t}$ associated with their positions are 0, 1, 1, and 0, respectively.

Next, consider the following equation:

$$[\gamma_{s,t}+\mu_2\xi_{s,t}]\boldsymbol{I}_1\boldsymbol{R}_{s+1,t} = \left[\mathbf{0} \quad V_{s,t}^{\gamma\xi}+\mu_2 V_{s,t}^{\xi} \quad \tau_3+\mu_2\tau_4 \;\vdots\; \mathbf{0} \quad V_{s,t}^{\gamma}+\mu_2 V_{s,t}^{\gamma\xi}\right]. \tag{A20}$$

Equation (A20) is derived from (28). Thus, if $\mu_2 = -V_{s,t}^{\gamma\xi}/V_{s,t}^{\xi}$, then the $(s+1)$th element of the right-hand side becomes zero. From (A20) and (30), we get

$$\gamma_{s+1,t} = [\gamma_{s,t}+\mu_2\xi_{s,t}]\boldsymbol{I}_1 \tag{A21}$$

$$\begin{aligned} \mu_2 &= -V_{s,t}^{\gamma\xi}/V_{s,t}^{\xi} \\ V_{s+1,t}^{\gamma\xi} &= \tau_3+\mu_2\tau_4 \\ V_{s+1,t}^{\gamma} &= V_{s,t}^{\gamma}+\mu_2 V_{s,t}^{\gamma\xi}. \end{aligned} \tag{A22}$$

Note that the $(s+2)$th and $(s+t+3)$th elements of the right-hand side in (A21) must be 0 and 1 since the elements of $\gamma_{s+1,t}$ associated with their positions are 0 and 1, respectively.

Finally, let us derive the recursion of $\xi_{s+1,t}$. We have to notice that the $(s+2)$th and $(s+t+3)$th elements of $\xi_{s+1,t}$ are 1 and 0, respectively. First, consider the following equation:

$$\begin{aligned} \mu_3\theta_{s,t}\boldsymbol{I}_1\boldsymbol{R}_{s+1,t} &= -[\tau_1 \quad \tau_2]V_{s,t}^{-1}\left[\begin{array}{ccc|cc} V_{s,t}^{xy} & \mathbf{0} & \tau_1 & V_{s,t}^{x} & \mathbf{0} \\ V_{s,t}^{y} & \mathbf{0} & \tau_2 & V_{s,t}^{xy} & \mathbf{0} \end{array}\right] \\ &= [-\tau_2 \quad \mathbf{0} \quad \lambda \;\vdots\; -\tau_1 \quad \mathbf{0}] \end{aligned} \tag{A23}$$

where (27) is used in (A23) and

$$\begin{aligned} \mu_3 &= -[\tau_1 \quad \tau_2]V_{s,t}^{-1} \\ \lambda &= [\tau_1 \quad \tau_2]\mu_3^T. \end{aligned} \tag{A24}$$

Thus, from (29) and (A23), we get

$$(\xi_{s,t}\boldsymbol{I}_2+\mu_3\theta_{s,t}\boldsymbol{I}_1)\boldsymbol{R}_{s+1,t} = \left[\mathbf{0} \quad V_{s,t}^{\xi}+\lambda \;\vdots\; \mathbf{0} \quad 0\right]. \tag{A25}$$

However, from (A9) and (A14), the vector $\xi_{s,t}\boldsymbol{I}_2+\mu_3\theta_{s,t}\boldsymbol{I}_1$ is

$$\begin{aligned} &[0 \quad \hat{a}_0^{\xi}\cdots\hat{a}_{s-1}^{\xi} \quad 1 \;\vdots\; 0 \quad \hat{b}_0^{\xi}\cdots\hat{b}_{t-1}^{\xi}] \\ &\quad +\mu_3\left[\begin{array}{cccc|cc} 0 & \hat{a}_1^{x}\cdots\hat{a}_s^{x} & & 0 & 1 & \hat{b}_1^{x}\cdots\hat{b}_t^{x} \\ 1 & \hat{a}_1^{y}\cdots\hat{a}_s^{y} & & 0 & 0 & \hat{b}_1^{y}\cdots\hat{b}_t^{y} \end{array}\right]. \end{aligned} \tag{A26}$$

In (A26), the $(s+t+3)$th element (i.e., the rightmost element) does not become zero. Thus, we have to make it zero in order to obtain $\xi_{s+1,t}$. Let us consider the following equation:

$$(\xi_{s+1,t}-\mu_4\gamma_{s+1,t})\boldsymbol{R}_{s+1,t} = \left[\mathbf{0} \quad V_{s+1,t}^{\xi}-\mu_4 V_{s+1,t}^{\gamma\xi} \;\vdots\; \mathbf{0} \quad 0\right] \tag{A27}$$

where $\mu_4 = V_{s+1,t}^{\gamma\xi}/V_{s+1,t}^{\gamma}$. Equation (A27) is derived from (30). Thus, comparing (A27) with (A25), we get

$$\xi_{s+1,t}-\mu_4\gamma_{s+1,t} = \xi_{s,t}\boldsymbol{I}_2+\mu_3\theta_{s,t}\boldsymbol{I}_1. \tag{A28}$$

From (A21), (A24), (A27), and (A28), we finally obtain

$$\xi_{s+1,t} = \xi_{s,t}\boldsymbol{I}_2+[\mu_3\theta_{s,t}+\mu_4\gamma_{s,t}+\mu_5\xi_{s,t}]\boldsymbol{I}_1 \tag{A29}$$

$$\begin{aligned} \mu_3 &= -[\tau_1\tau_2]V_{s,t}^{-1} \\ \mu_4 &= V_{s+1,t}^{\gamma\xi}/V_{s+1,t}^{\gamma} = (\tau_3+\mu_2\tau_4)/(V_{s,t}^{\gamma}+\mu_2 V_{s,t}^{\gamma\xi}) \\ &= \left(V_{s,t}^{\gamma\xi}\tau_4 - V_{s,t}^{\xi}\tau_3\right)\Big/\left[\left(V_{s,t}^{\gamma\xi}\right)^2 - V_{s,t}^{\gamma}V_{s,t}^{\xi}\right] \\ \mu_5 &= \mu_4\mu_2 \end{aligned} \tag{A30}$$

$$\begin{aligned} V_{s+1,t}^{\xi} &= V_{s,t}^{\xi}+\lambda+\mu_4 V_{s+1,t}^{\gamma\xi} \\ &= V_{s,t}^{\xi}+[\tau_1\tau_2]\mu_3^T+\mu_4\tau_3+\mu_5\tau_4. \end{aligned} \tag{A31}$$

From (A18), (A21), and (A29), the AR-type recursive formula is derived.

Appendix IV
Derivation of (37) and (38)

First, let us derive (37). From (24), $\boldsymbol{I}_1$ and $\boldsymbol{I}_2$ are rewritten by a new vector $\bar{\boldsymbol{e}}_i$ as

$$\begin{aligned} \boldsymbol{I}_1^T &= [\bar{\boldsymbol{e}}_1^T\cdots\bar{\boldsymbol{e}}_{s+1}^T \;\vdots\; \bar{\boldsymbol{e}}_{s+3}^T\cdots\bar{\boldsymbol{e}}_{s+t+3}^T] \\ \boldsymbol{I}_2^T &= [\bar{\boldsymbol{e}}_2^T\cdots\bar{\boldsymbol{e}}_{s+2}^T \;\vdots\; \bar{\boldsymbol{e}}_{s+4}^T\cdots\bar{\boldsymbol{e}}_{s+t+3}^T \quad \mathbf{0}^T] \end{aligned} \tag{A32}$$

where $\bar{\boldsymbol{e}}_i$ is the $(s+t+3)$ dimensional row vector which has 1 at the ith element and zero at the others. Thus, we get

$$\begin{aligned} \boldsymbol{h}_{s+1,t}(k)\boldsymbol{I}_1^T &= [y(k)\cdots y(k-s-1) \;\vdots\; x(k)\cdots x(k-t)]\boldsymbol{I}_1^T \\ &= [y(k)\cdots y(k-s) \;\vdots\; x(k)\cdots x(k-t)] \end{aligned} \tag{A33}$$

$$\begin{aligned} \boldsymbol{h}_{s+1,t}(k)\boldsymbol{I}_2^T &= [y(k)\cdots y(k-s-1) \;\vdots\; x(k)\cdots x(k-t)]\boldsymbol{I}_2^T \\ &= [y(k-1)\cdots y(k-s-1) \;\vdots\; x(k-1)\cdots x(k-t) \quad 0]. \end{aligned} \tag{A34}$$

From (A33) and (A34), (37) is obtained.

Let us derive (38) next. From (14) and (31), we get

$$\begin{aligned} \boldsymbol{v}_{s+1,t}(k) &= \boldsymbol{h}_{s+1,t}(k)\theta_{s+1,t}^T \\ &= \boldsymbol{h}_{s+1,t}(k)[\boldsymbol{I}_1^T\theta_{s,t}^T+\boldsymbol{I}_2^T\xi_{s,t}^T\mu_1] \\ &= \boldsymbol{v}_{s,t}(k)+\xi_{s,t}(k-1)\mu_1. \end{aligned} \tag{A35}$$

From (14) and (31), the other errors $\gamma_{s+1,t}(k)$ and $\xi_{s+1,t}(k)$ are given as follows:

$$\begin{aligned} \gamma_{s+1,t}(k) &= -\boldsymbol{h}_{s+1,t}(k)\gamma_{s+1,t}^T \\ &= -\boldsymbol{h}_{s+1,t}(k)\boldsymbol{I}_1^T[\gamma_{s,t}^T+\mu_2\xi_{s,t}^T] \\ &= \gamma_{s,t}(k)-\mu_2\xi_{s,t}(k) \end{aligned} \tag{A36}$$

$$\begin{aligned} \xi_{s+1,t}(k) &= \boldsymbol{h}_{s+1,t}(k)\xi_{s+1,t}^T \\ &= \boldsymbol{h}_{s+1,t}(k)\boldsymbol{I}_2^T\xi_{s,t}^T+\boldsymbol{h}_{s+1,t}(k)\boldsymbol{I}_1^T \\ &\quad\cdot[\theta_{s,t}^T\mu_3^T+\mu_4\gamma_{s,t}^T+\mu_5\xi_{s,t}^T] \\ &= \xi_{s,t}(k-1)+\boldsymbol{v}_{s,t}(k)\mu_3^T-\mu_4\gamma_{s,t}(k)+\mu_5\xi_{s,t}(k) \\ &= \xi_{s,t}(k-1)+\boldsymbol{v}_{s,t}(k)\mu_3^T-\mu_4\gamma_{s+1,t}(k) \end{aligned} \tag{A37}$$

where (A37) uses (A36) and $\mu_5 = \mu_4 \mu_2$. From (A35)–(A37), (38) is obtained.

Acknowledgment

The authors express their appreciation to Prof. K. Hatori of Hokkaido University, Sapporo, for his useful advice.

References

[1] B. Friedlander, "Lattice methods for spectral estimation," *Proc. IEEE*, vol. 70, Sept. 1982.

[2] S. Haykin, *Nonlinear Methods of Spectral Analysis* (Topics in Applied Physics). New York: Springer-Verlag, 1979.

[3] Y. Miyanaga, N. Miki, N. Nagai, and K. Hatori, "A speech analysis algorithm which eliminates the influence of pitch using the model reference adaptive system," *IEEE Trans. Acoust., Speech, Signal Process.*, vol. ASSP-30, no. 1, pp. 88–96, Feb. 1982.

[4] J. D. Markel, and A. H. Gray, *Linear Prediction of Speech*. New York: Springer-Verlag, 1976.

[5] D. T. L. Lee, M. Morf, and B. Friedlander, "Recursive least square ladder estimation algorithms," *IEEE Trans. Acoust., Speech, Signal Process.*, vol. ASSP-29, no. 3, pp. 627–641, June 1981.

[6] Y. Miyanaga, N. Miki, and N. Nagai, "ARMA digital lattice filter based on a linear prediction theory," *Trans. IECE Japan*, vol. J67-A, no. 5, pp. 487–494, May 1984.

[7] C. T. Mullis, and R. A. Roberts, "The use of second-order information in the approximation of discrete-time linear systems," *IEEE Trans. Acoust., Speech, Signal Process.*, vol. ASSP-24, no. 3, pp. 226–238, June 1976.

[8] Y. Miyanaga, H. Watanabe, N. Miki, and N. Nagai, "A fast calculation algorithm for a parameter estimation of autoregressive and moving-average model," Trans. IECE *Japan*, vol. J66-a, no. 10, pp. 1000–1007, Oct. 1983.

[9] V. Krishnamurthy, and V. Seshadri, "Model reduction using the Routh stability criterion," *IEEE Trans. Automat. Contr.*, vol. AC-23, no. 4, pp. 729–731, Aug. 1978.

[10] R. A. El-attar, and M. Vidyasagar, "Order reduction by l_1 and l-norm minimization," *IEEE Trans. Automat. Contr.*, vol. AC-23, no. 4, pp. 731–734, Aug. 1978.

[11] A. Benveniste, and C. Chaure, "AR and ARMA identification algorithms of Levinson type: An innovations approach," *IEEE Trans. Automat. Contr.*, vol. AC-26, no. 6, pp. 1243–1261, Dec. 1981.

[12] Y. Monden, M. Yamada, and S. Arimoto, "Fast algorithm for identification of an ARX model and its order determination," *IEEE Trans. Acoust., Speech, Signal Process.*, vol. ASSP-30, no. 3, pp. 390–399, June 1982.

[13] H. Lev-Ari, T. Kailath, and J. Cioffi, "Least-squares adaptive lattice and transversal filters: A unified geometric theory," *IEEE Trans. Inform. Theory*, vol. IT-30, no. 2, pp. 222–236, Mar. 1984.

[14] Y. Miyanaga, N. Miki, and N. Nagai, "An optimum estimation of autoregressive and moving-average parameters in a short time," *Trans. IECE Japan*, vol. J66-A, no. 1, pp. 1–8, Jan. 1983.

Yoshikazu Miyanaga (S'80–M'85) was born in Sapporo, Japan, on December 20, 1956. He received the B.S., M.S., and Dr.Eng. degrees from Hokkaido University, Sapporo, Japan, in 1979, 1981, and 1986, respectively.

He studied at the University of Illinois, Urbana-Champaign, as a Visiting Research Associate, from August 1984 to August 1985. He is currently an Assistant Professor with the Department of Electronic Engineering, Faculty of Engineering, Hokkaido University. His research interests are digital signal processing, computer software, and speech analysis.

Dr. Miyanaga is a member of the Institute of Electronics and Communication Engineers of Japan.

Nobuo Nagai (M'74) was born in Tokyo, Japan, on January 5, 1938. He received the B.S. and Dr. Eng. degrees from Hokkaido University, Sapporo, Japan, in 1961 and 1971, respectively.

He is currently a Professor at the Research Institute of Applied Electricity, Hokkaido University. He was with Cornell University, Ithaca, NY, as a Visiting Research Associate in 1972. Presently, he is engaged in research on distributed networks.

Dr. Nagai is a member of the Institute of Electronics and Communication Engineers of Japan.

Nobuhiro Miki (S'68–M'74) was born in Kawaguchi, Japan, on October 14, 1945. He received the B.Eng. degree from Tokyo Denki University, Tokyo, Japan, in 1968, and the M.S. and Ph.D. degrees in electronics from Hokkaido University, Sapporo, Japan, in 1970 and 1974, respectively.

From 1974 to 1975, he was a Research Associate at the Simulation Center, Hokkaido University. From 1975 to 1980, he was a Research Associate, and since 1980 he has been an Associate Professor at the Research Institute of Applied Electricity, Hokkaido University. He is engaged in research on digital processing of speech signals and time domain analysis of systems.

Dr. Miki is a member of the Institute of Electronics and Communication Engineers of Japan.