Dynamics of photoelectrons and structural changes of tungsten trioxide observed by femtosecond transient XAFS

Yohei Uemura[a], Daiki Kido[b], Yuki Wakisaka[a,c], Hiromitsu Uehara[b], Tadashi Ohba[b], Yasuhiro Niwa[d], Shunsuke Nozawa[d], Tokushi Sato[d], Kohei Ichiyanagi[d], Ryo Fukaya[d], Shin-ichi Adachi[d], Tetsuo Katayama[e], Tadashi Togashi[e], Sigeki Owada[f], Kanade Ogawa[f], Makina Yabashi[f], Keisuke Hatada[g], Satoru Takakusagi[b], Toshihiko Yokoyama[a], Bunsho Ohtani[b], Kiyotaka Asakura[b]*

Dedication ((optional))

Abstract: The dynamics of the local electronic and geometric structures of WO_3 following photoexcitation were studied by femtosecond time-resolved X-ray absorption fine structure (XAFS) spectroscopy using an X-ray free electron laser (XFEL). We found that the electronic state was the first to change followed by the local structure, which was affected within 200 ps of photoexcitation.

The utilization of solar energy is one of the most fascinating and important research subjects with regard to obtaining a society less dependent on fossil fuels. For this reason, photocatalysts and photoelectrodes[1] have been developed over the last several decades in order to produce hydrogen from water without the generation of harmful pollutants. More recently, tungsten trioxide (WO_3) has received much attention, since its band gap is 2.6 to 2.8 eV,[3] meaning that it functions as an active photocatalyst under visible light irradiation. WO_3 has shown the potential to allow the complete decomposition of water to hydrogen (H_2) and oxygen (O_2) when used in combination with TaON in the so-called Z-scheme photocatalyst system.[4]

Various fundamental photocatalytic properties of WO_3 have been studied by both theoretical and experimental methods. The main goal of such work has been to determine where photocarriers are created and how and when they are consumed. Density functional theory (DFT) calculations concerning the ground state[5] have shown that the valence band of WO_3 is primarily composed of O 2p orbitals and that the conduction band consists of W 5d orbitals. Electrons in the valence band are excited to the conduction band to create photocarriers (electrons and holes) by photoabsorption. These DFT results have thus provided insight into the nature of such photocarriers. The lifetimes of photocarriers in WO_3 have been studied using spectroscopic techniques with different time scales.[6] Amano et al.[6a] observed long-living photocarriers having lifetimes longer than 100 μs in WO_3 microparticles and claimed that these photocarriers such as these could contribute to the activity of the oxide for the water splitting reaction. Pesici et al.[6b] reported that more than 90% of electron-hole pairs recombined within 10 μs. Bedja et al. also observed the fast trapping of photoelectrons (within 1 ns) in colloidal WO_3. [6c]

Although previous fundamental studies have generated significant information with regard to photocarriers in WO_3, there have been no studies addressing the local electronic and geometric structure changes around W, especially in the case of photoexcited WO_3, even though such data are vital to understanding and improving the photocatalytic performance of this material. Recently,[7] we successfully observed the excited state around W in WO_3 100 ps after laser excitation, using a pump-probe X-ray absorption fine structure (XAFS) method employing a PF-AR (a single bunch operation storage ring with a time resolution of 100 ps).[7-8] Pump-probe XAFS is an element-specific, time-

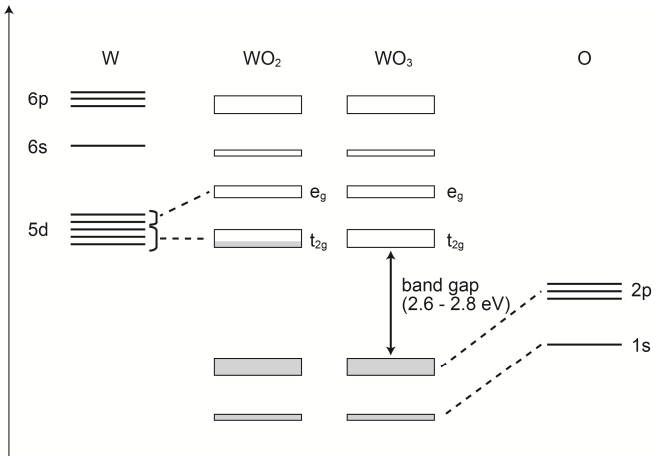

Fig. 1 a schematic diagram of band structures of WO_2 and WO_3. [2]

[a] Yohei Uemura, Toshihiko Yokoyama, Yuki Wakisaka
Institute for Molecular Science, Myodaiji-cho, Okazaki 444-8585, Japan
[b] Daiki Kido, Hiromitsu Uehara, Tadashi Ohba, Satoru Takakusaki, Bunsho Ohtani, Kiyotaka Asakura
Institute for Catalysis Hokkaido University, Sapporo 001-0021, Japan
[c] Yuki Wakisaka
Graduate School of Science, Nagoya University, Nagoya, Japan
[d] Yasuhiro Niwa, Shunsuke Nozawa, Tokushi Sato, Kohei Ichiyanagi, Ryo Fukaya, Shin-ichi Adachi
PF, IMSS, KEK, Tsukuba 305-0801, Japan
[e] Tetsuo Katayama, Tadashi Togashi
JASRI, Kouto, Sayo-cho, Hyogo 679-5198, Japan
[f] Sigeki Owada, Kanade Ogawa. Makina Yabashi
RIKEN SPring-8 Center, Kouto, Sayo-cho, Hyogo 679-5148, Japan
[g] Keisuke Hatada
Institut de Physique de Rennes, ,Université de Rennes1, 263 Av. du Général Leclerc 35042 Rennes cedex – France

resolved technique capable of selectively detecting the local electronic state around X-ray absorbing atoms.[7] Following a 400 nm laser pulse excitation, the W L_{III}-edge XAFS white

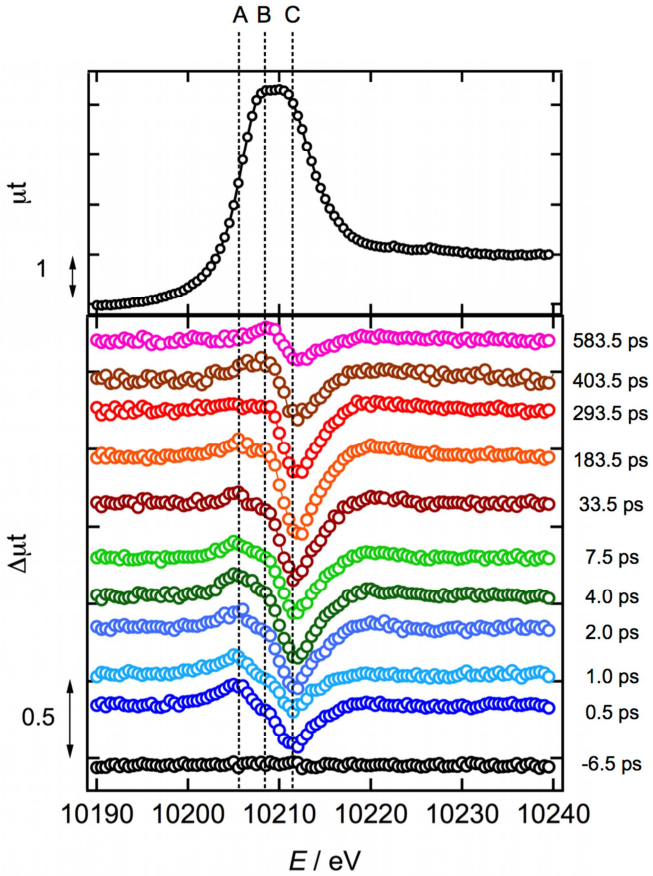

Fig. 2 W L_{III} XANES spectra of WO_3 in the ground state and difference XANES spectra of WO_3. Each difference spectrum is the subtraction of the XANES spectrum of an excited state and the spectrum of a ground state. The time differences between X-rays and laser pulses are placed beside each spectrum.

line peak dramatically decreases, directly indicating that the excited electrons occupy W e_g orbitals in the higher energy state. However, this interpretation has a crucial problem in that the photon energy of the excitation laser (3 eV) is much lower than energy difference (> 6eV) between the valence band composed of O orbitals and the conduction band associated with the e_g (upper level) d state. Therefore direct photoexcitation to the upper level should be impossible in response to a single shot laser pulse. As such, the phenomenon we observed was instead a secondary process, indicating that a faster pump-probe XAFS experiment with a time resolution less than 100 ps was necessary. In the present work, we performed femtosecond (fs) pump-probe XAFS experiments with an X-ray free electron laser (XFEL) using the SPring-8 Angstrom Compact Free Electron Laser (SACLA), which provides X-ray pulses of less than 10 fs.[9] On the basis of this work, we have found new features in the photoabsorption process and herein we present new interpretations.

The experiments were carried out at the EH2 unit of BL3 at SACLA. Si(111) double crystals were used to monochromatize X-ray pulses and a chirped-pulse amplified laser was employed to excite the WO_3 sample. The pulse duration and wavelength of the excitation laser were 70 fs and 400 nm, respectively, while the fluence was approximately 520 mJ/cm^2. All the XAFS spectra were acquired in the fluorescence mode. A Kapton film was used to scatter the X-ray pulses so as to allow measurement of the incident X-ray intensity by the two photodiodes. Fluorescence X-rays emitted from the sample were also measured by a photodiode. A beryllium thin film was placed in front of the photodiode to avoid detection of scattered light from the excitation laser. The sample was a suspension of WO_3 nanoparticles in which the concentration of WO_3 was 4 mM. A continuous flow of the suspension was provided by a magnetic gear pump to prevent the sample from precipitating. The overall time resolution of the pump-probe XAFS at SACLA was 500 fs due to a time jitter.

Figure 2 shows the W L_{III} XANES spectrum (upper) in the ground state and the difference spectra between the XANES spectra of WO_3 in the ground and excited states. Compared to previous pump-probe experiments, the S/N ratios were tremendously improved when using the strong XFEL pulse. Three distinct peaks are evident in the difference spectrum in Fig. 2, denoted as A, B and C. In our previous work using synchrotron radiation, we were able to identify only peak C, at 10,211 eV.

Peak A at approximately 10,206 eV appeared 0.5 ps (500 fs) after the excitation and was positioned just at the edge. Peak A maintained an almost constant intensity for 200 ps and then gradually decreased, as shown in Fig. 3A. Peak B appeared at 10,208 eV, and the transient behaviour of this peak below 200 ps was quite complicated due to the effects of the two larger peaks A and C, as can be seen in Fig. 3B. The negative peak C at 10,211 eV grew rapidly and then increased more gradually up to 200 ps, followed by a decrease in its absolute intensity. The time evolution of peak C could be fitted with the sequential first order equation α*exp($-k_1t$) + β*exp($-k_2t$) + γ, as shown in the figure. From the data, we estimated k_1 and k_2 to be 0.007(1) and 0.00056(5) ps^{-1}, respectively (time constant τ_1(=1/k_1) = 140 ± 20 ps, τ_2(=1/k_2) = 1800 ± 200 ps). This k_2 value is consistent with the rate constant estimated in our previous experimental work. [7] The decays of peaks A and B after 200 ps could be fitted with a single exponential, giving the same k value of 0.00056 ps^{-1}, as shown in Fig. 3. All three peaks may therefore represent the same decay process. The broad feature in the ground state spectrum of WO_3 appearing in the vicinity of 10,200 to 10,220 eV in Fig. 2 is termed the "white line," and corresponds to the transition from the $2p_{3/2}$ state to the empty 5d state. In case of WO_3, all the d states are assumed to be empty, since a strong white line peak appears. In our previous paper, we

assigned peak C to the e_g state. Figure S1 presents XANES spectra for the standard compounds WO_3 and WO_2. The white line peak is seen to shift to higher energy values and to increase in intensity in conjunction with the higher oxidation state. Figure S2 shows the first and second derivatives of the raw data obtained from WO_3. The first derivative generates one positive peak and one negative peak that exhibit peak shapes and separation similar to those of the difference spectrum obtained at 0.5 ps. The pump laser evidently induced an electron transfer from O to W, resulting in the reduction of W(VI) to W(V) and prompting the edge shift to the lower energy side. The simple edge shift gives the positive peak at the lower energy side and negative peak at the higher energy side in the difference spectra. Assuming that no d state receives an electron, the peak shape may be approximated by the first derivative as in the equation $\Delta\mu t = d\mu t/dE \times \Delta E$. ΔE was estimated to be 0.4 eV based on the shift of the negative first derivative peak derived from peak C. Figure S3 presents a plot of the equation $d\mu t/dE \times \Delta E(= 0.4\ \mathrm{eV})$ in which peak C and the negative peak of the first derivative appear in the vicinity of 10,212 eV and are close to one another. Peak A was much smaller than the positive peak obtained from the first derivative because of the filling of d vacancies by the excited electrons generated via the laser. We thus conclude that peaks A and C result from the energy shift of the white line. Our previous interpretation of peak C, that the photoexcited electron occupies the e_g state in the higher energy d state, should therefore be corrected.[7] Our new interpretation of the peak changes agrees with the general understanding that photoabsorption excites the valence electron primarily associated with the O 2p orbital to the bottom of the conduction band composed of the W 5d orbitals. The XAFS spectra in the excited state are shifted to lower energies due to emergence of W^{5+}. As a result, peaks A and C appear in the difference spectra. The W^{5+} state appears to be present for several picoseconds after excitation, judging from the total 5d line peak intensity change shown in Fig. S5. However, the absolute value of the peak C intensity further increased over time, while peak A maintained a constant intensity up to 200 ps. At the same time, peak B also increased. These gradual changes may arise from the local structural transformations that occur along with variations in the electronic structure. The theoretically calculated XANES spectra of the ground state WO_3 having monoclinic (room temperature form) and orthorhombic (high temperature form) structures were generated using full potential multiple scattering (FPMS) [10] to generate difference spectra. The higher energy region of the white line of the orthorhombic form is weaker in the vicinity of peak C compared to that of the monoclinic (ground state) form, as shown in Fig. S4. We therefore suggest that the local structure transitions to an orthorhombic-like structure up to 200 ps. After 200 ps, the orthorhombic-like local structure gradually returns to the original monoclinic structure.

A proposed summary of the overall changes is shown in Fig. 4. The first process occurs immediately after photoexcitation; once WO_3 is irradiated by the excitation laser, the electrons in the valence band (primarily the O 2p

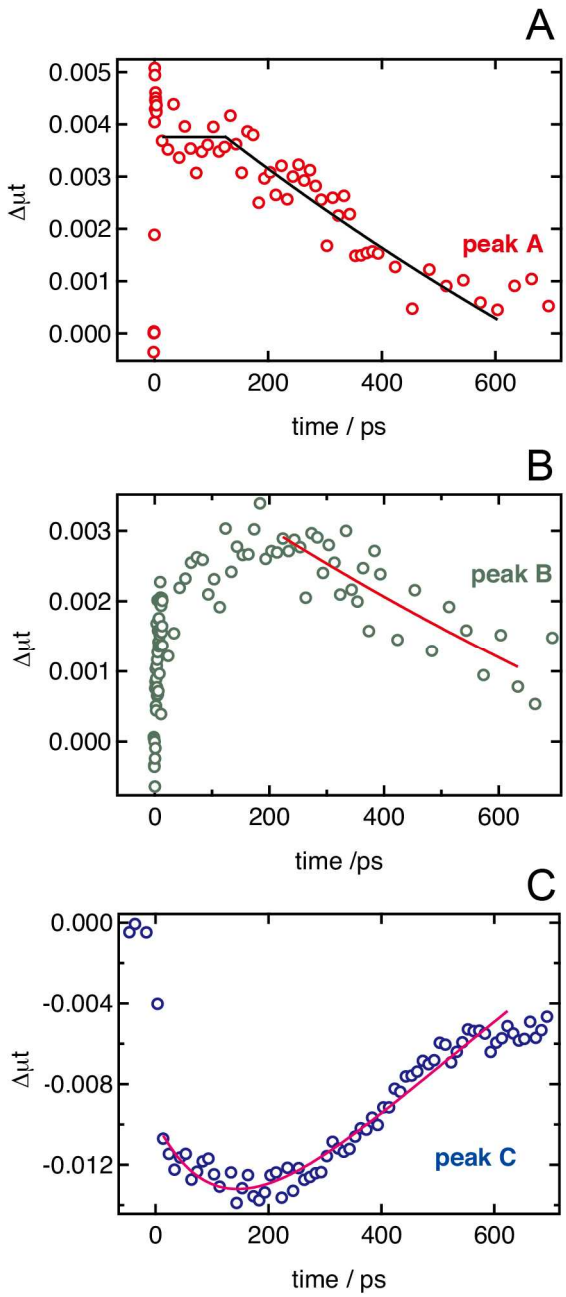

Fig. 3 Changes in absorption intensities of W LIII XANES peaks A, B and C (as shown in Fig. 2) with time.

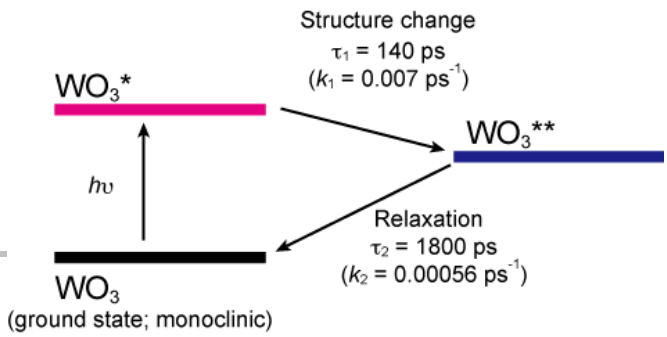

Fig. 4 A proposed scheme for the photoexcitation process of WO_3.

orbital) are excited to the conduction band composed of W 5d orbitals. This state is denoted as WO_3*. On average, the W was reduced to the 5.3 ± 0.3 state judging from the edge shifts or white line area changes in Figs. S5-7. The WO_3* subsequently changes its structure to that of the second excited state (WO_3**), which has less density of state at the energy levels around peak C. Since the W-O vibrational frequency is approximately 10-20 ps^{-1} based on IR data (that is, ranges over 600-1200 cm^{-1}), this structural transformation can take place within 200 ps.

This work has shown that fs pump-probe XAFS using XFEL provides a new means of understanding the local electronic and geometric structures around a central transition element. We are now conducting pump-probe EXAFS studies applying a wider energy range to confirm the structure change.

Acknowledgements

This work was financially supported by a Grant-in-Aid for Exploratory Research (No. 26620110) and by a Grant-in-Aid for Scientific Research (A) (No. 15H02173) from JSPS and fuel cell project from NEDO. K. H. acknowledges a grant of the European FP7 MS-BEEM (Grant Agreement No. PIEF-GA-2013-625388) and partial funding of FP7 MSNano network (Grant Agreement No. PIRSES-GA-2012-317554), and COST Action MP1306 EUSpec.The authors would like to express their thanks to Mr. Yuki Yoshimoto and Prof. Peter Krüger of Chiba University for fruitful discussions and technical support with regard to XANES calculations, and to Dr. Hiroyuki Asakura of Nagoya University for providing some of the W L_{III} XANES data.

Keywords: Photocatalysts, X-ray Free Electron Laser (XFEL), XAFS, Ultrafast spectroscopy

References

[1] [a]T. Hisatomi, J. Kubota, K. Domen, *Chem. Soc. Rev.* **2014**, *43*, 7520-7535; [b]F. E. Osterloh, *Chem. Soc. Rev.* **2013**, *42*, 2294-2320; [c]B. Ohtani, *Catalysts* **2013**, *3*, 942-953; [d]Y. Tachibana, L. Vayssieres, J. R. Durrant, *Nat. Photonics* **2012**, *6*, 511-518; [e]P. V. Kamat, *J. Phys. Chem. Lett.* **2012**, *3*, 663-672; [f]K. Maeda, *J. Photochem. Photobiol., C* **2011**, *12*, 237-268; [g]K. Maeda, K. Domen, *J. Phys. Chem. Lett.* **2010**, *1*, 2655-2661; [h]R. Abe, *J. Photochem. Photobiol., C* **2010**, *11*, 179-209; [i]A. Kudo, Y. Miseki, *Chem. Soc. Rev.* **2009**, *38*, 253-278.

[2] G. A. Niklasson, C. G. Granqvist, *J. Mater. Chem.* **2007**, *17*, 127-156.

[3] [a]C. G. Granqvist, *Solar Energy Materials and Solar Cells* **2000**, *60*, 201-262; [b]G. R. Bamwenda, K. Sayama, H. Arakawa, *J. Photochem. Photobiol., A* **1999**, *122*, 175-183.

[4] [a]R. Abe, H. Takami, N. Murakami, B. Ohtani, *J. Am. Chem. Soc.* **2008**, *130*, 7780-7781; [b]R. Abe, T. Takata, H. Sugihara, K. Domen, *Chem. Commun.* **2005**, 3829-3831.

[5] [a]Y. Ping, D. Rocca, G. Galli, *Phys. Rev. B: Condens. Matter* **2013**, *87*, 165203; [b]F. Wang, C. Di Valentin, G. Pacchioni, *ChemCatChem* **2012**, *4*, 476-478; [c]F. Wang, C. Di Valentin, G. Pacchioni, *J. Phys. Chem. C* **2012**, *116*, 8901-8909; [d]G. A. de Wijs, P. K. de Boer, R. A. de Groot, G. Kresse, *Phys. Rev. B: Condens. Matter* **1999**, *59*, 2684-2693.

[6] [a]F. Amano, E. Ishinaga, A. Yamakata, *J. Phys. Chem. C* **2013**, *117*, 22584-22590; [b]F. M. Pesci, A. J. Cowan, B. D. Alexander, J. R. Durrant, D. R. Klug, *J. Phys. Chem. Lett.* **2011**, *2*, 1900-1903; [c]I. Bedja, S. Hotchandani, P. V. Kamat, *J. Phys. Chem.* **1993**, *97*, 11064-11070.

[7] Y. Uemura, H. Uehara, Y. Niwa, S. Nozawa, T. Sato, S. Adachi, B. Ohtani, S. Takakusagi, K. Asakura, *Chem. Lett.* **2014**, *43*, 977-979.

[8] [a]M. H. Rittmann-Frank, C. J. Milne, J. Rittmann, M. Reinhard, T. J. Penfold, M. Chergui, *Angew. Chem., Int. Ed.* **2014**, *53*, 5858-5862; [b]H. T. Lemke, C. Bressler, L. X. Chen, D. M. Fritz, K. J. Gaffney, A. Galler, W. Gawelda, K. Haldrup, R. W. Hartsock, H. Ihee, J. Kim, K. H. Kim, J. H. Lee, M. M. Nielsen, A. B. Stickrath, W. Zhang, D. Zhu, M. Cammarata, *J. Phys. Chem. A* **2013**, *117*, 735-740; [c]T. Sato, S. Nozawa, A. Tomita, M. Hoshino, S.-y. Koshihara, H. Fujii, S. Adachi, *J. Phys. Chem. C* **2012**, *116*, 14232-14236; [d]J. E. Katz, X. Zhang, K. Attenkofer, K. W. Chapman, C. Frandsen, P. Zarzycki, K. M. Rosso, R. W. Falcone, G. A. Waychunas, B. Gilbert, *Science* **2012**, *337*, 1200-1203; [e]X. Zhang, G. Smolentsev, J. Guo, K. Attenkofer, C. Kurtz, G. Jennings, J. V. Lockard, A. B. Stickrath, L. X. Chen, *J. Phys. Chem. Lett.* **2011**, *2*, 626-632; [f]J. E. Katz, B. Gilbert, X. Zhang, K. Attenkofer, R. W. Falcone, G. A. Waychunas, *J. Phys. Chem. Lett.* **2010**, *1*, 1372-1376; [g]R. M. van der Veen, C. J. Milne, A. El Nahhas, F. A. Lima, V.-T. Pham, J. Best, J. A. Weinstein, C. N. Borca, R. Abela, C. Bressler, M. Chergui, *Angew. Chem., Int. Ed.* **2009**, *121*, 2749-2752; [h]T. Sato, S. Nozawa, K. Ichiyanagi, A. Tomita, M. Chollet, H. Ichikawa, H. Fujii, S. Adachi, S. Koshihara, *J. Synchrotron Radiat.* **2009**, *16*, 110-115; [i]S. Nozawa, T. Sato, M. Chollet, K. Ichiyanagi, A. Tomita, H. Fujii, S. Adachi, S. Koshihara, *J. Am. Chem. Soc.* **2009**, *132*, 61-63; [j]C. Bressler, C. Milne, V. T. Pham, A. Elnahhas, R. M. Van Der Veen, W. Gawelda, S. Johnson, P. Beaud, D. Grolimund, M. Kaiser, C. N. Borca, G. Ingold, R. Abela, M. Chergui, *Science* **2009**, *323*, 489-492; [k]L. X. Chen, G. B. Shaw, I. Novozhilova, T. Liu, G. Jennings, K. Attenkofer, G. J. Meyer, P. Coppens, *J. Am. Chem. Soc.* **2003**, *125*, 7022-7034; [l]L. X. Chen, W. J. H. Jäger, G. Jennings, D. J. Gosztola, A. Munkholm, J. P. Hessler, *Science* **2001**, *292*, 262-264.

[9] [a]M. Yabashi, H. Tanaka, T. Tanaka, H. Tomizawa, T. Togashi, M. Nagasono, T. Ishikawa, J. R. Harries, Y. Hikosaka, A. Hishikawa, K. Nagaya, N. Saito, E. Shigemasa, K. Yamanouchi, K. Ueda, *J. Phys. B: At., Mol. Opt. Phys.* **2013**, *46*, 164001; [b]T. Ishikawa, *Synchrotron Radiation News* **2013**, *26*, 4-8.

[10] [a]K. Hatada, K. Hayakawa, M. Benfatto, C. R. Natoli, *J. Phys.: Condens. Matter* **2010**, *22*, 185501; [b]K. Hatada, K. Hayakawa, M. Benfatto, C. R. Natoli, *J. Phys.: Condens. Matter* **2009**, *21*, 104206.

Table of Contents

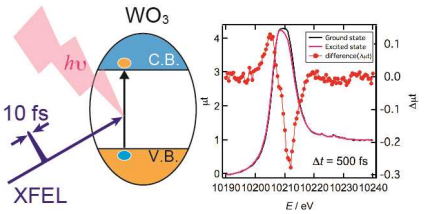

Photoexcited states of WO_3 were observed by femto-second X-ray absorption spectroscopy performed at XFEL. The local structural transformation of W was found, which followed the change of the local electronic state and proceeded in 200 ps after excitation.