Japanese Journal of Veterinary Research 71(3): 72-81, 2023

JJVR

REGULAR PAPER Experimental Research

The value of evaluating luteal blood flow on the day of embryo transfer for recipient selection in Holstein lactating dairy cows

Takashi Tanida[1,2], Itsuro Mukono[1], Mikiko Nakahashi[1], Daiki Miyano[1], Kurumi Miyazawa[1], Yojiro Yanagawa[3] and Seiji Katagiri[3,*]

[1] Ishikawa Prefectural Livestock Research Center, Houdatsushimizu, 929-1325, Japan
[2] Laboratory of Theriogenology, Department of Clinical Sciences, Graduate School of Veterinary Medicine, Hokkaido University, Sapporo 060-0818, Japan
[3] Laboratory of Theriogenology, Department of Clinical Sciences, Faculty of Veterinary Medicine, Hokkaido University, Sapporo 060-0818, Japan

Received for publication, December 1, 2022; accepted, July 27, 2023

Abstract

Recipient selection based on corpus luteum (CL) function is important for the success of embryo transfer (ET) in cattle. In this study, we evaluated the value of the parameters of luteal blood flow on the day of ET as a means of recipient selection in Holstein lactating dairy cows. The parameters of luteal blood flow [blood flow area (BFA) and blood perfusion (BP)], and CL size [luteal diameter, luteal area and luteal tissue area] and peripheral plasma progesterone (P_4) concentrations were evaluated at immediately before ET (n = 25) then cows were transferred embryos. The area under the ROC curve (AUC) showed that BFA and BP were effective to predict pregnancy and their AUCs (AUC > 0.70) were similar ($P > 0.1$). Pregnancy rates of high BFA (BFA ≥ 0.93 cm^2, n = 9) or BP (BP ≥ 26.0%, n = 12) groups was higher than that of low groups (BFA: 66.7% vs. 12.5%, BP: 50.0% vs. 15.4%). There was no correlation between plasma P_4 concentrations and luteal blood flow. The proportions of cows classified high group were different between cows with a large CL (luteal diameter ≥ 2.0 cm, n = 15) and those with a small CL (n = 10) in BFA (53.3% vs. 10.0%, $P < 0.05$) while similar between them in BP (46.7% vs. 50.0%). In conclusion, although BFA and BP are independent on the peripheral plasma P_4 concentration, they serve as indicators of fertility. The accuracy of predicting pregnancy might be similar, but the characteristic of recipient selection may be different between the two indicators.

Key Words: Embryo transfer, fertility, lactating dairy cows, luteal blood flow, recipient

Introduction

Embryo transfer (ET) has become widely used for calf production in both dairy and beef industry around the world. In the global trend, the number of *in vitro* produced bovine embryos transferred has been increasing, leading to an increase in the total number of embryos transferred[31]. Although ET has been originally developed for further accelerating genetic improvement in the artificial insemination (AI) - based cattle production system[19], ET is also being used for other purposes in dairy industry. For example, ET is used to improve fertility of dairy cows in hot season[5]

* Corresponding author: Seiji Katagiri
Laboratory of Theriogenology, Department of Clinical Sciences, Faculty of Veterinary Medicine, Hokkaido University, Sapporo 060-0818, Japan.
Tel.: +81-11-706-5231
Fax: +81-11-706-5234
E-mail address: katagiri@vetmed.hokudai.ac.jp
doi: 10.57494/jjvr.71.3_72

since this technology allows an embryo to bypass the period susceptible to heat stress (*i.e.,* day of estrous to fertilization)[10]. The production of beef breed calves by ET technology is also used as a means of increasing revenue of dairy farms[9,20]. Together, ET is more important than ever in management of dairy farms. Recipient selection is one of the key steps for the success of ET and, thus, the importance of assessing fertility in recipient cattle is also increasing.

For the survival and the normal development of preimplantation embryos in the uterus, enough amount of P_4 needs to be secreted by corpus luteum (CL)[30,33]. Progesterone changes uterine environment by regulating secretion of histotrophic substances and growth factors[8,11,12]. In cows with large embryos on day 16 (day 0 = estrus), the peripheral P_4 concentrations on day 4 start to rise earlier and remain higher during luteal phase compared with cows having small embryos[21]. Thus, the cows with high peripheral P_4 concentrations on the day of ET are thought to have more appropriate uterine environment for embryo development. Therefore, the peripheral P_4 concentration on the day of ET has been used as an indicator of CL function and fertility of recipient cattle[22,24]. In addition, CL size (luteal diameter[3,29], luteal tissue area[18], and luteal tissue volume[29]) shows positive correlation with the peripheral P_4 concentration. Hence, CL size determined by palpation per rectum and transrectal ultrasonography has long been used to predict fertility of recipients before ET in the field[2,4]. Additionally, co-existing dominant follicle size and uterine contraction at embryo transfer, which are clinical indicators of P_4/estradiol (E_2) ratio, have also been used for recipient selection. However, as the use of ET expands, more accurate indicators of CL function and fertility are required.

Luteal blood flow evaluated by using color doppler ultrasonography has been proposed as a novel indicator of CL function and, thus, fertility of recipient cattle[14,17,23]. Adequate luteal blood flow is necessary to provide substrates and nutrients to a CL for P_4 production and to release P_4 into circulation[7]. Several parameters have been reported as an indicator of luteal blood flow; blood flow area (BFA: area of colored signals in CL in color doppler ultrasound image)[14,17], blood perfusion (BP: proportion of BFA to luteal tissue area)[23], time-averaged maximum velocity at the base of the spiral artery (TAMV)[1,17].

Both BFA and luteal tissue area showed similarly close association to changes of the peripheral P_4 concentration during the early luteal phase (*i.e.,* the period prior to ET) in Holstein lactating dairy cows[14] and first week of pregnancy in *Bos indicus* lactating dairy cows[13]. Although information is limited[17], BFA on the day of ET has been shown more reliable as an indicator of fertility than luteal area, luteal tissue area and the peripheral P_4 concentration in Holstein lactating dairy cows with a large CL (2.0 cm or greater in diameter), which is the size of fully developed CL[27] and used for the criteria of recipient selection in the field[6,17]. However, BFA may not be a reliable indicator of fertility when the cows with a small CL (less than 2.0 cm in diameter) are included. In cows with a small CL, there is a possibility that some cows might have low absolute value of luteal blood flow (*i.e.,* low BFA) due to small size of CL but high relative value of luteal blood flow (*i.e.,* high BP) allowing high blood flow per the volume of tissue. Although it remains unclear whether BFA or BP is more related to be fertility, if BP are more related to fertility than BFA, the cows having low BFA but high BP would have high fertility. However, they would be judged as low fertility based on the BFA despite they have high fertility.

Blood perfusion on the day of ET was more closely associated with pregnancy outcome than luteal tissue area[23]. Blood perfusion has been shown to be useful for excluding recipients with low peripheral P_4 concentrations (*i.e.,* low P_4 secretion by CL) on the day of ET in beef heifers and suckled cows[23]. However, the peripheral P_4 concentration is largely affected by elevated clearance due to increased blood flow to the liver associated with high levels of dry matter intake in Holstein lactating dairy cows[33]. Therefore, the value of BP in ET recipient selection in Holstein lactating dairy cows needs to be investigated.

In addition, TAMV also showed close changes to the peripheral P_4 concentration during the early

luteal phase in Holstein lactating dairy cows[1]. However, TAMV on the day of ET was found unsuitable indicator of fertility of recipients in Holstein lactating dairy cows with a large CL (2.0 cm or greater in diameter)[17].

The objective of the present study was to evaluate the value of BFA and BP on the day of ET as a means of ET recipient selection in Holstein lactating dairy cows. We examined correlations of BFA and BP to the peripheral P_4 concentration on the day of ET in the cows. We also examined the value of these parameters in predicting pregnancy in Holstein lactating dairy cows, along with CL size and the peripheral P_4 concentration.

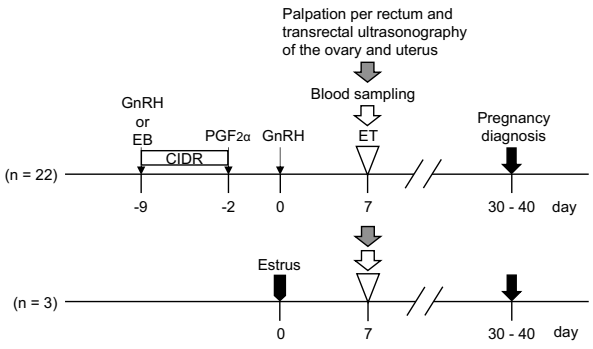

Fig. 1. A diagrammatic timeline of the treatment. Twenty-five Holstein lactating dairy cows were used for this study. Twenty-two cows were synchronized for ovulation. They were received a controlled intravaginal drug releasing device (CIDR) containing progesterone (P_4) for 7 days from any day in luteal phase (day -9). At the time of CIDR insertion, 100 µg of fertirelin acetate (GnRH) or 2 mg of estradiol benzoate (EB) was injected. On day -2, CIDR was removed and 500 µg of cloprostenol ($PGF_{2\alpha}$) was given. Then, 100 µg of GnRH was injected again on day 0. Three cows occurred estrous naturally and the day of estrous was defined as day 0. On day 7, blood was sampled for P_4 assay immediately before embryo transfer (ET). In addition, palpation per rectum and transrectal ultrasonography were performed for evaluating the morphology of the ovary and uterus and the uterine contraction immediately before ET on day 7. Thereafter, embryos were transferred to the cows. Pregnancy was diagnosed between day 30 and 40 by transrectal ultrasonography.

Materials and Methods

Animal

Animal experiments were conducted according to the guideline on animal experiments of Ishikawa Prefectural livestock Research Center from November 2019 to August 2020. Twenty-five Holstein lactating dairy cows were used for this study. They were housed in a commercial dairy farm located in Ishikawa prefecture, Japan. They were clinically normal cows with no detectable abnormality in their ovary and reproductive tract on rectum examination and transrectal ultrasonography on the day of ET. Their postpartum period, number of parities and number of services before recruitment for this study were 152.4 ± 77.2 days (mean ± SD), 3.2 ± 1.7 and 1.6 ± 2.1 times, respectively.

Ovulatory synchronization

Twenty-two cows were synchronized for ovulation using Ovsynch protocol with P_4 supplementation or E_2 administration with P_4 supplementation[32] (Fig. 1). Cows with a CL were received a controlled intravaginal drug releasing device (CIDR) containing 1.9 g of progesterone (CIDR 1900; Zoetis Japan, Tokyo, Japan) for seven days from any day in luteal phase (day -9). At the time of CIDR insertion, 100 µg of fertirelin acetate (GnRH: Fertirelin injection; Fujita pharmaceutical, Tokyo, Japan) (n = 19) or 2 mg of estradiol benzoate (Estradiol injection; Kyoritsu seiyaku, Tokyo, Japan) (n = 3) was injected. On day -2, CIDR was removed and 500 µg of cloprostenol (Cloprostenol C; Fujita pharmaceutical) was given. Then, GnRH was injected again on day 0. Three cows occurred estrous naturally and the day of estrus was defined as day 0 in these cows.

Evaluation of the morphology of the ovary and uterus and the uterine contraction

Morphology of the ovary and uterus and the uterine contraction were evaluated on day 7 by palpation per rectum and transrectal ultrasonography using a portable ultrasound diagnostic device (MyLab One Vet, Esaote Europe B.V., Maastricht, Netherland) by a single operator immediately before ET (Fig. 1). Ultrasound imaging settings were remained constant for all examinations (B-mode frequency and gain: 10 MHz and 90%; color-flow Doppler

Table 1. The definition of parameters of corpus luteum size and luteal blood flow

Parameter	Definition
Luteal diameter (cm)	The mean of major and minor axis of a CL[25]
Luteal area (cm^2)	The total area of CL including luteal cavity[17]
Luteal tissue area (cm^2)	The area obtained by subtracting luteal cavity area from luteal area[17]
Blood flow area (BFA) (cm^2)	he area of colored signals in a CL in color doppler ultrasound image[17]
Blood perfusion (BP) (%)	The proportion of blood flow area to luteal tissue area[23]

All parameters were evaluated by using a cross section image at the time when luteal area was defined as maximum.

mapping frequency, pulse repetition frequency and gain: 5.0 MHz, 500 Hz and 50%). Firstly, the number of CLs, the presence of co-existing dominant follicle and fluid in the uterine body and horn, the degree of uterine contraction were evaluated. All cows were confirmed to have a CL, a dominant follicle (diameter > 8.0 mm[16]), no apparent uterine contraction and no fluid in the uterine body and horn. Then, parameters of CL size (luteal diameter, luteal area and luteal tissue area) and luteal blood flow (BFA and BP) were measured (Table 1). These parameters were evaluated by a cross section image at the time when luteal area was defined as maximum. Major axis and minor axis of a corpus luteum, luteal area and luteal cavity area were measured by caliper function of ultrasonography device. Blood flow area was measured by using Image J (version 1.52) developed at the U.S. National Institutes of Health (https://imagej.nih.gov/ij/) according to the previous report[17]. Blood perfusion was calculated by dividing BFA by luteal tissue area and shown in percent.

Blood sampling and plasma progesterone assay

Blood was collected into vacuum tubes containing heparin (VP-H100K, Terumo, Tokyo, Japan) from the coccygeal or jugular vein for measuring plasma P_4 concentrations on day 7 immediately before ET (Fig. 1). Samples were protected from light and kept on ice immediately after collection until taking to the laboratory. Blood samples were centrifuged (1,550 × g, 30 min, 4°C) within 2 hours from sampling and plasma samples were obtained and stored at -80°C until analysis. Plasma P_4 concentrations were measured by electrochemiluminescence immunoassay (Cobas 8000 analyser series e801, Roche Diagnostics K.K., Tokyo, Japan). The intra- and interassay coefficients of variation were 2.5% and 3.2%, respectively, and sensitivity was 0.16 ng/ml.

Embryo transfer and pregnancy diagnosis

A single *in vivo* derived frozen-thawed Japanese Black cattle embryo (ZEN-NOH ET center, Kamishihoro, Japan) was transferred into the uterine horn ipsilateral to a CL by transcervical method using flexible transfer catheter (Mo–NO.4, S3CS-8041, Misawa Medical Industry, Kasama, Japan) per cow on day 7 (Fig. 1). The quality of commercial embryos was usually grade 1 of the International Embryo Transfer Society classifications[26]. Embryo transfer was conducted by two of authors. Pregnancy was diagnosed between day 30 and 40 by transrectal ultrasonography (Fig. 1).

Statistical analyses

The correlations between the plasma P_4 concentration and BFA or BP were evaluated by the Pearson's product moment correlation coefficient. The pregnancy rates were compared between cows with a large CL (luteal diameter ≥ 2.0 cm) and those with a small CL (luteal diameter < 2.0 cm) by the Fisher's exact test. A receiver operating characteristic (ROC) analysis was performed on luteal diameter, luteal area, luteal tissue area, BFA, BP and the plasma P_4 concentration with pregnant as positive. In each ROC analysis, the area under the ROC curve (AUC) was calculated. Furthermore, the cutoff value was determined from the data point on ROC curve having minimum distance from the upper

Table 2. The summary of the data of each parameter of CL size and luteal blood flow and the plasma progesterone concentration on the day of embryo transfer and their area under the ROC curve

Parameter	Mean ± SD (n = 25)	Area under the ROC curve
Luteal diameter (cm)	2.17 ± 0.32	0.56
Luteal area (cm^2)	3.81 ± 1.10	0.55
Luteal tissue area (cm^2)	3.62 ± 1.15	0.58
Blood flow area (BFA) (cm^2)	0.82 ± 0.47	0.79
Blood perfusion (BP) (%)	23.24 ± 12.52	0.72
Plasma progesterone (ng/ml)	2.90 ± 1.32	0.60

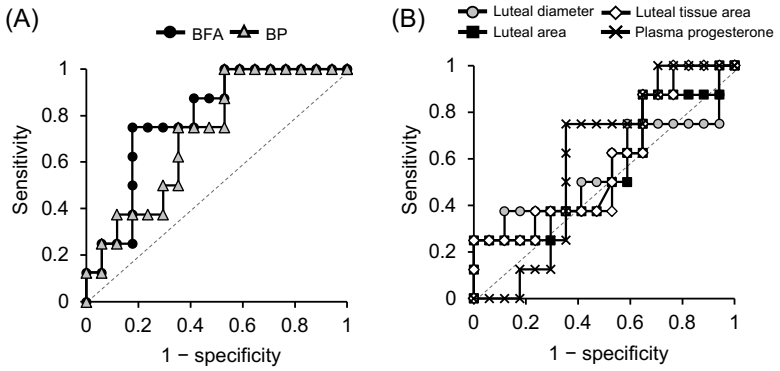

Fig. 2. The ROC curves of parameters of luteal blood flow (A) and CL size and the plasma progesterone concentration (B) on the day of embryo transfer. Areas under the ROC curves (AUC) of the blood flow area (BFA) and blood perfusion (BP) were more than 0.70 (A) (see Table 2 for values of AUCs). Areas under the ROC curves of CL size parameters and the plasma progesterone (P_4) concentration were less than 0.70 (B).

left corner of the unit square in each parameter. The difference between the AUCs of ROC curves obtained from parameters whose AUCs were more than or equal to 0.70 were compared using the DeLong's test. Thereafter, cows were divided into high or low groups based on the cutoff value in each parameter whose AUC was more than or equal to 0.70, which was considered as a parameter having acceptable discrimination[15]. Then, pregnancy rates were compared between the two groups by the Fisher's exact test. Furthermore, the frequencies of cows being classified the high group were compared between cows with a large CL and those with a small CL by the Fisher's exact test. All statistical analyses were performed with EZR (Saitama Medical Center, Jichi Medical University, Saitama, Japan), which is a graphical user interface for R (The R Foundation for Statistical Computing, Vienna, Austria). Differences with $P < 0.05$ were considered significant.

Results

The mean ± SD of each parameter of CL size and luteal blood flow and the plasma P_4 concentration is shown in Table 2. The postpartum period, the number of parities, the number of services before recruitment and the presence or absence of ovulatory synchronization of each cow is shown in Table 3.

The pregnancy rates were similar between cows with a large CL (33.3%, 5/15) and those with a small CL (30.0%, 3/10) ($P = 1.0$). In ROC analysis by using the data obtained from all cows regardless of the CL size, AUCs of the BFA and BP were 0.79 and 0.72, respectively (Fig. 2, Table 2). AUCs of these parameters were not significant different ($P > 0.1$). When the cutoff values were determined from the ROC curves having minimum distance from the upper left corner of the unit square, cutoff values of the BFA and BP were determined as 0.93 cm^2 and 26.0%, respectively.

Table 3. The diagnosis of blood flow area and blood flow perfusion and their pregnancy state in each cow

Cow	Luteal Diameter[a]	Blood flow Area[b]	Blood perfusion[c]	Pregnancy[d]	Postpartum period	parity	Number of services before recruitment for study	Ovulatory synchronized or spontaneous estrus
1	L	H	H	+	299	4	8	synchronized
2	L	H	H	+	235	3	2	synchronized
3	L	H	H	+	59	4	0	spontaneous
4	L	H	H	+	80	1	0	synchronized
5	L	H	H	-	112	2	1	synchronized
6	L	H	H	-	84	2	0	synchronized
7	L	H	H	-	223	5	2	synchronized
8	L	H	L	+	65	2	0	spontaneous
9	L	L	L	-	105	2	0	spontaneous
10	L	L	L	-	271	5	5	synchronized
11	L	L	L	-	140	5	1	synchronized
12	L	L	L	-	78	1	0	synchronized
13	L	L	L	-	84	1	0	synchronized
14	L	L	L	-	136	3	1	synchronized
15	L	L	L	-	117	7	2	synchronized
16	S	H	H	+	252	1	3	synchronized
17	S	L	H	+	78	3	0	synchronized
18	S	L	H	-	282	6	6	synchronized
19	S	L	H	-	220	1	5	synchronized
20	S	L	H	-	73	4	0	synchronized
21	S	L	L	+	75	5	0	synchronized
22	S	L	L	-	171	4	1	synchronized
23	S	L	L	-	234	4	2	synchronized
24	S	L	L	-	206	3	1	synchronized
25	S	L	L	-	131	2	1	synchronized

[a] Cows were divided into large (L) or small (S) groups based on the luteal diameter (Large: luteal diameter ≥ 2.0 cm, Small: < 2.0 cm).
[b] Cows were divided into high (H) or low (L) groups based on the cutoff value of blood flow area (BFA) determined by ROC analysis. The cutoff value was determined from the data point on ROC curve having minimum distance from the upper left corner of the unit square in each parameter (High: BFA ≥ 0.93 cm^2, Low: < 0.93 cm^2).
[c] Cows were divided into high (H) or low (L) groups based on the cutoff value of blood perfusion (BP) determined by ROC analysis. The cutoff value was determined from the data point on ROC curve having minimum distance from the upper left corner of the unit square in each parameter (High: BP ≥ 26.0 %, Low < 26.0 %).
[d] Pregnancy was diagnosed between day 30 and 40 by transrectal ultrasonography.

When the cows were divided into high (BFA ≥ 0.93 cm^2, BP ≥ 26.0%) or low groups, twenty cows were concordant in classifications of the BFA and BP, and five cows were not. Seven of eight cows (87.5%) that became pregnant were classified high group in either BFA or BP (Table 3). Five (No. 1, 2, 3, 4 and 16), one (No. 8) and one (No. 17) of eight cows that became pregnant were classified high group in both BFA and BP, BFA only and BP only, respectively. One (No. 21) of eight cows that became pregnant had a small CL and were classified low group in both BFA and BP. The pregnancy rate of the high BFA group (66.7%, 6/9) was higher than that of the low BFA group (12.5%, 2/16) ($P < 0.01$). The pregnancy rate of the high BP group (50.0%, 6/12) tended to be higher than that of the low BP group (15.4%, 2/13) ($P = 0.08$).

No correlation was found between the plasma P_4 concentration and parameters of the luteal blood flow (BFA: r = 0.24; BP: r = 0.06) ($P > 0.1$) (Fig. 3). In ROC analysis by using the data obtained from all cows regardless of the CL size, AUCs of the parameters of CL size and the plasma P_4 concentration were less than 0.70 (Table 2).

Around half of cows with a large CL were classified as high in both BFA (53.3%, 8/15) and BP (46.7%, 7/15) groups (Table 3). On the other hands, the frequency of the cows being classified high BFA

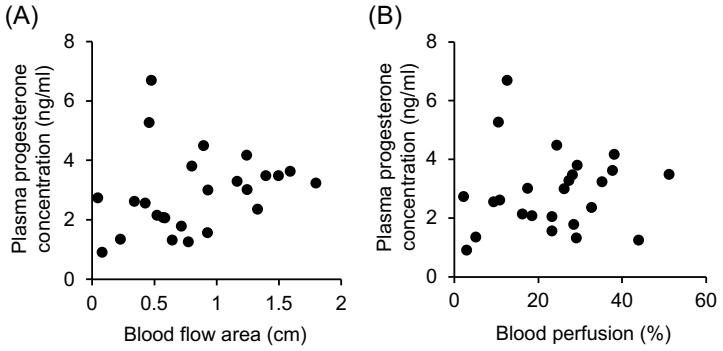

Fig. 3. The relationship between the plasma progesterone concentration and blood flow area (BFA) or blood perfusion (BP) of CL.
n = 25. There was no correlation between the plasma progesterone concentration and BFA (A, r = 0.24) or BP (B, r = 0.06), respectively ($P > 0.1$, the Pearson's product moment correlation coefficient).

group was lower in cows with a small CL (10.0%, 1/10) than in cows with a large CL ($P < 0.05$). The frequency of the cows being classified high BP group were similar between cows with a small CL (50.0%, 5/10) and those with a large CL ($P > 0.1$).

Discussion

The present results showed that BFA and BP on the day of ET serve as indicators of fertility even if not only cows with a large CL but also cows with a small CL were included as recipients. The accuracy of predicting fertility might be similar, but the characteristic of recipient selection may be different between BFA and BP.

The peripheral P_4 concentration has been used as an indicator of CL function (*i.e.*, P_4 production) and fertility of ET recipient heifers[22,24]. Luteal blood flow has been proposed as a novel indicator of CL function and, thus, fertility of ET recipient cattle[14,17,23]. Blood flow area and BP are parameters of luteal blood flow. Blood flow area showed similarly close association to the changes of the peripheral P_4 concentration during the early luteal phase in Holstein lactating dairy cows[14]. Blood flow area on the day of ET has been reported to be a reliable indicator of fertility in Holstein lactating dairy cows with a large CL (≥ 2.0 cm in diameter)[17]. The peripheral P_4 concentration was low on the day of ET in beef cattle with low BP, which had low fertility[23]. Therefore, we hypothesized that BFA and BP on the day of ET could estimate the level of the peripheral P_4 concentration and, thus, serve as indicators of fertility in Holstein lactating dairy cows. The present results showed that BFA and BP on the day of ET could be useful indicators of fertility in Holstein lactating dairy cows. Furthermore, the present result of the comparison of AUCs of ROC curves showed that the accuracy of predicting fertility might be similar between BFA and BP. However, BFA and BP were not closely related to the peripheral P_4 concentration. The present results are similar to the previous report showing that BFA on the day of ET was more appropriate for predicting pregnancy than the peripheral P_4 concentration in lactating dairy cows[17]. High levels of lactation in Holstein dairy cows may be one of the reasons of the contradiction between the hypothesis and the present results. In Holstein lactating dairy cows, increased feed intake for high levels of milk production leads to an increase in liver blood flow and, thus, P_4 clearance from circulation[28,33]. Although the milk yield of each cow was not recorded in the present study, their lactation stages were different between cows, thus, the level of P_4 clearance might be different between them. This means that the amount of P_4 produced by the CL cannot be accurately estimated from the peripheral P_4 concentration in Holstein lactating dairy cows. Alternatively, the luteal blood flow

levels may indicate CL function, *i.e.,* P_4 production, more precisely than peripheral P_4 concentrations. The evaluation of the local P_4 concentration in the ovarian and uterine artery may explain the relationship between the CL function and BFA and BP in Holstein lactating dairy cows.

In the present study, cows with high BFA were mostly selected from cows with a large CL while cows with high BP were equally selected from cows with a large CL or those with a small CL. Since BFA was measured as the area of blood flow surrounding the CL, BFA might be dependent on the size of the CL. Therefore, a well-developed, large functional CL is expected to have a large BFA, and the results of present study may support this assumption. On the other hand, since BP is a value corrected by the area of the CL, it is thought that even a small CL showed a high BP. In the present study, fertility tended to be higher when the BP was high, suggesting that even the recipient with a small CL may be fertile if the CL has active blood flow. This may be one of the reasons why CL size did not affect fertility in this study. These results suggest that the characteristics of recipient selection may differ between BFA and BP, and that this difference may be related to the size of the CL. Further studies with a larger number of cases are needed to evaluate differences in recipient selection characteristics in detail.

Corpus luteum size during the early luteal phase has been reported to be a reliable indicator of fertility after artificial insemination (AI)[13] and ET[2,4]. Luteal tissue area (the area obtained by subtracting luteal cavity area from luteal area) in pregnant cattle has been reported to be larger than that in non-pregnant cattle on day 6 and day 7 following AI in *Bos indicus* lactating cows[13]. The luteal diameter serves as an indicator of fertility of recipients in beef cattle[2,4]. However, luteal blood flow has been reported to be more closely related to fertility than CL size on the day of ET in Holstein lactating dairy cows[17] and in beef cattle[23]. Luteal area and luteal tissue area on the day of ET had lower diagnostic value of fertility than BFA in Holstein lactating dairy cows with a large CL ($\geq$ 2.0 cm in diameter) by using a ROC analysis[17]. Luteal tissue area on the day of ET was less closely associated with pregnancy outcome than BP in beef cattle[23]. The present results of ROC analysis are similar to these previous results. These results indicate that BFA and BP on the day of ET are more useful indicators of fertility than CL size in cattle.

In conclusion, we confirmed that BFA and BP on the day of ET have potential value as a means of recipient selection in Holstein lactating dairy cows. These parameters are independent on the peripheral P_4 concentration and more closely related to fertility than the peripheral P_4 concentration and CL size on the day of ET in Holstein lactating dairy cows. The accuracy of predicting fertility might be similar, but the characteristic of recipient selection between BFA and BP may be different although a further investigation using a large sample size is needed.

Acknowledgments

We thank to a farmer for providing cows and technical assistant for this study. We also thank to a local veterinarian and SRL incorporation for their technical assistance for this study. This work was supported by Ishikawa prefecture. This work was also supported by JSPS KAKENHI Grant Number 19H00964 and 22J20415.

References

1) Acosta TJ, Hayashi KG, Ohtani M, Miyamoto A. Local changes in blood flow within the preovulatory follicle wall and early corpus luteum in cows. Reproduction 125, 759–767, 2003. doi: 10.1530/rep.0.1250759.
2) Alkan H, Karaşahin T, Dursun Ş, Satılmış F, Erdem H, Güler M. Evaluation of the factors that affect the pregnancy rates during embryo transfer in beef heifers. Reprod Domest Anim 55, 421–428, 2020. doi: 10.1111/rda.13623.
3) Assey RJ, Purwantara B, Greve T, Hyttel P, Schmidt MH. Corpus luteum size and plasma progesterone levels in cattle

after cloprostenol-induced luteolysis. Theriogenology 39, 1321–1330, 1993. doi: 10.1016/0093-691X(93)90234-V.

4) Baruselli PS, Ferreira RM, Sá Filho MF, Nasser LFT, Rodrigues CA, Bó GA. Bovine embryo transfer recipient synchronisation and management in tropical environments. Reprod Fertil Dev 22, 67–74, 2010. doi: 10.1071/RD09214.
5) Baruselli PS, Ferreira RM, Vieira LM, Souza AH, Bó GA, Rodrigues CA. Use of embryo transfer to alleviate infertility caused by heat stress. Theriogenology 155, 1–11, 2020. doi: 10.1016/j.theriogenology.2020.04.028.
6) Bényei B, Komlósi I, Pécsi A, Pollott G, Marcos CH, de Oliveira Campos A, Lemes MP. The effect of internal and external factors on bovine embryo transfer results in a tropical environment. Anim Reprod Sci 93, 268–279, 2006. doi: 10.1016/j.anireprosci.2005.07.012.
7) Bollwein H, Lüttgenau J, Herzog K. Bovine luteal blood flow: Basic mechanism and clinical relevance. Reprod Fertil Dev 25, 71–79, 2013. doi: 10.1071/RD12278.
8) Clemente M, de La Fuente J, Fair T, Al Naib A, Gutierrez-Adan A, Roche JF, Rizos D, Lonergan P. Progesterone and conceptus elongation in cattle: A direct effect on the embryo or an indirect effect via the endometrium? Reproduction 138, 507–517, 2009. doi: 10.1530/REP-09-0152.
9) Crowe AD, Lonergan P, Butler ST. Invited review: Use of assisted reproduction techniques to accelerate genetic gain and increase value of beef production in dairy herds. J Dairy Sci 104, 12189–12206, 2021. doi: 10.3168/jds.2021-20281.
10) Ealy AD, Drost M, Hansen PJ. Developmental changes in embryonic resistance to adverse effects of maternal heat stress in cows. J Dairy Sci 76, 2899–2905, 1993. doi: 10.3168/jds.S0022-0302(93)77629-8.
11) Forde N, Beltman ME, Duffy GB, Duffy P, Mehta JP, O'Gaora P, Roche JF, Lonergan P, Crowe MA. Changes in the endometrial transcriptome during the bovine estrous cycle: effect of low circulating progesterone and consequences for conceptus elongation. Biol Reprod 84, 266–278, 2011. doi: 10.1095/biolreprod.110.085910.
12) Forde N, Spencer TE, Bazer FW, Song G, Roche JF, Lonergan P. Effect of pregnancy and progesterone concentration on expression of genes encoding for transporters or secreted proteins in the bovine endometrium. Physiol Genomics 41, 53–62, 2010. doi: 10.1152/physiolgenomics.00162.2009.
13) Hassan M, Arshad U, Bilal M, Sattar A, Avais M, Bollwein H, Ahmad N. Luteal blood flow measured by Doppler ultrasonography during the first three weeks after artificial insemination in pregnant and non-pregnant Bos indicus dairy cows. J Reprod Dev 65, 29–36, 2019. doi: 10.1262/jrd.2018-084.
14) Herzog K, Brockhan-Lüdemann M, Kaske M, Beindorff N, Paul V, Niemann H, Bollwein H. Luteal blood flow is a more appropriate indicator for luteal function during the bovine estrous cycle than luteal size. Theriogenology 73, 691–697, 2010. doi: 10.1016/j.theriogenology.2009.11.016.
15) Hosmer DW Jr, Lemeshow S, Sturdivant RX. Applied Logistic Regression, 3rd ed. John Wiley Sons, Hoboken. pp.173–182, 2013. doi: 10.1002/9781118548387.
16) Ireland JJ, Mihm M, Austin E, Diskin MG, Roche JF. Historical perspective of turnover of dominant follicles during the bovine estrous cycle: Key concepts, studies, advancements, and terms. J Dairy Sci 83, 1648–1658, 2000. doi: 10.3168/jds.S0022-0302(00)75033-8.
17) Kanazawa T, Seki M, Ishiyama K, Kubo T, Kaneda Y, Sakaguchi M, Izaike Y, Takahashi T. Pregnancy prediction on the day of embryo transfer (Day 7) and Day 14 by measuring luteal blood flow in dairy cows. Theriogenology 86, 1436–1444, 2016. doi: 10.1016/j.theriogenology.2016.05.001.
18) Kastelic JP, Bergfelt DR, Ginther OJ. Relationship between ultrasonic assessment of the corpus luteum and plasma progesterone concentration in heifers. Theriogenology 33, 1269–1278, 1990. doi: 10.1016/0093-691X(90)90045-U.

19) Lohuis MM. Potential benefits of bovine embryo-manipulation technologies to genetic improvement programs. Theriogenology 43, 51–60, 1995. doi: 10.1016/0093-691X(94)00016-N.
20) MAFF. 2020. The goals of livestock improvement and breeding. https://www.maff.go.jp/j/chikusan/sinko/lin/l_katiku/ (*In Japanese*) [accessed on January 7, 2022].
21) Mann GE, Lamming GE, Robinson RS, Wathes DC. The regulation of interferon-τ production and uterine hormone receptors during early pregnancy. J Reprod Fertil Suppl 54, 317–328, 1999.
22) Niemann H, Sacher B, Elsaesser F. Pregnancy rates relative to recipient plasma progesterone levels on the day of nonsurgical transfer of frozen/thawed bovine embryos. Theriogenology 23, 631–639, 1985. doi: 10.1016/0093-691x(85)90197-9.
23) Pugliesi G, Dalmaso de Melo G, Silva JB, Carvalhêdo AS, Lopes E, de Siqueira Filho E, Silva LA, Binelli M. Use of color-Doppler ultrasonography for selection of recipients in timed-embryo transfer programs in beef cattle. Theriogenology 135, 73–79, 2019. doi: 10.1016/j.theriogenology.2019.06.006.
24) Remsen LG, Roussel JD, Karihaloo AK. Pregnancy rates relating to plasma progesterone levels in recipient heifers at day of transfer. Theriogenology 18, 365–372, 1982. doi: 10.1016/0093-691x(82)90014-0.
25) Ricci A, Carvalho PD, Amundson MC, Fricke PM. Characterization of luteal dynamics in lactating Holstein cows for 32 days after synchronization of ovulation and timed artificial insemination. J Dairy Sci 100, 9851–9860, 2017. doi: 10.3168/jds.2017-13293.
26) Robertson I, Nelson RE. Certification and identification of embryos. In: Manual of the International Embryo Transfer Society, 4th ed. Stringfellow DA, Givens MD. eds. International Embryo Transfer Society, Champaign. pp.86–105, 2010.
27) Robinson BS, Noakes DE. Reproductive physiology of the female. In: Veterinary Reproduction and Obstetrics, 10th ed. Noakes DE, Parkinson TJ, England GCW. eds. Elsevier, Amsterdam. pp. 2–34, 2019. doi: 10.1016/B978-0-7020-7233-8.00001-X.
28) Sangsritavong S, Combs DK, Sartori R, Armentano LE, Wiltbank MC. High feed intake increases liver blood flow and metabolism of progesterone and estradiol-17β in dairy cattle. J Dairy Sci 85, 2831–2842, 2002. doi: 10.3168/jds.S0022-0302(02)74370-1.
29) Spell AR, Beal WE, Corah LR, Lamb GC. Evaluating recipient and embryo factors that affect pregnancy rates of embryo transfer in beef cattle. Theriogenology 56, 287–297, 2001. doi: 10.1016/s0093-691x(01)00563-5.
30) Spencer TE, Forde N, Lonergan P. The role of progesterone and conceptus-derived factors in uterine biology during early pregnancy in ruminants. J Dairy Sci 99, 5941–5950, 2016. doi: 10.3168/jds.2015-10070.
31) Viana JHM. 2020 statistics of embryo production and transfer in domestic farm animals. Embryo technology newsletter 39, 1–14, 2021.
32) Wiltbank MC, Pursley JR. The cow as an induced ovulator: Timed AI after synchronization of ovulation. Theriogenology 81, 170–185, 2014. doi: 10.1016/j.theriogenology.2013.09.017.
33) Wiltbank MC, Souza AH, Carvalho PD, Cunha AP, Giordano JO, Fricke PM, Baez GM, Diskin MG. Physiological and practical effects of progesterone on reproduction in dairy cattle. Animal 8 Suppl 1, 70–81, 2014. doi: 10.1017/S1751731114000585.