HOKKAIDO UNIVERSITY

Title	Summary International Reports, July 1987-June 1988
Citation	Memoirs of the Faculty of Engineering, Hokkaido University, 17(3), 317-438
Issue Date	1988-12
Doc URL	https://hdl.handle.net/2115/38031
Type	other
File Information	17(3)_317-438.pdf

Hokkaido University Collection of Scholarly and Academic Papers : HUSCAP

Sixteenth International Symposium on Space Technology and Science (ISTS), Sapporo, Japan, May 22-27, 1988

Natural Vibrations of Shells of Revolution Using the Collocation Method

Jin YOSHIMUMA and Takashi MIKAMI
Department of Civil Engineering
Hokkaido University, Sapporo 060, Japan

The purpose of this paper is to develop an efficient and accurate numerical method for the determination of the natural frequencies and mode shapes of natural vibration of shells of revolution. The method presented herein is a collocation method in which the interior collocation points are taken as the roots of orthogonal polynomial. The method is applicable to all eigenvalue problems written down in the form of a two-point boundary value problem.

The equations of motion are based on an improved shell theory including the effects of shear deformation and rotary inertia for application to thin and moderately thick shells. This paper deals with the eigenvalue problem governed by a system of linear second-order ordinary differential equations in terms of displacements.

The 19th Annual Offshore Technology Conference May 15-19, Houston U. S. A

An Experimental Study on Abrasion of Concrete Due to Sea Ice

by Y. ITOH, A. YOSHIDA, M. TSUCHIYA, and K. KATOH, Taisei Corp.,
and K. SASAKI and H. SAEKI,

Laboratory tests were performed to investgate how sea ice abrades concrete and to clarify what the major factors are in estimating wear depth of concrete due to sea ice. This paper outlines a new apparatus developed by the authors for ice abrasion testing and the significant results obtained by using the appparatus.

The tests were carried out by changing various parameters which influence the wear rate of normal weight and lightweight concrete. They included type of aggregate, concrete strength, ice temperature, contact pressure, and relative velocity between ice and concrete. Among these, the ice temperature and contact pressure were found to be the most significant parameters. The results were summarized in chart form, as the first step toward realizing accurate estimation of wear rate.

The effect of surface treatment including polyurethane resin lining, resin mortar lining and polymer impregnation was also examined.

The 9th International Conference on Port and Ocean Engineering under Arctic Conditions.
Aug. 17-21, 1987 Fairbanks, U. S. A

The Coefficient of Friction Between Concrete and Asphalt-mat

Hideaki TAKEDA
Airport Division, Port and Harbor Dept., Hokkaido Development Bureau
Yuzo MIZUNO
Harbor and Coastal Hydraulics Lab., Civil Engineering Research Institute, Hokkaido Development Bureau
Naoki NAKAZAWA
Department of Civil Engineering, University of Alaska-Fairbanks
Toshiyuki ONO, Hiroshi SAEKI
Department of Civil Engineering, Hokkaido University

Concrete caissons for breakwaters and offshore structures are usually put directly on rock mounds, but if asphaltmats are laid between the concrete caissons and the rock mounds, the coefficients of friction can be increased ; therefore, the construction of more economical structures is possible. For example, the use of asphalt-mats for gravity-type maritime structures constructed in cold regions where there are severe ice and wave conditions.

The authors have been conducting, for 5 years, coefficients of friction (static and kinetic) experiments between asphalt-mats and concrete and mortar specimens.

These coefficients have been found to be affected by the following:

1) relative velocity (i. e., velocity of concrete caissons relative to asphaltmats),
2) normal stress,
3) normal stress duration,
4) water temperature,
5) surface roughness (concrete/mortar slab).

They have been found to be relatively unaffected by the following:

1) elapsed time from the date of asphalt-mat manufacture when mats were stored on seabed.

The 9th International Conference on Port and Ocean Engineering under Arctic Conditions. Aug. 17-21, 1987 Fairbanks, U. S. A

Testing Methods on Sea Ice-Concreet Sliding Abrasion

Yoshishige ITOH, Akira YOSHIDA
and Yuichiro ASAI
Taisei Corporation 25-1, Nishi-shinjuku 1-Chome
Shinjuku-ku, Tokyo, 160-91, Japan

Kohki SASAKI, Hiroshi SAEKI
Dept. of Civil Engineering Hokkaido University
Kita-13, Nishi-8, Sapporo, 060 Japan

1. Introduction

The most important characteristics required of the concrete used for arctic offshore concrete structures are: (1) durability against freezing and thawing, and (2) durability against abrasion due to sea ice. Various technological advancements have so far been made for freeze/thaw durability of lightweight concrete. On the other hand, it has been reported that the underwater section of the lighthouses in Bothnia Bay and the concrete piers of the Akkeshi Ohashi in Hokkaido have been damaged due to the abrasion of concrete. As the concrete members in the splash zones which are subject to abrasion by sea ice are also subjected to freezing and thawing, it is very difficult to measure only the abrasion amount on an existing structure. With the recent development of high strength concrete, structures which are durable against freezing and thawing have already been constructed in some locations, and it is expected that the extent of damage due to abrasion by sea ice will be better understood in the near future.

This report describes the outline of our recently developed testing apparatus for abrasion test, as well as the results of the experiments conducted using the testing apparatus.

The 9th International Conference on Port and Ocean Engineering under Arctic Conditions. Aug. 17-21, 1987, Fairbanks, U. S. A

The Distribution of Ice Pressure Acting on an Offshore Circular Pile

Sachito TANAKA
Kawasaki Steel Corp. Japan

Toshiyuki ONO, Kohki SASAKI and Hiroshi SAEKI
Hokkaido University, Japan

For the design of a pile supported structure in arctic areas, it is very important to estimate how large the local ice pressure is which acts on the contact surface of the piles. In addition, structural analysis for buckling of the contact surface is necessary when the thickness of the pile is determined.

Systematic experiments were conducted to clarify the distribution of ice pressure acting on a circular pile. This paper describes the principal results of these experiments which are summarized as follows: (1) the maximum total ice force in all of the indentation tests was determined to be about 2.6 times the force in penetration tests; (2) the time elapsed from load start to the peak of total ice force for each indentation test increased as the strain rate decreased; (3) the maximum radial component of local ice pressure in the transition range occurred at the center of the contact area and was about 5 times the uniaxial compressive strength of sea ice; (4) the circumferential component depends on the angle from the movements of the pile to the measured point. The maximum component occurs in both the transition and the ductile ranges when the angle is 45 (deg): and, (5) it was confirmed that the distribution of local ice pressure depends on strain rate defined by Michel and Toussaint (1977).

First International Symposium on Surface Characteristics State College, Pennsylvania, U. S. A. June, 7-9, 1988

Skidding Resistance Values on Snow and Ice Surfaces

Terutoshi KAKU, Takashi NAKATUJI, Takashi FUJIWARA,
Toru HAGIWARA and Yuki ONODERA
Department of Civil Engineering, Hokkaido University

The skidding resistance on snowy and icy roads is much less than that on clear roads, humce it can be said that traffic accidents are closely related to skidding in many cases. Thus are investigated the road condtions, skidding resistance value, and their relationship to traffic accident rates during winter.

The model for the estimatson of number of days of slippery road conditions was constructed. Monthly slippery road condition days in 1982, 1983 and 1984 wer calculated using this model.

We carried out measurements of the skid resistance number on slippery road surfaces in Hokkaido.

The measurment involves approximately 5,000 individual skid tests on slippery road surfaces.

The accident rate predictive model in winter was designed from the road conditions and the meteorological conditions. Road surface conditions under no snow during winter is assumed, and reduced number of accidents is estimated.

First International Symposium on Road Surface Characreristics, Pennsylvania, U. N. A. June 7-9, 1988

Dynamic Behavior of a Vehicle on a Rutted Road

Terutoshi KAKU, Takashi NAKATSUJI, Takashi FUJIWARA,
Toru HAGIWARA, and Yuki ONODERA
Faculty of Engineering, Hokkaido University

Wheel ruts on paved roads strongly affect the maneuverability of a vehicle. In order to investigate the dynamic behavior of a vehicle on a rutted road, various running tests and imulation analyses were performed.

1. It was shown that RMS values of steering variables for a rutted road are several times as larbe as those for a flat road.

2. The lateral displacement at a sprung mass, which results from the rigid body motion and has a frequency content below 1 Hz, plays an important role in unstable steering on a rutted road.

3. The effects of visual guidance would lead to stable steering.

4. The harder the running conditions, the larger the effects of sprung mass motion on the lateral unsprung mass motion.

5. Another likely cause of difficulty in steering on a rutted road may be the unstable delay of response of the vehicle motion to steeering.

6. The computer simulation model we developed was very effective to analyze the behavior of a vehicle on a rutted road.

8Th Asian Regional Conference on Soil Mechanics and Foundation Engineering, Kyoto, Japan, July, 1986

Sand Behavior under Principal Stress Axes Rotation

Shosuke TOKI*, Seiichi MIURA** and Kinya MIURA*
* Dept. of Civil Engineering, Hokkaido Univ.
** Dept, of Civil Engineering, Muroran Inst. of Technology

In order to reveal the deformation-strength anisotropy of sand under the rotation of principal stress axes and its dependency on the stress system, a series of torsional shear tests was carried out on anisotropic dense sand specimens. The experimental results showed that the deformation behavior of the sand with cross-anisotropic fabric can be explained clearly precisely by the predominant sliding occurring on the bedding plane with the lowest resistance value against shear stress, This is irrespective of whether the principal stress axes are rotated or not. It was also indicated that the stress system corresponding to the plane strain condition is independent of the principal stress axes rotation.

9th Southeast Asian Geotechnical Conference Bangkok, Thailand, December, 7-11, 1987

Influence of Consolidation Duration on Shear Characteristics of Organic Soils

Masaki TSUSHIMA* and Toshiyuki MITACHI**
* Akita National College of Technology, Akita, Japan
** Dept. of Civil Engineering, Hokkaido University, Sapporo, Japan

The influence of consolidation duration on the angle of shearing resistance and the stress-strain-dilatancy behavior of peat is investigated. Based on a series of CU triaxial tests, it was found that the shear stress-strain curves are greatly influenced by the length of consolidation duration, and the undrained shear strength increases with the increase in organic matter content of specimen for the same consolidation duration. It was also found that the effective angle of shearing resistance and dilatancy coefficient of peat are affected by the time of consolidation, and that both parameters are closely related to each other.

6th International Conference on Numerical Methods in Geomechanics, Innsbruck, Austria, April, 11-15, 1988

Constitutive modelling for anisotropically overconsolidated clay

Yukihiro KOHATA*, Toshiyuki MITACHI* and Mitsugu KAWADA**
* Dept. of Civil Engineering, Hokkaido University, Sapporo, Japan
** Hokkaido Development Bureau, Japan

A series of consolidated drained traiaxial tests on a saturated remolded clay was performed. Triaxial test specimens were first consolidated and rebounded under K_0 condition to the stress states at which OCR are 2, 4 and 10. Then drained stress probe tests along six stress paths for each OCR were conducted to investigate the influence of anisotropic stress history and stress path on the stress-strain behavior of overconsolidated clay. Based on the test results, a constitutive model which describes the stress-strain characteristics of anisotropically overconsolidated clay was proposed.

1988 Annual Meeting of Seismological Society of America with Seismological Society of Japan, June 23-28, Honolulu, Hawaii, U. S. A

Predominant Motion of the Los Angeles Sedimentary Basin

M. DRAVINSKI*1, T. MOSSESSIAN*1, H. ESHRAGHI*1, H. KAGAMI*2
*1University of California, U. S. A
*2Dept of Architectural Engineering, Hokkaido University

Predominant motion of the Los Angeles sedimentary basin is first investigated experimentally by measuring long period microtremors along two characteristic sections of the basin. Time-domain records have been obtained and then corresponding frequency spectra are calculated for the determination of the frequency of predominant motion of the basin for the two sections of the basin.

Surface displacement amplitude is calculated for a wide range of frequencies by using an indirect boundary integral equation approach. From these results the frequency corresponding to the predominant motion for the two sections of the basin are identified. These results are in very good agreement with the experimental values.

1988 Annual Meeting of Seismological Society of America joint with Seismological Society of Japan, June 23-28, Honolulu, Hawaii, U. S. A

A Comparison of Household Earthquake Safety Between U. S. A and Japan — Based on Surveyed Data of Several Hundred Households —

H. KAGAMI, H. OHASHI-MURAKAMI, A. ONODA, and Y. OHTA
Department of Architectural Engineering

A simple and effective method for making a diagnosis of the earthquake safety in a household unit was developed using household and surrounding characteristic data by a questionnaire survey. 11 major earthquake risks are assessed by using a causal chain model for many disaster aspects from direct to indirect.

A questionnaire form and diagnostic algorithm were developed through a pilot test in Kawasaki city. Then a full survey of a size of 800 households was conducted in the same city and its practical usefulness was confirmed. A continuing survey was also performed for 275 households in Los Angeles area, U. S. A. Based on the comparison of estimated results between the two countries, it was found that some items in seismic safety are much advanced in U. S. A but some

others are not, and therefore it was concluded that a closer exchange of ideas between the two countries is a better and effective way of developing household safety.

1988 Annual Meeting of Seismological Society of America joint with Seismological Society of Japan, June 23-28, Honolulu, Hawaii, U. S. A

A Study on Seismic Risk Assessment of Urban Street and Surroundings

Shinobu SAKAI and YUTAKA OHTA
Department of Architectural Engineering

Based on the assumption that the street disasters in an earthquake are the compound result of a series of related events a chain model of 11 essential disasters was first proposed for the effective use of vulnerability functions. This is a probable description of the features of disaster aspects in response to seismic input. Then, relevant data for this assessment were obtained by conducting a field survey in a variety of streets in Kawasaki city.

Seismic risk potentials of all disaster aspects were calculated encompassing all the surveyed streets. A comparison was then made among the surveyed streets. In this survey we could see how one disaster triggers another, and we could recognize its effectiveness as a tool for assessing seismic risk potentials for urban streets.

Water 2000, Symposium of 40th Years Anniversary of International Water Supply Association, Oct. 1987, Nice France.

Dynamic Separation

Katsuhiro HASHIMOTO
Division of Research and Development, Suido Kiko Kaisha, Ltd.,
Tokyo 103, Japan

Norihito TAMBO
Department of Sanitary and Environmental Engineering
Faculty of Engineering, Hokkaido University
Sapporo 060, Japan

Historically, improvement of a sedimentation basin performance has been carried out in the category of over flow rate theory. Extreme developments of this design principle are seen in tube settler and multiple-stage slant-board settler which have the lowest overflow rate in a laminar flow regime. The authors have proposed a new dynamic separation method and succeeded in overcom-

ing the limit of the conventional over flow rate improvement. The proposed separation device is the finned channel separator in which parallel fins perpendicular to the direction of flow are placed at an angle of incidence on slant boards. Theoretical and experimental studies were carried out in order to establish the new dynamic separation method as a practical technique on a sound theoretical basis.

The 6th Asia Pacific Regional Water Supply Conference, Dec. 1987, Bangkok Thailand.

" Metastable state operation for separation "

Norihito TAMBO, Yoshihiko MATSUI
Department of Sanitary and Environmental Engineering
Faculty of Engineering, Hokkaido University
Sapporo 060, Japan

The authors proposed a fluidized pellet bed separation process to remove high concentration clay particles from turbid river waters with an extraordinary high rate such as 30-50 cm/min upflow velocity. By a series of experiments for high turbidity suspensions, ranging from hundreds to thousands mg/l concentration, it is proved that in a few minutes detention time the suspensions were treated with good effluent quality and without any additional difficulties of sludge treatment. The mechanism of the process was discussed.

The 4th International Conference on Indoor Air Quality and Climate 17-21 August 1987, Berlin(West)

A Study on Indoor Radon and Radon Daughter Concentrations in Hokkaido of Japan

Shintaro YOKOYAMA and Kiyoshi OCHIFUJI
Hokkaido University, Sapporo, Japan

Abstract

We examined several aspects of the filter pack method and extended its application for field survey. By the modified filter pack method Rn daughter concentrations in 26 houses were measured during the autumn and the winter in Hokkaido, where energy-efficient houses are increasing remarkably. The types of house were wooden, concrete single and concrete apartment houses. The concentration of concrete single house in winter was higher than those of the other

house types. Annual variation of Rn concentration was investigated in the representatives of three house types using the electrostatic Rn monitor method. The peak concentration of each house type in winter was considerably higher than that obtained in the central Japan. Dynamic simulation of the effect of mechanical ventilation with kitchen fan and heat exchanger on indoor concentrations was performed.

International Conference on Water and Wastewater Microbiology
Newport Beach, California
February 8-11, 1988

Mechanism of Volatile Fatty Acid Removal in a Fixed Biofilm Methane Fermentation Reactor

Y. INOUE and K. KOYAMA
Dept. of Environmental and Sanitary Engineering
Hokkaido University, Sapporo, 060 Japan

It was found that hydrogen plays a most important role as a acceleration factor of acetate decomposition to methane. This was investigated based on the theory of catabolized reactions of acetate, propionate, and butyrate. To demonstrate the hydrogen effect, several batch experiments were carried out with a fixed biofilm methane fermentation reactor (FBMFR) using the sole substrate of acetate, propionate and butyrate or a mixture of substrates (acetate-propionate, acetate-butyrate).

While using each volatile fatty acid and the mixture, experiment of continuous incubation was carried out to investigate biofilm biota and the structure through a scanning electron microscope. From these experimental results, the authors presented a new reaction rate equation of acetate decomposition.

Sixth International Congress on Rock Mechanics, September 1-3, 1987, Montreal, Canada

Microseismicity Induced by Deep Coal Mining Activity

Yoji ISHIJIMA, Yoshiaki FUJII, Kazuhiko SATO"
Department of Mineral Resources Development Engineering
Faculty of Engineering, Hokkaido University
" Department of Geotechnology, Muroran Institute of Technology

Three case studies on the microseismic activites occurring in deep coal mining panels are presented with their interpretations. It was clarified from observation that the sequence of the seismic activities which can be represented by the change of the seismic energy release rate is substantially influenced by the geometry of excavations that change daily with mining activity.

A simulation model was developed to evaluate the stress distribution and the strain energy release rate which is defined as the total strain energy released from the newly fractured areas during the unit face advance of the minig front.

Since this energy release rate was revealed to be in good correlation with the observed seismic energy release rate for each case study, the newly developed model could be applicable for interpretations and to anticipate the fracturing phenomena occurring around the excavation.

Sixth International Congress on Rock Mechanics, September 1-3, 1987, Montreal, Canada

Tunnel Excavation by Combination of Static Demolisher with Slit Cut Drilling

K. FUKUDA, H. KUMASAKA
, Y. OHARA, Y. ISHIJIMA
Simizu Construction Co. Ltd.
Department of Mineral Resources Development Engineering
Faculty of Engineering, Hokkaido University

On the basis of linear fracture mechanics, a tunnel excavation method by a combination of static demolisher with slit cut drilling was designed by giving due consideration to the effect of in-situ stresses. Several types of slit patterns were studied for their effectiveness based on the strength of numerical analysis, laboratory experiments and a few experimental excavations in a in situ rock mass in an attempt to propose an appropriate design plan for tunneling in underground formations.

Proceedigs of International Water Jet Symposium Beijing, CHINA, September 9-11, 1987

Water Jet Drilling for Large Diameter Stress Relief Borehole in Coal Seams

Kotaro OHGA and Kiyoshi HIGUCHI
Hokkaido University, Sapporo, Japan

Summary

Is this report, the results of large diameter drilling tests in coal seams assisted with water jets are described. The stress relief in coal seams by this new method is as effective as by the conventional method and the penetration speed by this method is 1.5 times as fast as the conventiondl methods.

Proceedings of The 3rd U. N. Mine Ventilation Symposium Pennsylvania, U. S. A., Octorber 12-14, 1987

The Practice of Methane Drainage in Japan

K. OHGA and K. HIGUCHI
Sapporo, Japan

Summary

Japan has produced 14-16 million tons of coal per year for these several years. About half of the production come from eight coal mines in Ishikari coal field, Hokkaido. Most of gassy coal mines in Japan in this field and the average mining depth of these coal mines has already attained about 700 m from the ground surface. Therefore, most of there coal mines have suffered from the occurrence of coal and gas outbursts. To prevent outbursts and to reduce ventilation air, gas drainage has been carried out at all of these coal mines with successful results. But the methods of gas drainage differ from each other according to the coal mines where they are used. In this report the outline and the main methods of gas drainage are described.

The 22nd International Conference of Safety in Mine Research Institute, Beijing, P. R. C., Nov. 2-6, 1987

The Relations between Acoustic Emission and Gas Emission Due to Coal Mining Operations

W. ZHANG, F. MA and X. TU
Fushun Coal Research Institute, Fusun, Liaoning, China

I. NAKAJIMA, M. UJIHIRA and K. OHGA
Hokkaido University, Sapporo, Japan

As a field study on the control of methane concentration in ventilation air, the relations between acoustic emission and gas emission from mining panels were investigated by the cooperation between Fushun Coal Research Institute in China and Hokkaido University in Japan. For practical purposes, acoustic emissions in addition to gas emission in drilling into the side walls of the entries and the long wall of the mining faces were observed tentatively at some coal mines in China and Japan. Moreover, the crack propagations due to mining operations and the possibility of the gas drainage from boreholes drilled into a mining panel were considered on the basis of the above observational results. From these considerations, it was obtained as a concluding remark that gas drainage from borehole was impossible without the occurrence of the acoustic emission activity with the amplitude frequency distribution consisteing of three straight lines broken at two points in a semilogarithmic gragh.

6th International Conference on Surface and Colloid Science, June 5-10, 1988, Hakone, Japan

Interaction of Fluorite-Calcite in Aqueous Solutions

Masami TSUNEKAWA, Takakatsu TAKAMORI and Naoki HABATA

Studies were made on the binary minerals-aqueous solution system using fluorite and calcite. The pH value of the suspension as a function of mixing time, and the concentrations of mineral constituent ions in the supernatant were measured. Flotation tests were carried out using a special apparatus, which was developed to simulate real flotation in a plural mineral system. The results obtained were discussed from a chemical thermodynamic point of view.

In the case of calcite alone and fluorite with calcite, the mineral-liquid system initially approaches the equilibrium state of apparent system closed to air, after which it reaches its equilibrium state with air after a lengthy period. Surface precipitation and/or surface reaction between both minerals and the dissolved mineral constituent ions occurred depending on solution conditions. The flotation characteristics of fluorite or calcite in the mixed minerals system differed from that in the single systems. The difference was caused by the effect of the ionic species derived from both minerals in the aqueous solution, and this was interpreted in terms of the surface precipitation and surface reaction.

3rd Mine Ventilation Symposium, University Park, PA, U. S. A, October 12-14, 1987

The Application of Fuzzy Reasoning to Mine Ventilation Control

Yuusaku TOMINAGA
Facultyof Engineering, Hokkaido University, Sapporo, Japan
Yansheng LIU and Peijian ZHANG
Fuxin Institute of Mining and Technology, Fuxin, China

To keep underground mine ventilation in an adequat condition used in conjunction with an air velocity sensor, a computer and a local fan with thyristor control, fuzzy reasoning is introduced to both algorithms for data transmission and ventilation control. Four methods of data transmission are introduced. Fuzzy reasoning according to the frequency of noise occurrence in underground site is proposed in this study. How to produce an optimum series of linguistic control rules to adjust ventilation in an airway using a computer instead of a mining engineer was shoun.

The 3rd International Conference on Molten Slags and Fluxes, June 1988, University of Strathclyde, Glasgow, United Kingdom

Measurement of Respective Interface in Slag-Metal-Gas Reaction and Kinetic Analysis of Iron Oxide Reduction

Kuniyoshi ISHII and Yoshiaki KASHIWAYA
Department of Metallurgical Engineering, Faculty of Engineering
Hokkaido University Sapporo 060, Japan

Iron oxide in silicate slag was reduced with carbon dissolved iron at 1,450℃ in a thin alumina crucible. The evolved gas was monitored by quadrupole mass spectrometer and also aspects of the reaction interface were observed by X-ray fluoroscopy. Then the respective interfaces such as metal-slag, and gas-metal could be measured by using a computer aided image processor.

In the all experiments, CO_2 was detected in the evolved gas and oxygen potentials which were calculated from the values of CO/CO_2 closed to those of slags. Because the variations of slag-gas interfacial area were similar to the profiles of gas evolution, it was suggested that slag-gas interface mainly raled the rate of reduction.

The First Hokkaido University-Beijing University of Iron and Steel Technology Seminar on Metallurgical Engineering, Sapporo, Aug. 30 -Sep. 1, 1987

Transition from Columnar to Equiaxed Crystals for Alloy Ingots

Masayuki KUDOH, Tadayoshi TAKAHASHI and Tatsuya OHMI
Department of Metallurgical Engineering, Faculty of Engineering
Hokkaido University, Sapporo, 060 Japan

The transition from columnar to equiaxed crystals was examined for two different types of ingots on the basis of the macrostructure and cooling curves. The transition occurred when the growth of columnar dendrites was delayed in spite of the increase in supercooling, and crystallization occurred in the supercooled region in front of the columanar dendrites due to a temporary increase in the cooling rate. This shows that solidification proceeds discontinuously. Furthermore, the fine crystals in the front of the columnar zone formed when the supercooled region was extended in the neigborhood of the inner walls of the mold.

Next, the refinement of equiaxed crystal and extension of the equiaxed region were attempted by duplex casting, which was established on the basis of the results described above.

The First Hokkaido University Beijing University Joint Iron and Steel Technology Seminar on Metallurgical Engineering, Sapporo, Aug. 31-Sept. 1, 1987

Process for Enhancing Undercooling of Molten Steel

Tadayoshi TAKAHASHI, Ken-ichi OHSASA and Jun-ichi TANAKA
Department of Metallurgical Engineering, Faculty of Engineering,
Hokkaido University, N-13, W-8, kitaku, Sapporo 060 Japan

A process was developed to enhance the undercooling of molten carbon steel by controlling the heterogeneous nucleation catalysts by an addition of rare earth metal (REM). Molten steel of a substantial mass, processed for enhanced undercooling was readily undercooled even with comparatively smaller cooling rates. A chemical analysis showed that REM components did not exist in the ingot with REM addition except for the surface layer of the ingot. Furthermore, a number of nonmetallic inclusions decreased due to REM addition. It is considered that inclusions, which are active as nucleation catalysts, are changed into other compounds which are inactive as nucleation catalysts and are attracted to the inner wall of aluminia crucible by the interaction between REM components in the melt and the crucible wall because the active catalysts are removed from melt.

The First Hokkaido University-Beijing University joint Iron and Steel Technology Seminar on Metallurgical Engineering, Sapporo, Aug. 31-Sept. 1, 1987

Production of Functional Fine Precious Metal Powders

Hiromichi KIUCHI, Tadao NAGAI and Takashi MURAKAMI

Hydrogen pressure reduction of aqueous salt solution of gold, silver and platinum group metals were studied under various reduction conditions. Hydrogen pressure, reduction temperature, agitation speed and metallic salt concentrations in an autoclave were found to have significant effects on the particle shape and size distribution.

This paper describes th optimum conditions to obtain fine metal powders wiich seem to be a prerequisite for thick film printing.

The Fourth Japan-China joint Symposium on Science and Technology of Iron and Steel, Kobe, Japan, November 26-27, 1987

Control of Solidification Structure for an Alloy Ingot

Tadayoshi TAKAHASHI and Masayuki KUDOH
Dept. of Metallurgical of Engineering, Faculty of Engineering,
Hokkaido University, Sapporo, 060 Japan

The transition from columnar to equiaxed zones in the ingot solidification of Al−3 mass%Si alloy was examined on the basis of macrostructure and cooling curve. It is considered that the transition occurs when the growth of columnar dendrites is delayed and the equiaxed crystals occur in the deep and enlarged undercooled region in the immediate area preceding the columnar dendrites.

Next, in order to ascertain the transition mechanism, a primary solidifying metal of Al−3 mass%Si alloy was added to the secondary pure aluminum molten metal of a lesser volume. The equiaxed crystals became finer with increasing time intervals between the pourings of primary and secondary molten metals, because the undercooled region was enlarged preceding the columnar zone, by the pouring of the secondary molten metal.

5th Japan Institute of Metals International Symposium, Kyoto, Japan, March 14-17, 1988

Statistical Numerical Approach to Metastable State and Non-Equilibrium State

T. MOHRI, J. TSUTSUMI and K. WATANABE
Department of Metallurgical Engineering Hokkaido University,
SApporo 060, Japan

The Cluster Variation Method (herein after CVM), in which a wide range of atomic correlation functions can be incorporated into a free energy functional, has been uas employed to analyze the equilibrium state of a system.

For the analysis of non-equilibrium state, however, the perturbation expansion is not feasible. Instead, time dependent function must de introduced. We have been attempting this by employing Kikuchi's Path Probability Method (herein after PPM), in which the grand potential of the CVM is replaced by the path probability function which is an explicit function of time.

By combining the CVM with the PPM, we attempted a synthetic study of phase equilibrium, metastability and time evolutional process of an fcc binary system.

The First Hokkaido University Beijing University Joint Iron and Steel Technology Seminar on Metallurgical Engineering, Sapporo Aug. 31-Sept. 1, 1987

Effects of Prestrain on the Red Shortness of Plain Carbon Steel

Y. ITOH and K. MATSUBARA
Fauculty of Engineering, Hokkaido University, Sapporo 060, Japan

Steel ingot usually undergoes a small amount of plastic strain such as thermal strain, in the process of cooling to a hot working temperature after solidification or soaking treatment. This work was conducted in order to investigate whether the small strain, i. e. prestrain, had an influence on the hot ductility of steel.

Tensile specimens machined from a commercial steel rod (JIS S 20 C grade) were solution-treated at 950~1350 °C for 5 min and then loaded at 500~1250 °C.

Part of the specimens were pre-strain ed by pulling at 0.1 mm/sec during cooling after the solution treatment.

The pre-strain resulted in a remarkable decrease of ductility over the temperature range of 550 ~1100 °C, it grain boundary sliding occur ved and led to the formation of voids around precipitated particles on the boundary.

5th International Conference on Numerical Methods in Thermal Problems, Montreal, June 29-July 3, 1987

Monte Carlo Method for Radiative Heat Transfer Analysis of Genaral Gas-Particle Enclosure

Kazuhiko KUDO, Hiroshi TANIGUCHI, Hiroshi HAYASAKA, Takeru FUKUCHI
Department of Mechanical Engineering, Faculty of Engineering,
Hokkaido University, Sapporo 060 Japan

Wen-Jei YANG
Department of Mechanical Engineering and Applied Mechanics
The University of Michigan, Ann Arbor, MI 48109 U. S. A.

Ichiro NAKAMACHI
Tokyo Gas Co., Ltd., Minato-ku, Tokyo 105 Japan

A new Monte Carlo method is developed to analyze multidimensional radiative heat transfer in an enclosure containing gray gas with anisotropically scattering gray particles. One set of variables, called READ, are introduced to represent radiation transfer, thus appreciably reducing

repeated computations required by the conventional Monte Carlo technique. An lm x lm square duct is the enclosure with the upper and lower walls at different temperatures in the one-dimensional case and with adiabatic specular or diffuse side walls in the two-dimensional case. Results agree very well with the existing analytical solutions for one-dimensional, nonscattering cases. It is concluded that with anisotropic scattering, an increase in the absorption coefficient and/or single scattering albedo produces adverse effects on radiative heat transfer. Anisotropic scattering effects cannot be simulated by the use of the effective absorption coefficient.

5th International Conference on Numerical Methods in Thermal Problems, Montreal, June 29-July 3, 1987

Radiative Heat Transfer Analysis in a Forge Furnace

Tsuneaki NAKAMURA, Toshiaki OMORI, Kunio YASUZAWA, Ichiro NAKAMACHI
Tokyo Gas Co., Ltd., Minato-ku, Tokyo 105 Japan

Hiroshi TANIGUCHI
Department of Mechanical Engineering, Faculty of Engineering,
Hokkaido University, Sapporo 060 Japan

A numerical method of radiative heat transfer has been developed to predict the performance of industrial furnaces. This method determines flow pattern, temperature distribution and heat fluxes into heating materials in three dimensional and rather complex geometry. This method consists of three calculating steps. These are the cold flow analysis, the calculation of the total exchange areas and that of the energy equations. This method is applied to predict the performance of a practical forge furnace using two types of burners. One is a conventional gas burner and the other is a ' flat-flame ' burner that forms a flat and fishtail shape flame. The calculation results indicate that the flat-flame burner is superior to the conventional one in terms of uniform heating. A new burner has been designed from the results and tested in a forge furnace and satisfactory results have been obtained.

2nd International Symposium on Transport Phenomena in Turbulent Flows, Tokyo, October 25-29, 1987

Prediction of a Gas-Particle Turbulent Jet with the Fluctuation-Spectrum-Random-Trajectory Model

Jianren FAN*, Kefa CEN, Hua ZHAO
Department of Thermoscience and Engineering,
Zhejiang University, Hangzhou, P. R. China.

Hiroshi TANIGUCHI
Department of Mechanical Engineering,
Hokkaido University, Sapporo, Japan.

A numerical treatment for determining the particle velocity and the trajectories in a two-phase flow is described herein and this new fluctuation-spectrum-random-trajectory (FSRT) model is proposed to account for the turbulent diffusion of particles. It is predicted for the flow of a turbulent axisymmetric gaseous jet laden with spherical solid particles of non-uniform size. The particle velocity and the concentration field are obtained by the revised volume average method. The predictions are compred with experiment.

1st European Conference on Industrial Furnaces and Boilers, Lisbon, March 21-24, 1988

Structure and Flame Holding Mechanism in Boundary Layer Combustion of Coal Plate

Kazuhiko KUDO, Hiroshi TANIGUCHI, Masato OGUMA, Teruyoshi WASHIZAWA
Derartment of Mechanical Engineering, Faculty of Engineering,
Hokkaido University, Sapporo 060 Japan

Wen-Jei YANG
Department of Mechanical Engineering and Applied Mechanics
The University of Michigan, Ann Arbor, MI 48109 U. S. A.

An experimental study is conducted in a combustion wind tunnel to investigate the boundary layer combustion of a flat coal plate under controlled radiative and convective heating. A sub-stable state is established in the flow boundary layer, in which surface combustion of the coal plate and decomposition combustion coexist. The decomposition combustion flame is a combination of premixed and diffusion flame structures having a roll-up profile at the upstream end. Measurements were made on the profiles of velocity, temperature and compositions inside the

boundary layer as well as the distribution of the coal plate temperature. The mechanisms of the flame holding, propagation and extinction are determined. The critical flow velocity of flame blowout is increased with an increase in the air temperature or radiation intensity.

International Conference on Computational Engineering Science, Atlanta, April 10-14, 1988

Advances in Computational Heat Transfer by Monte Carlo Method

Hiroshi TANIGUCHI, Kazuhiko KUDO
Department of Mechanical Engineering, Faculty of Engineering,
Hokkaido University, Sapporo 060 Japan

Wen-Jei YANG
Department of Mechanical Engineering and Applied Mechanics
The University of Michigan, Ann Arbor, MI 48109 U. S. A.

A new concept for radiative heat transfer analysis, named READ, is proposed, which makes it possible to calculate practical problems within reasonable computation time. The READ values can be calculated by the conventional Monte Carlo method and the newly proposed time-saving Radiative Heat Ray Method. Radiative heat transfer through packed spheres are also shown to be able to be calculated by the Monte Carlo method.

SAE International off-Highway & Powerplant Congress & Exposition, Milwaukee, Wisconsin, September 14-17, 1987

Characteristics of Diesel Soot Suppression with Soluble Fuel Additives

Noboru MIYAMOTO and Zhixin HOU
Hokkaido Univ.

Akira HARADA
Hino Motors, Ltd.

Hideyuki OGAWA and Tadashi MURAYAMA
Hokkaido Univ.

Experiments on a large number of soluble fuel additives were systematically conducted for diesel soot reduction. It was found that Ca and Ba were the most effective soot suppressors. The main determinants of soot reduction were : the metal mol-content of the fuel, the excess air factor, and the gas turbulence in the combustion chamber. The soot reduction ratio was expressed by an exponential function of the metal mol-content in the fuel, depending on the metal but independent of the metal compound. A rise in excess air factor or gas turbulence increased the value of a coefficient in the function, resulting in larger reductions in soot with the fuel additives.

High-speed soot sampling from the cylinder showed that with the metal additive, the soot concentration in the combustion chamder was substantially reduced during the whole period of combustion. It is thought that the additive acts as a catalyst not only to improve soot oxidation but also to suppress soot formation. Furthermore, the additives resulted in decreased ignition temperatures and enhanced oxidation of the additive-containing soot.

SAE International Congress and Exposition, Detroit, Michigan, February 29-March 4, 1988

Measurement of Particulate and Unburnt Hydrocarbon Emissions from Diesel Engines

Koji YAMANE, Takemi CHIKAHISA, Tadashi MURAYAMA,
and Noboru MIYAMOTO, Dept. of Mech. Engrg. Hokkaido Univ.

This paper provides information on measurements and measurement techniques for particulate and unburnt hydrocarbon emissions from diesel engines.

A dilution mini-tunnel was used to characterize the effects of the dilution ratio and sample temperature on the total particulate mass and soluble organic fraction (SOF) constituents. Increasing the sample temperature resulted in changes in the polynuclear aromatic hydrocarbon (PAH) constituents in SOF. The SOF was isolated by column chromatography, and the PAH fraction was determined by high performance liquid chromatography (HPLC). Column chromatography with silicagel, an octadecylsilanbonded column, and keeping at high temperatures improved the analytical efficiency of HPLC. The gaseous hydrocarbon in raw exhaust was analysed by GC with FID. The temperature of the sample glass syringe affected measurements of high boiling point hydrocarbon constituents.

Energy-Sources Technology Conference and Exhibition
New Orleans, Louisiana-
January 10-14, 1988

Efficient and Low-Smoke Combustion of Various Low Grade Fuels in High-Speed Small Diesel Engines

T. MURAYAMA, N. MIYAMOTO, T. CHIKAHISA
Hokkaido University, Sapporo, Japan

S. TOSAKA
Hokkaido Institute of Technology, Sapporo, Japan

In low-speed large diesel engines, low-grade or heavy petroleum fuels have long been used as an economy measure. Efficient use of various low-grade fuels have recently become a topic of great concern also for high-speed small diesel engines.

This paper describes and analyzes improvements of the thermal efficiency and smoke emissions by fuel heating and blending with low-viscosity fuels in high-speed diesel engines with a range of low-grade or high-viscosity fuels.

VI International Congress on
Experimental Mechanics,
June 6-10, 1988, Portland,
OG, U. S. A

Photoplastic Stress Analysis Considering Rate Effect

Shigeru TADANO and Hiromasa ISHIKAWA
Department of Mechanical Engineering II,
Hokkaido University, Sapporo, 060 Japan

The possibility as a photoplastic model material of cellulose acetate could be shown from the uniaxial tension test by the authors in a previous paper. In this paper, the stress-strain-optic laws derived from the uniaxial tension test were confirmed precisely under biaxial stress field. Therefore, the empirical formulas considering the influence of strain rate were obtained for the photo-viscoelasto plastic plane stress analysis during the usual static loading. This method was applied to an elasto-plastic problem of a finite plate with a circular hole under uniaxial tension. The distribution of stress and strain, the stress concentration factors in the elasto-plastic region and the development of the plastic region were obtained experimentally taking the rate effect into account.As a result, the stress on the minimum section in a model increased as head speed increased. On the other hand, the distribution of strain, the development of the plastic region and the stress concentration factors were almost never influenced.

VI International Congress on
Experimental Mechanics,
June 6-10, 1988, Portland,
OG, U. S. A

Relation Between Cyclic Creep and Pure Creep

Hiromasa ISHIKAWA and Shigeru TADANO
Department of Mechanical Engineering II,
Hokkaido University, Sapporo, 060 Japan.

The behavor of a pure copper subjected to pure creep and cyclic creep under imposed load is examined at room terperature, and at 200 °C, 250 °C, 300 °C, 350 °C, 400 °C and 450 °C to show the relation between these two kinds of phenomena. The data analysis proposed shows that these two kinds of phenomena are essentially identified, and pure creep can be regarded as the extreme aspect of cyclic creep. The examination of temperature dependency on cyclic creep shows the existence of the critical temperature, over which pure creep governs the material behavior, and then under which cyclic creep comes into prominence.

International Conference on Computational Engineering Science, April 10-14, 1988, Atlanta, GA. U. S. A

Constitutive Modeling of Nonproportional Cyclic Plasticity

Hiromasa ISHIKAWA and Katuhiko SASAKI
Department of Mechanical Engineering II, Hokkaido University

In this paper the authors propose a constitutive model for cyclic plasticity incorporating the motion of the center of the loading surface and the plastic-deformation-induced-anisotropy. The evolution of the center of the loading surface is prescribed here by the Ziegler type of assumption, while an anisotropic yield surface evolution is postulated to describe the hardening due to multiaxiality, considering the fact that the yield surface contracts in the direction of the plastic flow in a two-level or mixed test. The Ramberg-Osgood law is applied to each cyclic loop with respect to the current center of the loading surface. Though the current center of the loading surface can not be measured directly from an experiment, it can be prescribed by the computer simulation based on this model. The stress-strain loop simulated by this model is verified by experiments on type 304 austenitic stainless steel.

American Foundrymen's Society 92th Casting Congress April 24-28, 1988, Hartford, Connecticut, U. S. A.

Strength Evaluation of Cast Iron with Very Small Test Pieces

Toru NOGUCHI
Department of Mechanical Engineering II

An experimental and the theoretical study was made on the influence of test piece diameter on the strength and the scattering in cast irons. Numerous 2 mm and 8 mm diameter test pieces from various cast irons were tested and the results were compared.

The experiment revealed that the mean strength does not vary significantly even in the 2 mm diameter specimens, while the standard deviation increased markedly in flake graphite iron. In spheroidal graphite iron, both the mean strength and the standard deviation are unchanged. Weibull's theory on the size effect does not hold in cast iron.

A new formula derived from the strength theory of bundle of threads explained well the results in flake graphite irons. In spheroidal graphite irons, the strength distribution is caused from the variation of material and there is no statistical size effect.

Proceedings of the 3rd China-Japan International Symposium on Biomedical and Rehabilitation Engineering, Shanghai, China, Nov. 2-4, 1987

Fracture Mechanism of Mechanical Valve Used in a Cardiac Prosthesis

Satoru IGARASHI*, Toshio YUHTA** and Yoshinori MITAMURA***
* Department of Precision Engineering, Faculty of Engineering, Hokkaido University, Sapporo 060, Japan
** Division of Biomedical Engineering, Faculty of Engineering, Hokkaido University, Sapporo 060, Eapan
*** Research Institute of Applied Electricity, Hokkaido University, Sapporo 060, Japan.

Deformation and stress distribution of an annular disc of mechanical valve supported at three points formjng an isosceles triangle and subjected to uniform pressure at the upper surface are calculated by means of the finite element method (FEM). Especially, the position where the maximum principal stress appears, its magnitude and its direction are investigated. These results are compared with the experimental results obtained from the durability tsting (accelerated fatigue testing) and the fracture mechanism of the mechanical valve used in a cardiac prosthesis is considered.

Proceedings of the 6th International Conference on Production Engineering, Osaka, Japan, Nov. 10-12, 1987

On an Active Dynamic Damper Using Permanent Magnets and Its Damping Effect

Satoru IGARASHI, Katsuhisa SHIBUKAWA and Seiji NAKATANI
Faculty of Engineering, Hokkaido University,
Sapporo 060 Japan

A new active dynamic damper using three permanent magnets arranged in a vertical direction repelling each other is proposed to absorb vibration of machine effectively by changing the distance between magnets in such a way as to make the natural frequency of the damper coincide with the vibration frequency of the machine automatically. A trial active dynamic damper using three rare-earth magnets is produced equipping the driving and control unit composed of a ball screw, a stepping motor and a micro computer. The vibration experiments reveal that the trial active dynamic damper has a remarkable damping effect in a relatively low frequency region.

1987 CIRP general assembly
Belgrade, Jugoslavija,
August, 16-19, 1987

Automatic Recognition System for Relative Position of Required Shape in Workpiece Space

T. KISHINAMI and S. KANAI,
Hokkaido University;
H. YOKOUCHI
Muroran Institute of Technology;
H. NOMURA and T. HAYAKAWA,
Japan Steel Works Co. Ltd.

— Submitted by H. TAKEYAMA(1)
Received on February 26, 1987 — Accepted by the Editorial Committee

This paper deals with an automatic recognition system for determining a relative position of a required shape in the workpiece space such as large castings or forgings. The proposed automatic recognition system consists of a five-direction measuring system for obtaining the entire workpiece shape, an automatic recognition processor for determining the relative position of geometric model in the measured workpiece space, and an automatic marking system which put marks on a workpiece for giving the information of reference planes and points. Satisfactory results have been confirmed by some assessment tests.

Key words: Automatic shpe measuring, five-direction measuring, noncontact measuring, automatic pattern recognition, automatic marking system, setup for forgings and castings, CAD/CAM, computer-aided testing.

1987 IFIP W. G. 5.3, Working Conference -Software for Factory Automation-, Tokyo, Japan, October, 19-21, 1987

An Integration of CAD/CAPP/CAM/CAE Systems Based on a Rational Parametric Hyper-patch Model

S. KANAI, F. TANAKA, T. KISHINAMI and K. SAITO
Department of Precision Engineering Faculty of Engineering.
Hokkaido University Kita-ku, Sapporo 060, Japan

Computer integration of CAD, CAPP, CAM, and CAE is being considered seriously by industry, and a large amount of research has been done on it. In order to realize an integration of CAD/CAPP/CAM/CAE, a geometric model called the Cell-Constructed geometric Model (CCM) is proposed. This CCM is a rational Bezier hyper surface model, and it is possible to represent any type of surface (plane, cylinder, cone, sphere and free-formed surface) with the same data

structure and unique interpolation formula. And also a conversion diagram from an analytic surface to a rational Bézier hyper surface, and vice verse has been investigated. It is possible to regard the CAD system as a synthesis process of geometric elements for generating a required geometric model. On the other hand, the CAM system is a decomposing process for decomposing some individual machining surfaces from the given geometric model. Therefore a conversion diagram of the geometric model is very important for the CAD/CAM interface.

In this paper, a conversion process between the rational Bézier hyper surface and the analytic surface, and a conversion from geometric model for the CAD and to FEM model, are analytically investigated. And based on the conversion characteristics, a new computer integration system for CAD/CAM/CAE has been proposed.

1987 6th International Conference on Production Engineering, Osaka, Japan, November, 10-13, 1987

An Application of Voxel Representation ot Machining Simulator

T. KISHINAMI, S.KANAI, H. SHINJOU and K. SAITO

This paper describes a machining simulator based on voxel representation. In order to realize a more high level computer controlled machining system, it is necessary to develop the machining simulation technique which is able to forecast a machining phenomena such as removal shape and cutting force, cutter collision and so on.

Voxel representation was introduced into the machining simulator, which makes it easy to do a logical set operation between objects, and the conversion process from modeling space to voxel space is proposed. Some experimental results of the simulator are also demonstrated.

1987 6th International Conference on Production Engineering, Osaka, Japan, November, 10-13, 1987

Inverse Offset Method for Cutter Path Generation

T. KISHINAMI, T. KONDO and K. SAITO

This paper describes a new cutter path generative method which is based on the proposed Inuerse Offset Method.

The proposed cutter path generative method is available for any tool shape in three dimensional machining.

In this paper, the principle of the inverse offset method, the cutter path generative method based on it, and some experimental results are described.

Key words: cutter path generator, offset operation, three-dimensional machining, inverse offset method, CAD/CAM, NC programming.

Third International Conference on Fusion Reactor Materials October 4-8, 1987, at the Karlsruhe Congress Centre Karlsruhe• F. R. Germany

Defect Structure Development in 14 MeV Neutron Irradiated Copper And Copper Dilute Alloys

Y. SATOH, I. ISHIDA, T. YOSHIIE and M. KIRITANI*
Department of precision engineering, Faculty Engineering,
Hokkaido University, Sapporo 060, Japan
* Department of Nuclear engineering, Faculty of Engineering,
Nagoya University, Nagoya 464, Japan

Abstract

Copper and twelve different copper base dilute alloys (Ni, Si, Ge and Sn) are irradiated with fusion neutrons from RTNS-II at 300 K-723 K, up to 6×10^{22}n/m^2. Roles of free defects are detected by the comparison of defect structures irradiated as thin foil and those as bulk, and the analysis on defect structure in pure copper gives 10 keV as sub-cascade energy. The direct formation of vacancy clustered defects from cascade damage is enhanced by oversized solutes. Oversized solutes as well as undersized solutes enhance the formation of the interstitial type dislocation loops by reducing the interstitial mobility and the stabilizing the loop nucleus. Existance or non-existance of dislocation loop formation near a dislocation gives a good criteria

of the bordering condition for the loop formation. Well grown voids are observed in pure copper at 563 K, but they are not formed in all the alloys of 2 at.%.

Third International Conference on Fusion Reactor Materials October 4-8, 1987 at the Karlsruhe Congress Centre Karlsruhe• F. R. Germany

Evolution of Defect Structures in Copper by He^+ Ion Irradiation Under the Control of Free Point Defects

I. ISHIDA[1], T. YOSHIIE[1], S. SASAKI[2], S. IWASE[2], T. IWATA[2] and M. KIRITANI[3]

[1] Department of Precision Engineering, Faculty of Engineering, Hokkaido University, Sapporo 060, Japan

[2] Department of Physics, Japan Atomic Energy Research Institute, Tokai-mura, Ibaraki-ken 319-11, Japan

[3] Department of Nuclear Engineering, Faculty of Engineering, Nagoya University, Nagoya 464, Japan

The role of free interstitial atoms and the effect of implanted helium were studied by the comparison of the defect structures developed in masked thin foils and in bulk samples of copper by 500 keV He^+ ion irradiation at room temperature. The proportional increase of the number of stacking fault tetrahedra (SFT) in thin foils to a low fluence gives a minimum PKA energy of 23 keV for cascade damages to form a SFT. The mechanism of defect saturation at higher fluence is analyzed from the reaction of free interstitials. Point defects remaining as clusters in the bulk specimen are much less at the depth without helium atom and are much more at the depth with helium atoms than those in the masked thin foils. The depth variation of the interstitial type dislocation loops observed in the bulk are understood when one considers the flow of interstitial atoms whose motion is suppressed by the increase of the ratio of helium atoms to the free point defects.

Third International Conference on Fusion Reactor Materials October 4-8, 1987 at the Karlsruhe Congress Centre Karlsruhe• F. R. Germany

Defect Structure Evolution From Cascade Damage in 14 MeV Neutron Irradiated Nickel and Nickel Alloys

S. KOJIMA, T. YOSHIIE and M. KIRITANI*
Department of Precision Engineering, Faculty of Engineering.
Hokkaido University, Sapporo 060, Japan
* Department of Nucler Engineering, Faculty of Engineering.
Nagoya University, Nagoya 464, Japan

Abstract

D-T neutron irradiation of nickel and 4 nickel based 2 at.% alloys were performed using RTNS-II at 300 K-700 K up to 10^{23} n/m^2. Roles of free point defects were detected by the comparison of defect structures irradiated as thin foil and those as bulk. The analysis of vacancy clusters in thin foil nickel gives the average distance between sub-cascades to be 10 nm and 14 keV as sub-cascade energy. In bulk, interstitial loops were formed, and the major clustered defects in nickel at the lower temperatures were stacking fault tetrahedra and voids at the higher temperatures, which reflects the variation of the stability of tetrahedra with temperature. Under-sized solutes (Si) and extremely over-sized solutes (Sn) enhanced the formation of loops in matrix, whereas moderately over-sized solutes (Cu, Ge) enhanced the formation of loops near dislocations. In the latter case, voids were observed since free point defects can diffuse in long range.

Third International Conference on Fusion Reactor Materials, October 4-8, 1987 at the Karlsruhe Congress Centre Karlsruhe • F. R. Germany

Mechanical Property Change and Defect Structures of Ni and Fe Irradiated with Fission and Fusion Neutrons

A. OKADA, K. KANAO, Y. SATOH, S. KOJIMA
T. YOSHIIE and M. KIRITANI*
Department of Precision Engineering, Faculty of Engineering
Hokkaido University, Sapporo 060, Japan
* Department of Nuclear Engineering, Faculty of Engineering
Nagoya University, Nagoya 464, Japan

The correlation between the fission and 14 Mev D-T fusion neutron irradiation effects on the mechanical property change was discussed for Ni and Fe with reference to the defect structures induced by the irradiation. In Ni inrradiated with fission and fusion neutrons at 470 K, no significant difference in size distribution was found in the defect structures of small SFT and dislocation loops except for the absolute value of their number density, and the dependence of the change in the yield stress on the defect number density is the same. In irradiations at higher temperatures, 720 K in RTNS-II irradiation and 670 and 770 K in Joyo irradiations, the dominant defect clusters are SFT in RTNS-II, and voids in Joyo irradiation. The difference in the amount of the yield stress increase for the same defect number density is understood from the difference in the defect cluster species. The dependence of the yield stress on the fluence in Fe was discussed on the basis of the results of Ni.

Third International Conference on Fusion Reactor Materials, October 4-8, 1987 at the Karlsruhe Congress Centre Karlsruhe • F. R. Germany

Detection and Analysis of Microscopically Invisible Cascade Defects in 14 Mev Neutron Irradiated Aluminum and Iron

T. YOSHIIE[1], Y. SATOH[1], H. TAOKA[1], S. KOJIMA[1] and M. KIRITANI[2]
[1] Department of Precision Engineering, Faculty of Engineering. Hokkaido University, Sapporo 060, Japan
[2] Department of nuclear Engineering, Faculty of Engineering, Nagoya University, Nagoya 464, Japan

Experiments to detect damage created by cascades in aluminum and iron, in which no defect structures have been observed by electron microscopy are designed by effectively combining 14 MeV neutron irradiation with electron irradiation damage by a high voltage electron microscope. The shrinkage and annihilation of interstitial loops formed by electron irradiation by subsequent neutron radiation was most marked in aluminum and but occurred to some degree in iron. The result is explained by a simple model of diffusion of vacancies and interstitials based on the difference of the initial distribution profile between the two kind of point defects in a cascade. The extent of the annihilation of neutron radiation induced defect clusters in iron formed at room temperature is detected by the variation of the interstitial cluster formation at 323 K by high energy electron irradiation. Two annealing stages of 523 K-573 K and 573 K-623 K are observed.

This paper was presented at 1987 IEEE Industry Applications Society Annual Meeting in October, 1987 (at Atlanta, U. S. A.).

PWM Current Source Rectifier with Sinusoidal Line Current

Shoji FUKUDA and Noboru TAKADA
Department of Electrical Engineering, Hokkaido University

This paper describes a novel pulse width modulation (PWM) scheme for a current source rectifier, with which the input line currents of the rectifier can be almost sinusoidal with unity power factor while producing variable amplitude of the dcvoltage.

A performance function (PF) is introduced to take into account of LC filter characteristics inserted in the ac line side. Then a performance index which corresponds to the distortion factor of PF is defined. An optimal PWM pattern is mathematically obtained by minimizing the

performance index. In this calculation, the space vector representation of PF is used for treating three-phase quantities as a whole, which results in reducing the number of switchings of devices by around 30% when compared with the conventional scheme. An optimal LC filter design technique is also described. Finally the proposed scheme is implemented with a microprocessor-based system, and its validity is confirmed by experimental results.

This paper was presented at 1988 IEEE Power Electronics Specialists Conference in April, 1988 (at Kyoto, Japan).

PWM Technique for Inverter with Sinusoidal Output Current

Shoji FUKUDA, Hirokazu HASEGAWA and Yoshitaka IWAJI
Department of Electrical Engineering, Hokkaido University

This paper describes a sinusoidal PWM technique suitable for single-chip microprocessor-based control. The proposed scheme can be considered as a digital alternative of the analog subharmonic method (SHM) in the sense that 1) on-line real time PWM control is possible, 2) synchronization between carrier wave and signal wave is unnecessary. Furthermore, the scheme has fertures that: the maximum output voltage is 15% higher, and the number of switchings is 30% less than the one obtained by SHM.

PWM pulse creation principle is as follows:
Most inverter loads are of a low-pass filter nature. Taking into account this fact, a performance function (PF), which is a time-integral function of the inverter output voltage, is introduced. An optimal PWM pattern is obtained by minimizing the distortion factor of PF. As the calculation of the optimal pattern reguires only three multiplications, it can be executed on-line with a minimum ROM capacity. An experiment is carried out with an Intel 8096 CPU. The results demonstrate the validity of the proposed scheme.

10th IFAC World Congress
Munich, Federal Republic of
Germany, July 27-31, 1987

Design of Electrical Position Servo Based on Robust Model Matching

T. EISAKA, S. BAI and R. TAGAWA
Department of Electrical Engineering, Hokkaido University,
Sapporo 060 Japan

This paper treats th evaluation of a new robust control design method named ' Robust Model Matching (called RMM for short)' by applying it to the design of elctrical position servos. RMM is a practical method for the control of plants with wide parmeter variations. However, the effect of RMM is not yet sufficiently examined in experiments and simulations. In this paper, RMM is applied to the design of electrical position servos, and is evaluated with simulations and experiments. The results of them show that the electrical position servos designed by RMM can eliminate the undesirable influences of: (1)load variations, (2)torque disturbances, (3)nonlinear friction, (4)dead zone in a power amplifier, and (5)uncertainty of a velocity sensor's output signal ; upon controlled variables.

IEEE/PES 1987 Summer
Meeting, San Francisco, U.
S. A., July 12-17, 1987

New Approach to the Steady State Stability Analysis of Synchronous Machines

J. TAMURA*, T. MURATA*, I. TAKEDA*, J. HASEGAWA and H. FUJIWARA
Depertment of Electrical Engineering, Hokkaido University,
Sapporo 060, Japan
* Kitami Institute of Technology, Kitami 090, Japan

This paper presents a new method for the steady state stability analysis of synchronous machines. The method is based on a new swing equation, which is a second-order, non-linear differential equation and differs from the swing equation conventionally used. Two steady state stability criteria can be derived by evaluating the eigen values of a linearized version of the new swing equation, one of which is for step-out instability and the other for hunting. Although these two instabilities have mostly been discussed independently so far, this new approach discusses the two instabilities on a common basis.

Tenth International Conference on Magnet Technology, Boston, U. S. A., September 21-25, 1987

Test Plant as the First Step Towards Commercialization of SMES for Utilities

K. HAYAKAWA*, M. MASUDA**, T. SHINTOMI**, and J. HASEGAWA
Department of Electrical Engineering, Hokkaido University,
Sapporo 060, Japan
* Mitsubishi Heavy Industries, Ltd., Kobe 652, Japan
** National Laboratory for High Energy Physics, Tsukuba 305, Japan

The 50 MJ SMES system was proposed here as a test plant which is a first step towards commercialization of a utility size SMES. A coil measuring 5 m in diameter, which is divided vertically into six sections, will be fabricated in a factory, transported and assembled on site. The characteristic feature of the plant is the soft structure which means a bobbinless coil supported by bedrock. One of the purposes of the plant is to accumulate the basic technical data for further SMES plants, for example, fatigue strength of bedrock and so on.

Tenth International Conference on Magnet Technology, Boston, U. S. A., September 21-25, 1987

Design Study of SMES System Using High Temperature Superconductors

T. YOSHIHARA*, M. MASUDA**, T. SHINTOMI** and J. HASEGAWA
Department of Electrical Engineering, Hokkaido University,
Sapporo 060, Japan
* Mitsubishi Heavy Industries, Ltd., Kobe 652, Japan
** National Laboratory for High Energy Physics, Tsukuba 305, Japan

Various studies of high Tc superconductors are being energetically pursued all over the world, since IBM Zurich Research Laboratory reported on the superconducting oxide. A new design using a high Tc superconductor is under study for 5000 MWh, on the assumption that it will be available such as conventional superconductors. Problems related to high Tc SMES system, mainly thermal insulation, refrigeration system, stability of supercoductors, etc., are considered. Some design examples of high Tc SMES system are proposed.

Third IASTED International Conference on High Technology in the Power Industry, Phoenix, U. S. A., March 1-4, 1988

New Type Controller for Load Frequency Control of Interconnected Power Systems

E. TANAKA and J. HASEGAWA
Department of Electrical Engineering, Hokkaido University,
Sapporo 060, Japan

A new type controller for load frequency control of interconnected power systems is presented. This controller consists of integral compensation elements and state feedback loops. By using the controller, not only deviations of frequency and net interchange power but also time deviation and inadvertent interchange can be reduced to zesro without requiring information about tie-lines. This structural feature makes it possible to construct the control system in individual regulating plants instead of in a centralized system control center. Even if some state variables are unavailable, this control system can be operated by utilizing the remainder of state variables and a dynamic compensator. Effectiveness of the controller was confirmed by simulation.

40th Gaseous Electronics Conference American Physical Society Atlanta, Georgia, U. S. A. 12-16 October 1987

Behavior of electron swarms in methane and monosilane (Invited)

H. TAGASHIRA
Department of Electrical Engineering, Hokkaido University,
Sapporo, 060, Japan

The electron swarm behavior in methane and monosilane, important gas materials in plasma CVD for deposition of carbon and diamond thin films, and a-Si : H thin films, respectively, are studied by a Boltzmann equation method developed in this laboratory, in which generation and loss of electrons in a swarm are fully considered, and the electron-molecule collision cross sections are deduced for these gases by consulting experimental swarm data such as the electron drift velocities, diffusion coefficients and ionization coefficient.

Japan-Australia Workshop on Gaseous Electronics and Its Applications, Sydney, Australia 18-22 January 1988

Transient RF discharge in Nitrogen under Plasma Processing Conditions

N. SATO, K. KAMIBAYASHI and H. TAGASHIRA
Department of Electrical Engineering, Hokkaido University,
Sapporo, 060, Japan

Investigations into the RF glow discharge are important since it is widely used in plasma CVD for LSI and solar cell fabrication. However, it should be pointed out that continuous RF discharges are mainly used and use of pulsed discharges is scarce.

In the present paper, a pulsed RF discharge is studied by a computer simulation technique in which a Monte Carlo technique and a continuity-equation-based technique are used in a hybrid manner. It is shown that the discharge power with the pulsed RF discharge increases almost linearly with source voltage, while it tends to saturate with continuous RF discharges.

Japan-Australia Workshop on Gaseous Electronics and Its Applications, Sydney, Australia 18-22 January 1988

Electron Drift Velocity in Non-Conservative Conditions

H. TAGASHIRA
Department of Electrical Engineering, Hokkaido University,
Sapporo, 060, Japan

The study of electron swarms in weakly ionized gases are important since it serves to deduce accurately electron-molecule collision cross sections from swarm data and also electron swarm parameters from collision cross sections.

The present paper deals with problems concerning accurate treatment of electron drift velocities. It is pointed out that there are three stages of problems. The first is exact theoretical interpretation and deduction of the drift velocities. The difference in the observational modes, i. e. the time of flight, pulsed Townsend and the steady state Townsend, must be borne in mind. The second stage is accurated measurement and comparison between theoretical and experimental drft velocities must be done considering the difference in definition. The third stage is where to use which drift velocity in what form, and this problem must de considered fully in future quantitative analysis and simulation of gas discharges.

Japan-Australia Workshop on Gaseous Electronics and Its Applications, Sydney, Australia 18-22 January 1988

Monte Carlo Simulation of RF Glow Discharges for Plasma Processing

A. YOKOZAWA, K. KITAMORI and H. TAGASHIRA
Department of Electrical Engineering, Hokkaido University,
Sepporo, 060, Japan

* Department of Indstrial Engineering,
Hokkaido Institute of Technology, Sapporo,060, Japan

To develop a technique to quantitatively simulate RF glow discharges is important since these discharges are mainly used in plasma CVD for LSI and solar cell fabrication, yet their properties have not been well understood. Since high frequencies are used for the power source and the gas pressure is low, the electron energy distribution is expected not to reach the equilibrium distribution in the discharges and hence the socalled local field approximation in which it is assumed that electron swarm parameters are determded by E/N, E and N being respectively the electric field and gas number density, does not hold. In the present paper, a Monte Carlo method is employed which is free from those restrictions, and it is shown that the technique does work for properly simulating RF glow discharges for the first time.

ESCAMPIG 88 9th European Sectional Conference on the Atomic and Molecular Physics of Ionized Gases Lisbon, Portugal 30 August-2 September

Time and spatial structure of RF parallel-plate glow discharge by Monte Carlo simulation

K. KITAMORI
Department of Industrial Engineering, Hokkaido Institute of Technology,
Sapporo, 006, Japan

H. TAGASHIRA
Department of Electrical Engineering, Hokkaido University,
Sapporo, 060, Japan

For understanding of time-space variations of the structureof rf glow discharges, it is necessary to investigate the behavior of electrons and ions in a highly non-equilibrium region near the

electrodes, i. e. the so-called the sheath region.

In the present paper, we have calculated the time space variations of discharge parameters by a Monte Carlo technique which has an advantage that it can treat accurately even the sheath region.

In the sheath, the discharge parameters show large temporal and spatial variations. Particularly near the electrodes, in spite of the existence of the highest electric field, the electron mean energy decreases, i. e. the electron mean energy is non-equilibrium state against the electric field.

ESCAMPIG 88 9th European Sectional Conference on the Atomic and Molecular Physics of Ionized Gases Lisbon, Portugal 30 August-2 September

Modeling of the transient RF discharge in SiH_4/H_2 mixtures

N. SATO, K. KAMIBAYASHI and H. TAGASHIRA
Department of Electrical Engineering, Hokkaido University,
Sapporo, 060, Eapan

In this report, a transient RF discharge is simulated in order to examine the capability of controlling the electron energy of the RF plasma, which may be one of effective techngque for micro-electronics.

In the simulation, spatio-temporal evolutions of silane and hydrogen radicals due to the discharge development are investigated with various values of the RF source potential using continuity equations for electrons, ions and radicals of both silane and hydrogen.

The results show that the silane radicals are produced mainly during the transient part for the discharge development near the electrodes.

ESCAMPIG 88 9th European Sectional Conference on the Atomic and Molecular Physics of Ionized Gases, Lisbon, Portugal 30 August-2 September

Electron Swarm Parameters in Nitrogen and Monosilane Mixtures

Y. OHMORI, M. SHIMOZUMA* and H. TAGASHIRA**
Department of Electrical Engineering, Hokkaido Polytechnic College,
Zenibaco 3-190, Otaru, 047-02, Japan
* College of Medical Technology, Hokkaido Universioy, Sapporo, 060, Japan
** Department of Electrical Engineering, Hokkaido University, Sapporo, 060, Japan

Electron swarm parameters in nitrogen and monosilane mixtures are studied for E/P_0 from 60 to 300 V cm^{-1} $Torr^{-1}$ by a two term Boltzmann equation method for the steady-state Townsend experiment.

The variation of the ionization coefficient, drift velocity and other swarm parameters are calculated as a function of the partial monosilane pressure k. The emission intensities for the 2-nd positive and 1-st negative band of the nitrogen molecule and for Si and SiH from monosilane are also calculated using emission cross sections. It is shown that these swarm parameters and the emission intensities decrease almost monotonically with k.

9th European Sectional Conference on the Atomic and Molecular Physics of Ionized Gases, Lisbon, Portugal, August 30-September 2 1988

Development of an electron swarm in krypton at high E/N values: Boltzmann equation analysis

H. DATE
College of Medical Technology, Hokkaido University,
Sapporo 060 Japan
K. KITAMORI
Hokaido Institute of Technology, Sapporo 006 Japan
Y. SAKAI and H. TAGASHIRA
Department of Electrical Engineering, Hokkaido University,
Sapporo 060 Japan

Time-of-flight (TOF) parameters of an electron swarm in krypton at relatively high E/N at which ionisation occurs considerably were analyzed by a Boltzmann equatioin method. A technique of expansion of the electron velocity distribution function in terms of density gradient and

spherical harmonics was employed for the numerical solution of the Boltzmann equation.

It was found that transvrse and longitudinal diffusion coefficients, D_T and D_L are influenced by spatial nonuniformity of ionisation frequency in a swarm at high E/N significantly.

GD 88 International Conference on Gas Discharge and Their Applications, Venezia, 19-23 September, 1988

Electron Swarm Parameters in Nitrogen and Methane Mixtures

Y. OHMORI, M. SHIMOZUMA* and H. TAGASHIRA**
Department of Electrical Engineering, Hokkaido Polytechnic College,
Zenibaco 3-190, Otaru, 047-02, Japan
* College of Medical Technology, Hokkaido University, Sapporo, 060, Japan
** Department of Electrical Engineering, Hokkaido University, Sapporo, 060, Japan

Electron swarm parameters in nitrogen and methane mixtures are important since these mixtures have been used in studying electrical breakdown processes by image converter-intensifier systems and also they are possible candidates for mixed gas insulation of high voltage equipments.

In the present study, the electron swarm parameters in these gases are deduced by a Boltzmann equation method, in which the effect of ionization is considered, for the steady state Townsend condition and the results are compared with experimental data, if any. It is shown that the present ionization coefficient agrees very well with experiment. The electron drift velocity, diffusion coefficient, excitation coefficient to $C^3\Pi u$ of the nitrogen molecule, mean energy and electron energy distributions are calculated and discussed.

GD 88 International Conference on Gas Discharge and Their Applications, Venezia, 19-23 September, 1988

Energy distribution function in rf parallel-plate glow discharges by Monte Carlo model

K. KITAMORI
Department of Industrial Engineering, Hokkaido Institute of Technology, Sapporo, 006, Japan

A. YOKOZAWA, H. TAGASHIRA
Department of Electrical Engineering, Hokkaido Uojversity, Sapporo, 060, Japan

Low pressure glow discharges are used widely for plasma CVD and plasma etching of semiconductor materials. In the present paper, we have developed a simulation technique of rf glow discharges based on a Monte Carlo method, which can accurately and self-consistently predict the structure of glow discharges and discharge parameters such as the electron and ion densities, the electron and ion energies and the electric field. By means of the present technique, the energy distributions of electrons and ions in an rf glow discharge have been calculated for a model gas, and the results are discussed in terms of the Maxwellian and the Druyvesteyn distributions. It is shown that the electron energy distributions both in the sheath and the bulk are not simply Maxwellian.

GD 88 Dnternational Conference on Gas Discharge and Their Applications, Venezia, 19-23 September, 1988

Transient RF Plasma Discharge in SiH_4/N_2 Mixtures

N. SATO, K. KAMIBAYASHI and H. TAGASHIRA
Department of Electrical Engineering, Hokkaido University, Sapporo, 060, Japan

Characteristics of the transient RF discharge in SiH_4/N_2 mixtures under plasma processing conditions are investigated by computer simulation using a continuum model.

Evolution of space charges and radicals, and relation between E_{max}/p and the source potential are obtained for the model of both a resonant and a non-resonant electric circuits.

It is shown that excited species are produced mainly in the cathode fall. The results are compared also with those of the steady RF discharge.

9th International Conference on Gas Discharge and their Applications, Venezia, Italy, September 19-23 1988

A simulation of discharge development in rare gas halide excimer laser mediums

H. DATE
College of Medical Technology, Hokkaido University, Sapporo 060, Japan

K. KAKIZAKI, Y. SAKAI and H.TAGASHIRA
Department of Electrical Engineering, Faculty of Engineering, Hokkaido Universioy, Sapporo 060, Japan

In the medium of discharge excited excimer lasers, many kind of reaction processes for electrons and excited atoms may occur significantly, since high-pressure-gas mixtures with electron attaching molecules are used.

In this paper electron swarm parameters in KrF laser mediums are obtained using a Boltzmann equation analysis, and concentrations of excited species and electrons are estimated as a function of time by solving rate equations. It is shown that the metastable Kr affects the ionisation frequency significantly, and discharge instability which may occur at the end of excitation action is caused by the depletion of halogen. The criterion value of the electron density which leads to glowto-arc transition is discussed also.

MIAMI TECHNICON '87, Miami, Florida, U. S. A., Oct. 28-30, 1987

Quasi-Static Boundary Element Analysis of a TEM Cell with Conducting Loads

Yasuhiro TANAKA and Toshihisa HONMA
Department of Electrical Engineering, Faculty of Engineering, Hokkaido University, Sapporo 060, Japan

A boundary element formulation is presented for the analysis of a transverse electromagnetic (TEM) cell with a conducting load. The conductive load represents a piece of equipment under test (EUT) in a TEM cell. The problem is reduced to a two-dimensional quasi-static alalysis of the cross-section under several assumptions. A surface integral equation equivalent to the reduced governing equation is then developed. This integral equation is approximated by using mixed boundary elements which consist of both constant and linear elements.

The mixed boundary element makes the boundary element modeling of the conductive load

and its formulation very easy without any additional procedure and also efficiently implementable on a digital computer. In addition, it is available to the boundary element modeling on multi-conductors (electrically floating) and/or arbitrary shapes of cross sections.

It was (previously) shown that we can successfully perform the analysis of the TEM cell with an idealized conductive load without any difficulty. The validity of the present work was shown by a similar result as the measured data. The numerical data will be more useful and reliable for a smaller cross-sectional dimension of the EUT, since a smaller EUT (possible in reality) will better meet the necessary assumptions for this quasi-static analysis. Other numerical methods such as the moment method and the finite element method naturally, may be capable of solving the problem. However, the introduction of complicated numerical procedures should be done in order to overcome the floating potential problem.

The present method could be applicable to more realistic analysis where a lossy EUT are taken into account, but the boundary equation should be formulated in a different fashion.

International Conference on Computational Engineering Science, Atlanta, Georgia, U. S. A., April 10-14, 1988

Numerical Study on Transient Boundary Element Solution of a Three-Dimensional Convection-Diffusion Equation

Yasuhiro TANAKA and Toshihisa HONMA
Department of Electrical Engineering, Faculty of Engineering,
Hokkaido University, Sapporo 060, Japan

Transient boundary element solutions of a three-dimensional convection-diffusion equation are presented. In the present boundary element formulation, mixed boundary elements are employed, and the advantages have been previously shown in three-dimensional steady-state problems by the authors. Numerical stability and accuracy are summarized through the numerical experiments for a number of Courant and Diffusion numbers. The authors introduce a semi-analytical integration, in which the singularity in time is evaluated analytically and the other time-spatial integrals are calculated numerically using the Gaussian quadrature rule, because it is very difficult to numerically evaluate the boundary integral involing the kernel function and its associated term.

Accurate solutions near the outlet of the flow are obtained in spite of coarse modeling. Nevertheless, most solutions are not in good agreement with exact solution, dissimilar to the two-dimensional analysis. This discrepancy may be caused not from the semi-analytical procedure, but by the boundary data approximation at the inlet surface and the numerical evaluation of singular integrals. Through various numerical experiments as a function of Courant and Diffusion numbers, stable and accurate solutions were obtained for comparatively large Péclet numbers.

Also it was observed that the numerical property of boundary element solutions are almost the same as in two-dimensional results. It can be concluded that the present method is applicable to engineering analysis of three-dimensional convecion-diffusion equation.

International Conference on Computational Engineering Science, Atlanta, Georgia, U. S. A., April 10-14, 1988

Boundary Element Analysis of MHD Equilibria of Toroidal Plasmas with Free Boundaries

Masanori TSUCHIMOTO, Toshihisa HONMA, Shigeo YATSU
and Tatsuo KASAHARA
Department of Electrical Engineering, Faculty of Engineering,
Hokkaido University, Sapporo 060, Japan

In the analysis of magnetohydrodynamic (MHD) equilibria of toroidal plasmas, we are compelled to use numerical methods because of the non-linear governing equation. For an analysis of a field reversed configuration (FRC) device, the problem is reduced to solve the Grad-Shafranov equation with free boundaries, which has been studied by many authors.

So far we have been studying MHD equilibria fixed boundary problems by using boundary element method (BEM).

In this paper, we solve a free boundary problem for a model of a FRC device, and have obtained solutions with an iteration method.

International Symposium on Fusion Nuclear Technology, Tokyo, Japan, April 10-15, 1988

A New Boundary-Element Modeling to Heat-Transfer Problems in a Solid-Liquid Region of a Blanket

Yasuhiro TANAKA, Toshihisa HONMA and Masanori TSUCHIMOTO
Department of Electrical Engineering, Faculty of Engineering,
Hokkaido University, Sapporo 060, Japan

Recently, numerical engineering analysis by the boundary-element method (BEM) has been developed rapidly and its usefulness has been recognized as well as other numerical methods such as the finite-difference and the finite-element method. However, it is still very difficult to solve a convective heat-transfer problem using the BEM except for constant convection, and also a heat problem in multimedia composed of the two phases of solid and liquid such as in a blanket. In order to apply the BEM to such a complicated problem, to introduce the method of sub-regions may be the most popular boundary-element modeling. In this technique, the whole region is partitioned into the solid blanket regions governed by the diffusion equation and the liquid-metal (fluid-flowing) regions described by the convective diffusion equation. This method has some

advantages. Among them, the resultant coefficient matrix of the system can be transformed to a banded structure. Unfortunately, it is seen that this method does not give quite accurate solutions, because of point-to-point coupling conditions at the interface. For this reason, it is hoped to introduce a more effective boundary-element modeling and formulation.

In this work, the authors propose a new boundary-element modeling to effectively solve a heat-transfer problem in a blanket cooling system constructed of a solid-liquid region. This will be the first prototype of the boundary-element modeling appied to a blanket heat-exchange problem in fusion nuclear design. For the sake of simplicity, our discussion is restricted to a linear steady-state problem. To formulate the problem unifiedly without sub-dividing the domain of the problem, we shall consider the convective diffusion equation, which describes a fluid region, as the diffusion equation (i. e. Poisson's equation) with an additional inhomogenious term (the convective term).

Hence, we can treat the solid-liquid heat-transfer problem in terms of only the Poisson's equation with the non-linear inhomogeneous term.

The main advantages are as follows: i) the heat-flux across the interface is implicitly satisfied in the sense of conservation, ii) the flow velocity profile can be easily modeled, and iii) all the boundary integrals can be analytically evaluated because of the harmonic (Laplacian) field. Due to this nonlinear term, however, we may have finally an integral equation associated not only with the surface, but also with the (fluid-flowing) domain where the tempetature is unknown. So we may be forced to introduce an iterative scheme to solve the non-linear integral equation.

In order to apply the method to a thermal design problem in a nuclear fusion reactor vessel, we will deal with a simple two-dimensional model of a heat-transfer problem in a blanket. Thermal distributions of several cases are shown as a function of the spatial profile of the heat generation rate in the blanket and the velocity profile of a cooling liquid-metal passing through heat pipes. Their numerical results are physically reasonable in spite of a rough numerical modeling, thus that the validity of the present method is revealled. It is concluded that further application of this kind could be available in nuclear fusion research.

16th International Symposium on Space Technology and Science, Sapporo, Japan, May 22-27, 1988

Boundary Element Analysis of Coaxial Gun Plasma in Electric Propulsion Devices

Masanori TSUCHIMOTO and Shinichi SAWAI
Department of Elecrical Engineering, Faculty of Engineering,
Hokkaido University, Sapporo 060, Japan

Many kinds of rockets, which are called chemical thermal rockets, have been used since the middle of the 20 th century. Usually their driving force is obtained burning fuels, so that they gain the order of 10^3 (m/s) in the thrust velocity. However, we cannot produee higher velocities than

10^3 due to the upper limit of the thermal temperature when burning fuels.

On the other hand, if the electric propulsion is used in space craft, then gases are accelerated by the electromagnetic force without considering the thermal limit and it will be possible to gain the thrust velocity more than 10^5 (m/s). However the electric propulsion is unsuitable for the case when enormous thrust power is required when moving outside the earth gravity ; rather electric propulsion is more suitable for interplanetary space travel.

A coaxial plasma gun is one of electromagnetic propulsion devices. Plasmas are generated by the discharge between coaxial electrodes and are accelerated by the Lorentz force with the discharge current and the magnetic fields. Then it becomes important to analyze the plasma behavior and the transient process of plasma production.

Macroscopic phenomena regording the plasma behavior in a coaxial plasma gun are described as a convective diffusion equation. Domain type methods such as finite difference method and finite element method have been found in which we can directly take account for both convective and diffusion terms in the fundamental solutions of the adioint equation and obtain stable solutions for the large Peclet number over the stability condition used in the domain type method.

In this paper, therefore, we try to analyze both the steady and unsteady convective diffusion equation by using mixed boundary element method (M-BEM) to study the coaxial gun plasma.

In order to study the coaxial plasma gun as an electric propulsion devices, we have presented the 3-dimensional model whose governing equation can be expressed by the unsteady-state convective diffusion equation with a constant flow velocity.

In the analysis, we have solved both the steady and unsteady equations by using M-BEM, so that numerical results are summarized as follows :

(1) We have stable M-BEM solutions for the large Peclet number.

(2) M-BE solutions have second-order accuracy.

(3) From numerical experiments, we obtain a new relation between the critical Peclet number and the mesh size to obtain stable stable M-BE solutions for a very large Peclet number.

(4) In the unsteady-state analysis, we have stable M-BE solutions for the Courant number $\geqq$ 1 and the diffusion number $\geqq$ 1/2.

It is found that M-BEM is available for analysis of the coaxial plasma gun as electric propulsion devices. In near future, we will obtain 3-dimensional M-BE solutions for the coaxial plasma gun in the unsteady-state analysis.

International Computer Graphics Symposium October 21-23, 1987 at Sapporo, Japan

Visualization of Electromagnetic Field Distribution

Norinobu YOSHIDA and Inchiro FUKAI
Department of Electrical Engineering, Faculty of Engineering,
Hokkaido University Sapporo, 060 Japan

Recently simulation techniques have progressed throughout various branches of engineering. These are brought about by the increase of capacity of digital computer, especially of Super Computer, handling large quantities of data. The aim of simulation exists in the generalized computation of problems having complicated boundary and medium conditions. Usually, the results of computation may be obtained as variations of fields variables in space and time. The field variation presents much information regarding the mechanisms by which the characteristics of a system are brought about. Since the variations of electromagnetic field cannot be directly observed, appropriate presentation of fields distribution by Computer Graphics provides much instructive consideration. In this report, we present some kinds of expressions of field characteristics in the stripslot directional coupler analyzed by the Spatial Network Method.

1988 IEEE Antennas and Propagation Society International Symposium and URSI Radio Science Meeting at Syracuse University, Syracuse New York, U. S. A, June 6-10, 1988

Transient Analysis of Faraday Effect on Radiated Wave from a Patch Antenna in Magnetized Plasma

Tatsuya KASHIWA, Norinobu YOSHIDA and Ichiro FUKAI
Dept. of Electrical Engineering, Faculty of Engineering
Hokkaido University, Sapporo, Japan

Recently, the analysis of patch antennas in the magnetized plasma is supposed to have the more importance in the space communication. The radiating charcteristics should be analyzed under the unified consideration of the structure of antennas and the medium conditions. We have recently proposed a new numerical method, that is, Spatial Network Method, for transient analysis in three-dimensional space. In this paper, the formulation of the magnetized cold plasma in three-dimensional space and in the time domain by the present method is described. Then, the analysis of a patch antenna in the magnetized plasma is performed. The near field characteristics

of a patch antenna, that is, the effects of the Faraday rotation on the linear polarization of the radiated wave, are shown.

1988 Conference on Precision Electromagnetic Measurements June 7-10, 1988 at Tsukuba, Japan

Transient Analysis of Faraday Effect in a Cylindrical Waveguide Containing Ferrite by Spatial Network Method

Naoya KUKUTSU, Norinobu YOSHIDA and Ichiro FUKAI
Department of Electrical Engineering, Faculty of Engineering,
Hokkaido University Sapporo, 060 Japan

At present, magnetized ferrites are applied to nonreciprocal microwave or millimter wave devices. Thus, a significant amount of studies have been carried out to develop such devices. Recentny, high-speed digital technology has been developed, so that it becomes important to analyze electromagnetic fields on a time domain. And to obtain a more exact evaluation of the properties of these devices, it is necessary to analyze them in a three-dimensional space because of their complicated structures and medium conditions, involving the tensor permeability of the ferrite. Therefore we proposed a new method, that is, the Spatial Network Method, for transient analysis in a three-dimensional space. This report presents the Faraday effect in the cylindrical waveguide filled with the magnetized ferrite using the present method.

15th Annual Conference on the Physics and Chemistry on Semiconductor Interfaces, Asilomar, California, U. S. A., February 1-4, 1988

Control of Fermi level pinning and recombination processes at GaAs surfaces by chemical and photochemical treatments

Hideki HASEGAWA, Hirotatsu ISHII, Takayuki SAWADA,
Toshiya SAITOH, Seiichi KONISHI,
Yali LIU and Hideo OHNO
Department of Electrical Engineering, Faculty of Engineering,
Hokkaido University, Sapporo 060, Japan

* Present Address: Department of Electronic Engineering, University of Electro-Communications, 1-5-1 Chofugaoka, Chofu-shi, Tokyo 182

The effects of surface treatrents, including photochemical oxidation, Na_2S deposition and exposure to various ambients, on Fermi level pinning and recombination processes at GaAs surfaces were studied by measuring the XPS spectra, band edge photoluminescence (PL) intensity and surface current transport(SCT). Computer simulation of the surface recombination process based on the disorder induced gap state (DIGS) model was also made.

Marked increase of PL intensity was observed after both of photochemical oxidation and deposition of Na_2S. However, SCT measurements detected increase of depletion layer width for n-type materials in the dark, indicating deepned or strengthened pinning. Exposure to NH_3 and HCl resulted in reduction in the depletion layer width with slight decrease and marked increase in PL intensity, resepctively. On the basis of the computer simulation, the observed contradictory behavior concerning PL intensity and pinning in photochemical oxidation and Na_2S depostion was explained by shift of pinning towards valence band, possibly caused by generation of fixed negataive charge in insulator. On the other hand, exposure to HCl reduces pinning remarkably.

8th Molecular Beam Epitaxy Workshop, University of California, Los Angels, U. S. A., September 9-12, 1987

Molecular-beam epitaxy growth of GaAs/InAs structures on (001) InP by alternating III/V fluxes

Ryuichi KATSUMI, Hideo OHNO, Hirotatsu ISHII, Ken-ichiro MATSUZAKI, Yuji AKATSU and Hideki HASEGAWA
Department of Engineering, Faculty of Engineering, Hokkaido Universioy, Sapporo 060, Japan

Modified molecular-beam epitaxy in which group V flux is suspended during 1 monolayer (ML) deposition of group III elements, is employed for growth of strained GaAn/InAs superlattices on InP substrates with a GaInAn buffer layer. By the reflection electron diffraction intensity study and x-ray photoelectron spectroscopy, the modification of growth procedure is shown to result in fast formation of a flat growth front without intermixing, which is necessary for superlattice growth. GaAs/InAs superlattice structures grown by the present method are characterized by x-ray diffraction and transmission electron spectroscopy.

Third Biennial OMVPE Workshop, Brewster, MA, U. S. A., September 21-23, 1987

Electrical characterization of OMVPE grown GaAs/InP heterostructures

H. OHNO, S. OHTSUKA, A. OHUCHI and H. HASEGAWA
Department of Engineering, Faculty of Engineering Hokkaido University, Sapporo 060, Japan

Electrical characterization of heterojunction interfaces between lattice mismatched GaAs layers grown on n-InP substrate is presented. This lattice mismatched hetero-structure is reported to be very promising for enhancing the Schottky barrier height of InP, thus make it possible to fabricate high performance depletion-mode InP MESFETs.

Thin GaAs layers of 800 Å were grown on n-type InP substrates ($n=2\times10^{16}cm^{-3}$) by atmospheric pressure OMVPE system with a vertical reactor at 590 ℃. The total H_2 flow was 6 SLM and V/III ratio was 20 with resulting growth rate of 390 Å/min. Al Schottky barriers were formed on the front side whereas ohmic contact was formed on the backside. The Schottky diodes with heterojunction were characterized by I-V measurements as well as by C-V measurements. Thicker GaAs layers ($\sim2\,\mu m$) grown under the same condition on semi-insulating InP substrates were highly resistive.

I-V measurements showed the Schottky barrier heights of 0.59 eV with ideality factors of 1.3, whereas Al dots formed directory on n-InP showed no barrier heights at room temperature. To reveal the electrical characteristics of the heterojunction interface, variable temperature (from 45 k to 300 k) C-V measurements of the diodes with measurements frequency f_M range of 1 KHz to 1 MHz were carried out, and compared to the ideal C-V curve assuming no interface states at the heterojunction. The C-V measurements showed that high densioy of interface state does exist at the heterojunction interface. These states are very fast at room temperature making it impossible to use Terman's method to determine the interface state density using $f_M = 1$ MHz. State density is determined from the low temperature C-V curves and is $10^{12} - 10^{13} cm^{-3}$ above surface Fermi level at $V = 0$. The high density of states, if one cannot remove then by manipulating growth and surface preparation procedures, would make it difficult to fabricate enhancement-mode or inversion-mode FETs using the present structure.

Symposium on Dielectric Films on Compound Semiconductors, Honolulu, Hawaii, U. S. A., October 18-23, 1987

Transient Behavior of Interface State Continuum At InP Insulator-semiconductor Interface

Hideki HASEGAWA, Hiroshi MASUDA, Li HE, Ji-KUI LUO, Takayuki SAWADA** and Hideo OHNO
Department of Electrical Engineering, Faculty of Engineering Hokkaido Universioy, Sapporo 060, Japan

** Present Address: Department of Electronic Engineering, University of Electro-Communications, 1-5-1 Chofugaoka, Chofu-shi, Tokyo 182)

To clarify the drain current drift mechanism in InP MISFETs, an isothermal capacitance transient spectroscopy (ICTS) study of the interface state continuum is made on the anodic Al_2O_3/native oxide/InP MIS system.

Capture behavior is temperature-independent, non-exponential and extremely slow, whereas emission behavior is temperature- and bias- dependent, and is much faster. The observed dehavior cannot be explained by the conventional picture of interface state continuum localized at the interface. It is explained quantitatively by the disorder induced gap state (DIGS) model, recently proposed by the authors, where states are distributed both in energy and in space.

By comparing the transient behavior of interface states with the observed drift behavior of MISFETs, it is concluded that the electron capture by the DIGS continuum is responsible for the drain current drift of MISFETs. This led to a complete computer simulation of the observed current drift behavior.

The 4th International Conference on Solid Films and Surfaces, Hamamatsu, Japan, August 23-27, 1987

Charge-Discharge Dynamics of Disorder Induced Gap State Continuum at Compound Semiconductor-Insulator Interfaces

Li HE, Hideki HASEGAWA, Ji-kui LUO and Hideo OHNO
Department of Electrical Engineering, Faculty of Engineering, Hokkaido University, Sapporo 060, Japan

Based on the recently proposed Disorder-Induced Gap State (DIGS) model for interface states, the charge-discharge dynamics of interface state continuum at insulator-semiconductor (I-S) interfaces are theoretically analyzed and compared with the experiments on InGaAs MIS structures. The concept of occupation boundary used in the analysis clarifies physics involved and simplifies the simulation of complex processes.

By assuming a particular type of DIGS distribution in energy and in space, the observed complex hysteresis behavior and frequency dispersion of MIS capacitance in MIS C-V curves as well as the current drift dehavior of MISFETs are completely reproduced on computer, offering unified understanding of wide varieties of phenomena associated with I-S interfaces.

IV International Workshop on Physics of Semiconductor Devices, Madras, India, December 10-15, 1987

Present Status and Future Trends of High Speed Devices Using GaAs and Related Compounds

Hideki HASEGAWA
Departmnet of Electrical Engineering, Faculty of Engineering Hokkaido University, Sapporo 060, Japan

Present status and future trends of high speed devices using compound semiconductor materials are critically reviewed. Devices include GaAs MESFETs, HEMTs, Heterostructure MISFETs, InP MISFETs, HBTs and quantum electronic devices. Technological issues on speeds and on interface constraints are briefly discussed for future progress.

Symposium on Dielectric Films on Compound Semiconductors, Honolulu, Hawaii, U. S. A., October 18-23, 1987

Effects of Photochemical Treatments on Surface Properties of GaAs

T. SAWADA*, H. HASEGAWA and H. OHNO
Department of Electrical Engineering, Faculty of Engineering, Hokkaido University, Sapporo 060, Japan

(* Present Address: Department of Electronic Engineering, University of Electro-Communications, 1-5-1 Chofugaoka, Chofu-shi, Tokyo 182)

This paper investigates the effects of recently proposed two kinds of photochemical treatments for GaAs surface, i. e., (1) photochemical oxidation in water and (2) photochemical treatment in NH_3, on the surface electronic properties. Band edge photoluminescence (PL), transverse current transport and MIS capacitance-voltage (C-V) measurements were performed.

Photochemical oxidation in water resulted in remarkable enhancement of PL intensity, which was previously interpreted as " unpinning " of surface Fermi level. However, transverse conductance and MIS C-V measurements consistently indicated " strong " Fermi level pinning with increased width of the surface depletion layer. In contrast to this, photochemical treatment in NH_3 using ArF excimer laser resulted in reduced PL intensity accompanied by reduction in the width of the surface depletion layer.

The apparently contradictory behavior between PL and electrical results is explained by a new model involving shift of Fermi level position which controls the effective surface recombination velocity.

Topical Conference on Compound Semiconductor Growth, Processing and Devices for the 1990's (Japan/US Perspective), Gainsville, Florida, U. S. A., October 26-28, 1987

Understanding and Control of Insulator-semiconductor Interfaces for Surface Passivation of III-V Compound Semiconductors

Hideki HASEGAWA
Department of Electrical Engineering, Faculty of Engineering, Hokkaido University, Sapporo 060, Japan

Status of understanding and control of compound semiconductor insulator-semiconductor (I-S) interface is reviewed, including imporance of I-S interface for devices, salient features of I-S interfaces, origin of interface states, microstructure of interfaces and interface control concept. A particular emphasis is laid on the disorder-induced gap state (DIGS) model as a guiding principle for understanding and successful passivation.

4th International Conference on Metalorganic Vapor Phase Epitaxy, Hakone, Japan, May 16-20, 1988

Growth of GaAs/InAs superlattice structures by atmospheric pressure metalorganic vapor phase epitaxy

H. OHNO, A. OHUCHI, S. OHTSUKA,
Y. MATSUBARA and H. HASEGAWA
Department of Engineering, Faculty Engineering, Hokkaido University, Sapporo 060, Japan

GaAs/InAs superlattice structures were grown by atmospheric pressure MOVPE on InP substrates in a vertical reactor using trimethylgallium (TMG), trimethylindium (TMI), and arsine (AsH_3).

To achieve a high degree of thickness controllability by a vertical atmospheric pressure MOVPE system, low temperature growth of GaAs and InAs epitaxial layers in the range of 300 to 450℃ was investigated before growing superlattices. The low substrate temperature is expected to yield a slow growth rate relatively independent of the supply of source material and may even yield an atomic layer epitaxy growth mode, both of which are suitable for growth of fine structures such as GaAs/InAs superlattices.

GaAs showed a saturation of growth rate with respect to the amount of supplied TMG with 0.8 eV activation energy on substrate temperature in accordance with the previous reports suggesting the reaction limited growth. Under alternating supply mode, in which group III sources and AsH_3 were supplied alternatively, growth rate of GaAs was saturated at about one monolayer per cycle at 450℃ with sufficient supply of both TMG and AsH_3. On the other hand excess TMI resulted in hazy morphology of InAs surface even at 350℃ suggesting that TMI decomposes more readily than TMG.

Four monolayer period (2 monolayers each) superlattices were grown on (100) oriented InP substrates under alternating supply mode at 350℃. One period includes 2 cycles of GaAs growth and 2 cycles of InAs growth and takes 130 sec. Growth rate were adjusted to be one monolayer per cycle by controlling 1) group III and group V source supplying duration within a cycle and 2) the concentration of the source material. X-ray diffraction pattern of grown superlattices showed clear satellite peaks indicative of the superlattice structure.

3rd International Photovoltaic Science and Engineering Conference, Tokyo, Japan, November 3-6, 1987

Experimental and Theoretical Analysis of Recombination Process at Semiconductor Surfaces and Interfaces Based on the Unified Disorder Induced Gap State Model

Hideki HASEGAWA, Hitoshi YANO, Toshiya SAITOH,
Yuji YOKOYAMA and Hideo OHNO
Department of Electrical Engineering, Faculty of Engineering, Hokkaido University,
Sapporo 060, Japan

Recombination process at Si, GaAs and InP interfaces are rigorously analyzed self-consistently by computer, using recently proposed DIGS (disorder-induced gap state) model for interface states. Use of the surface recombination velocity or the effective surface recombination velocity, is shown to be, in general, too crude and oversimplified for advanced analysis and design of solar cells. Under certain conditions, it is useful but its magnitude should be rigorously computed on computer. Importance of the charge neutrality level, E_{HO}, of the states is shown.

1988 Electronic Materials Conference, Boulder, Colorado, U. S. A., June 22-24, 1988

Properties of Interface States at Compound Semiconductor Homo- and Hetero-Interfaces

H. HASEGAWA, E. IKEDA, S. OHTSUKA, T. SAITOH and H. OHNO
Department of Electrical Engineering, Faculty of Engineering, Hokkaido University, Sapporo 060, Japan

Except for few selected material systems carefully prepared with perfect lattice matching, formation of semiconductor-semiconductor interfaces generally results in formation of interface states. The origin and properties of these states are not well understood at present, although they may be responsible for varieties of unwanted phenomena including interface recombination and generation, band bending, Fermi level pinning and leakage currents in hetero junctions and quantum well structures.

The purpose of this paper is to study the properties of the interface states at GaAs homo- and hetero- interfaces prepared with varing degrees of growth perturbation at the interface. Slightly lattice mismatched $In_xGa_{1-x}As/GaAs$ ($x=0.02-0.04$) interface, highly lattce mismatched GaAs/InP interface and air exposed regrown GaAs/GaAs interface were formed by a standard vertical MOVPE growth system operated at atmospheric pressure. The properties of the grown interfaces were studied by Schottky C-V, I-V, DLTS, cross-sectional TEM and RBS techniques. A computer simulation program was also developed to analyze terperature and frequency dependence of interface state admittance.

InGaAs/GaAs and air-exposed GaAs/GaAs interfaces showed slightly distorted Schottky C-V curves which were previously interpreted in terms of depletion/accumulation of free carriers. However, detailed measurements indicated temparature and frequency dependent nature of capacitance. Low temperature I-V bahavior non-linear behavior. DLTS responses from these interfaces were small but very broad, being localized near the interface. Schottky diode having GaAs/InP interface showed MIS type behavior with complete carrier depletion in the top GaAs layer. Although room temperature C-V curves resembled ideal C-V curves, low temperature C-V revealed strong Fermi-level pinning. Cross-sectional TEM and RBS study of the interfaces revealed varying degree of lattice disorder and strain near the interface.

It is shown by a detailed computer silumation that all the C-V, I-V and DLTS results can be consistently explained, not by discrete states, but by U-shaped interface state continuum with varying densities but with a common characteristic charge neutrality point. The origin of these states is explained by the disorder-induced gap state (DIGS) model where disorder in the local bonds near the interface produces bonding and anti-bonding interface state continuum in the gap with an invariant charge neutrality point.

First IASC World Conference on Computational Statistics and Data Analysis, Shizuoka, Japan, 17-19 September 1987

A Class of Asymmetrical Metric Functions and its Application to MDS

Y. SATO
Department of Information Engineering,
Hokkaido University, Sapporo, Japan

In two-dimensional Minkowski space, a general class of asymmetrical metric functions was presented. These metric functions are available to analyze the asymmetric dissimilarity data in terms of multidimensional scaling. For sociometric dissimilarity data, the method of multidimensional scaling using such a class of asymmetrical metric function was discussed and the best configuration and the metric function are determined.

Annual Meeting of Classification Society of North America, New York, U. S. A, 16-18 June, 1988

Multidimensional scaling for asymmetric dissimilarities using Randers metric function in Minkowski space

Y. SATO and M. KAWAGUCHI
Department of Information Engineering
Hokkaido University, Sapporo, Japan

Only Randers metric function is known as an asymmetric function which has the convex closed indicatrix in multidimensional Minkowski space. It has been previously shown that Randers metric can be interpreted by a jet stream model.

Using this metric function, minimum dimension analysis which is designated as the method of MDS for grouped dissimilarity data was applied to the alalysis of the friendship relation among the children of an elementary school.

The Second Congress of International Fuzzy Systems Association, Tokyo, Japan, July 20-25, 1987

Fuzzifications of Modal Operators from the Standpoint of Fuzzy Semantics

Tetsuya MURAI*, Masaaki MIYAKOSHI** and Masaru SHIMBO**
* Division of Liberal Arts and Sciences, School of Allied Health Professions, Sapporo Medical College
** Department of Information Engineering, Faculty of Engineering Hokkaido University

The modal logic is extended from classical to fuzzy logic which enables us to express the concepts of necessity, possibility, etc. Ordinary modal concepts are too strict to treat "human" modality, as in the expressions of 'It is almost necessary that...' and 'It is highly possible that...' Such modality plays an important role in the areas of information retrieval and artificial intelligence. This paper presents numerical as well as linguistic fuzzifications of modal operators from the point of view of fuzzy semantics in order to treat the human modality. It also includes an extension of fuzzifications to multi-valued cases.

14th Congress of the International Commission for Optics, August 24-28, 1987, Québec, Canada

Image Recognition by a Displaying System of Three-Dimensional Image Data and its Application to Image Diagnosis of Holographic Under-Snow Radar

Y. AOKI, Y. SAKAMOTO and Y. TAKAHASHI

In this paper a holographic radar system is discussed to detect objects buried under piled-snow. In such an imaging radar image recognition is required with indistinct images, resulting in the diagnosis of radar images. We propose a technique to display three-dimensional radar images for image diagnosis and constructed a system to demonstrate the proposed technique. A grey-level coding method and an image-differential method are proposed. In the former method, the depth information of image is coded into grey-levels, resulting in displaying pseudo-three-dimensional images on a two-dimensional CRT. In the latter method, the differential of image intensities between neighboring boxels is displayed, resulting in displaying the internal structure of the image. An experiment was carried out with the system constructed according to the proposed method, where a microwave with the central frequency of 10 GHz was used to obtain data in the

snow field in winter and image diagnosis was carried out with the displayed three-dimensional radar images.

3rd International Conference on Advanced Robotics ICAR '87, Oct. 13-15, 1987, Versailles, France

---

A Tactile Sensing System Using CT Reconstruction Method

T. KAWASHIMA and Y. AOKI

This paper proposes a two-dimensional tacile sensing system which utilizes a piezo-optical transduction mechanism and a CT reconstruction algorithm. In this system, a pressure distribution is converted into light attenuation projection patterns by a dotted silicon rubber sheet. The two-dimensional pressure distribution is calculated from projection patterns by the back-projection algorithm of computerized tomography. Experimental results show the sensor reconstructs the pressure pattern at 16×16 sensing sites with fewer detectors. The merits and performance of the sensor are presented.

17th International Symposium on Acoustical Imaging, May 31-June 2, 1988, Sendai, Japan

---

Acoustic Characteristics of Snow

M. IKEGAMI, K. TONOOKA and Y. AOKI

This paper is concerned with the reconstruction of ultrasonic imaging under fallen snow. At first we improved the measurement technique of the acoustic attenuation of fallen snow. Using a frequency of 25 KHz and 40 Khz, this technique was applied to many types of snow. These attenuation are nearly equal to that of the human body. Secondly one-and two-dimensional imaging methods are proposed using a noise reduction technique. The noise reduction technique is based on the short period frequency analysis technique. This technique is used because the acoustic reflected signals from objects under fallen snow are so weak, that the reflected signals acquired are mixed with noises.

17th International Symposium on Acoustical Imaging, May 31-June 2, 1988, Sendai, Japan

Display Techniques of Volume Images for Buried Objects in Piled Snow by Acoustical and Microwave Holographic-Radar

Y. AOKI, Y. TAKAHASHI, Y. SAKAMOTO and M. IKEGAMI

An imaging radar of combined techniques with holography by two-dimensional scanning of a hologram plane and frequency sweep with respect to depth direction, produces three-dimensional images, that is volume images. These radar images are reconstructed by processing three-dimensional holographic-radar data collected with acoustical or microwaves numerically. In this paper we propose a display technique of such volume images in order to diagnose images of such a radar. In the proposed display technique we use CG (Computer Graphics) technique, where the stored image data in voxels of a memory system is searched along a view line connected between a point of view and a voxel. If significant data is found along a view line, the searched images data is projected onto the pixels on the screen. Many types of display methods are proposed and demonstrated by computer simulation. Since the imaging radar discussed here is for finding objects buried in piled snow, the proposed display techniques were examined with the real data collected with acoustical and microwaves during the snowy season.

Chinese Computing Seminar 1988, May 26-28, 1988 Singapore

A New Input Method of Chinese Characters and Its Keyboard Arrangement by the Word-Feeling Associaion

Y. AOKI, J. CHEN and K. ONDA

In this paper we propose a new input method of Chinese characters by thd word-feeling association, that is, a method of assignment of Chinese Charaters to alphabetic keys according to the association caused by shapes, meaning and sounds of Chinese characters. Since the number of alphabetic keys of a standard keyboard is limited to about 30, it is necessary to input Chinese characters by a sequence of keystrokes corresponding to the fundamental strokes of writing and radicals of a Chinese character.

In the proposed method we select 19 kinds of fundamental strokes and 72 kinds of radicals considering the priority of frequency of the occurrence of radicals in Chinese characters. The maximum number of keystrokes of our input method is 4 and we estimate that 3 keystrokes are

enough to input 67% of 3755 Chinese characters of the first level according to the proposed method. An experiment is done by Chinese students who tried to input Chinese characters with the keyboard developed by our method. The experimental result shows that the proposed input method is one of the promising input methods of Chinese characters.

The 14th Congress of the International Commission for Optics Quebec, Quebec, Canada, August 24-28, 1987

Nonlinear Susceptibility of Cesium Atom for Lowering Temperature of Parametric Image Upconverter by difference frequency generation

Teruhito MISHIMA
Department of Electronic Engineering, Faculty of Engineering,
Hokkaido University, Sapporo, 060 Japan

Infrared of 10 μm band is important for remote sensing. Conversion of 10 μm image to the visible by parametric image upconversion is promising because of various excellent detectors at the visible wavelength range.

This paper presents a theoretical calculation of the third order nonlinear susceptibility of cesium atom for difference frequency generation to upconvert 10 μm image to the visible. L-S coupling and Doppler broadening are taken into account. Nondegenerate pumping is studied in order to seek out efficient pumping wavelengths.

One of the the important results is that the nonlinear susceptibility of a cesium atom is generally greater than that of a sodium atom. In addition, the vapor pressure of cesium is much higher than that of sodium, so that lowering the operating temperature by hundreds K with reasonable conversion efficiency could be possible in the case of diffierence frequency generation in cesium vapor.

Global Telecommunications Conference 1987 (GLOBECOM'87) November 15-18, 1987 Tokyo, Japan

Frequency and Time Comparison over a Long Distance Using a Broadcasting Satellite

Kiyohiko ITOH*, Yasutaka OGAWA*, Masami SASAKI* and Tokuo SATOH**
* Faculty of Engineering, Hokkaido University, Sapporo, 060 Japan
** Radio Research Laboratory, Ministry of Posts and Telecommunications, Koganei, Tokyo, 184 Japan

A television signal via broadcasting satellite is expected to be an effective medium for frequency and time comparison over some distances. One of the difficulties inherent in the use of the broadcasting satellite is the Doppler shift due to the drift around the geostationary orbit. However, we may cancel out the effect of the Doppler shift using the predicted orbital data. Regarding the time comparison, we must correct propagation delay time differences. The experiments were carried out between Sapporo and Tokyo. The impotant results are as follows. The accuracy of frequency comparison is a few parts in 10^{10} in the worst case due to the Doppler shift. However, if we correct the measured values using the predicted orbital data, the error can be held within $\pm 1 \times 10^{-11}$. Furthermore, we may realize the time comparison with an accuracy of about 0.1 μsec and a precision of about 10 nsec.

16th International Symposium on Space Technology and Science (16 th ISTS) May 22 -27, 1988 Sapporo, Japan

An Inland Hogline Rectenna Using a Circular Microstrip Antenna

Kiyohiko ITOH, Yasutaka OGAWA, Yasushi KONDOH, Tadayoshi SUGA and Hiroyoshi YAMADA
Faculty of Engineering, Hokkaido University, Sapporo 060 Japan

An earth terminal " rectenna " is one the essential elements of a solar power satellite system. This paper describes an inland hogline rectenna using a circular microstrip antenna. First, we state that the inland rectenna has an advantage over the offsore one. We describe the inland rectenna and associate artificial city. Then, we discuss the hogline rectenna and modified hogline rectenna. Both of them are composed of a reflector and primary radiator. The circular microstrip antenna is used for the primary radiator, and wires constitute the reflector. Then, although the microwave from the solar power satellite is reflected by the wires, the sunlight passes through the reflector. This is very desirable for the inland rectenna. Finally, we consider the circular

microstrip antenna using a superconductor. If the rectenna element is composed of the high-T_c superconductor, we may obtain the narrow-band and high efficiency characteristics which are desirable for energy conversion.

1987 Sapporo International Computer Graphics Symposium October 21-23, 1987

An Image Reconstruction of Synthetic-Aperture Radar

Atsushi ITO, Tomoaki SHIRAKAWA, Tetsuo SHIMONO
Hideo KITAJIMA, and Yoshiko OGAWA

The Synthetic Aperture Radar (SAR) is an imaging radar which has a high resolution for two directions. A digital algorithm for the reconstruction of SAR imagery was proposed by C. Wu. In this paper, a brief description of this algorithm and the simulation based on this algorithm for a point target are given. The result of this ideal simulation shows that the pulse width for two directions is qreater than the theoretical resolution. It is suspected that the theoretical resolution cannot be achieved in Wu's method.

1987 Sapporo International Computer Graphics Symposium October 21-23, 1987

Modeling and Processing of Synthetic-Aperture Radar Signals

Hideo KITAJIMA, Tetsuo SHIMONO, Tomoaki SHIRAKAWA
and Yoshihiko OGAWA

This paper addresses modeling of synthetic-aperture radar signals. An integral equation governing the operation of a spaceborne radar is derived. A solution to the equation yields the reflectivity distribution of the radar scanned area on the earth. Variables of integration are chosen so that it can be solved efficiently through reasonable approximation. It is shown that range curvature correction is incorporated in the solution in a more natural and systematic manner than in the conventional radar-image reconstruction.

1987 Sapporo International Computer Graphics Symposium October 21-23,1987

A Quality Evaluation of Data-Compressed Images

Tetsuo SHIMONO, Hideo KITAJIMA, Tomoaki SHIRAKAWA, and Yoshihiko OGAWA

A measure to evaluate the image quality after the data compression is proposed. The measure which is highly sensitive to the blurs of edges is defined as the correlation between the original image and the error image. Furthermore a statistical blur measure is derived.

1987 Sapporo International Computer Graphics Symposium October 21-23, 1987

Resolution of Synthetic-Aperture Radar

Tomoaki SHIRAKAWA, Tetsuo SHIMONO, Hideo KITAJIMA, and Yoshihiko OGAWA

A synthetic-aperture radar (SAR) is a two-dimensional imaging radar known for its high resolution. In this paper the resolution of the reconstructed image of an SAR system is investigated using computer simulation. The correlation method which was proposed by C. Wu, et al. is used as an image reconstructing algorithm. At first the defintion of the resolution is given. Then the image reconstruction is simulated on a computer and the resolution is calculated. It is shown that the actual resolution is about 1.5 times worse than its theoretical value in both range and azimuth directions.

1987 Sapporo International Computer Graphics Symposium October 21-23, 1987

A Survey of New Range Compression Method for Improvement of SAR Image Quality

Satoru OKAMOTO, Tetsuo SHIMONO, Hideo KITAJIMA and Yoshihiko OGAWA

In this paper techniques of range compression for synthetic-aperture radar (SAR) are discussed and two mothods, which are an inverse filtering and a Wiener filtering, are suggested. These two filters yield narrower pulses, which leads to the improvement of SAR image quality, compared with the conventional methods and have a merit in that the pulse width does not depend on the chirp pulse width. Therefore the improment of range resolution is possible under a low FM rate which would result in worse range resolution in the conventional range compression method.

1987 Sapporo International Computer Graphics Symposium October 21-23, 1987

Hybrid Coding of Images

Zhi-xiong WU, Tomoaki SHIRAKAWA, Tetsuo SIMONO, Hideo KITAJIMA and Yoshihiko OGAWA

The block discrete cosine transform (DCT) coding technique is known as useful image compression method for its high compressibility and high practability . But in a reconstructed image, block effects may appear because of the DCT applied separately and independently to each block. In this paper a new hybrid coding technique is proposed for high quality image compression with a low bit rate and especially for reducing block effects. Results of a computer simulation of this new method shows that block effects can be reduced dramatically and high image quality can be attained.

18th Internatinal Conference
on Low Temperature Physics
Kyoto, August 20-26, 1987

The Effect of Oxygen on Superconductivity of Sn Films Evaporated onto Cold Substrates

M. TANIWAKI, K. KASAYA and M. MAEDA
Department of Electronic Engineering, Faculty of Engineering,
Hokkaido University, Sapporo, Japan

The effect of oxygen on superconductivity of Sn films evaporated onto cold substrates were investigated by resitivity measurement and Mössbauem spectrocopy.

Multi-layered Sn-O films were produced evaporating Sn onto a cold substrate (4.2 K) and leaking O_2 near the substrate alternately in cryostat.

The resistivity for Sn film decrased slightly by adsorption on it. The resistivity increased remarkably by following Sn evaporation on it ($\Delta Tc = 0.5$ K) and it dit not decrase remarkably by further O adsorption or Sn evaporation.

Isomer shift of Mössbauer spectrum for Sn film decreased slightly by O adsorption and that for multi-larger Sn-O films was 2.74 mm/s which was layer than it for quench-condensed pure Sn film (2.64 mm/s), Mössbauer spectra for these as condensed films did not show presence of SnO_2, however those for films after annealing at room temperature showed that the most of Sn were oxidzed.

18th International Conference
on Low Temperature Physics
Kyoto, August 20-26, 1987

Mössbauer Study on Superconducting Sn-Cu Films Condenced onto Cold Substrates

M. TANIWAKI, M. UNETA, K. KASAYA, Y. MATSUBARE and M. MAEDA
Department of Electronic Engneering, Faculy Engineering,
Hokkaido University, Sapporo, Japan

The dependences of Mössbauer spectrum parameters of quench-condensed $Sn_{1-x}Cu_x$ films on Cu concentration (0-20%) were investigated and these results were compared with Tc. Isomer shift increased with increasing x ($0 \leqq x \leqq 10$) and decreased with lamger x. The maximum of I. S. was 2.77 mm/s. Debye temperature showed the inverse dependence on x. The minimum was 107 K at $x = 10$. The dependence of Tc on x corresponded to those of Mössbauer parameteres. It shows that the change of Tc in Sn or Sn or alloys is able to be explained from the change of Mössbauer parareters. From Mössbauer data, it is considered that the addition of Cu stabilize the amorphous structure so that N (O) increases and lattice vibration softens to increase Tc. Howver excess Cu inhibits the enhancement of Tc. This is due to the strong bonding between Cu

and Sn decreases free electron and increases Θ_D. In this work the reqation between I. S. or Θ_D are discussed.

18th International Conference on Low Temperature Physics Kyoto, August 20-26, 1987

The Relation between T_c and Mössbauer Spectrum Parameters on Superconducting Sn Films

M. TANIWAKI, M. UNETA** and M. MAEDA***
Department of Electronics, Faculty of Engineering
Hokkaido University, Sapporo 060, Japan

Mössbauer spectra on vapor quenched Sn films were observed to investigate the lattice vibation and the electronic state in the disturbed lattice and to clarify their effects on the superconducing transition temperature, Tc, quantitatively. The average interatomic spacing in quenched Sn is expanded compared with β Sn, and this causes the lowering of Debye parameter and the increase in the number of free elecrons. Tc estimateted from these changes is 5.82 K which is in good accord with measured Tc.

Sixth International Conference on Rapidly Quenched Metals, Montreal, August 3-7, 1987

Local Structure and Stabitity of Amorphous Cu-Fu-Zr Alloys*

M. TANIWAKI, E. HATTA and M. MAEDA †
Department of Electronic Engineering, Faculty of Engineering,
Hokkaido University, Sapporo 060 (Japan)

The local stucture and stability of amorphous $Cu_{60-x}Fc_xZu_{40}$ were inverstigated by Mössbauer effect and differential scanning calordmetry measurementns. The isomer shift decreased with increasdng iron concentration for $x < 5$ and increased for $x > 5$. The activation energy of crystallization was 5.5-5.8 eV for $x < 5$ and decreased abruptly with increasing x for $x > 5$. These results show that copper atoms amound an iron atom are subsituted by iron atoms for $x < 5$ and that zirconium atoms around iron atom are substituted by iron atoms for $x > 5$. From the comparison of Mössbauer spectrum parameters for amorphous $Cu_{59}Fe_1Zr_{40}$ and crystallized $Cu_{59}Fe_1Zr_{40}$, it was shown thas the average local structure of amorphous $Cu_{59}Fe_1Zr_{40}$ is similar to that of crystallized $Cu_{59}Fe_1Zr_{40}$but that the former is more asymmetric then the latter. It was suggested that the asymmetry in local structure and interatomic spacing are concerned with the stability of

amorphous structure.

† Present address : Department of Electronics, Kanazawa Institute of Technology, Nonoichi-cho, Ishikawa-ken, Japan.

Sixth Internatinal Conference
on Rapidly Quenched Metals
Montreal, August 3-7, 1987

Mössbauer Studies of Amorphous FeB and FeBSi Aloys*

M. TANIWAKI, and M. MAEDA †
Department of Electronic Engineering, Faculty of Engineeing,
Hokkaido University, Sapporo 060 (Japan)

Mössbauer isomer shifts and internal fields were examdned in amorphous FeB and FeBSi alloys over a wide range of composition, and the electronic structure and the amtrphous tsructure of these alloys are discussed. The existence of the bonding of Fe 4s, 4p and B 2p or Si 3p is suggested. The sites of the metalloid atomes are explained using Polk's idea.

† Present address : Deparoment of Electronics, Kanazawa Instiute of Technology, Nonoichi-cho, Ishikawa-ken, Japan.

High Temperature Superconductors Materials and Mechanism of Superconductivity Interlarken, Feb 29 -March 4, 1988

The Electronic State and the Lattice Vibration of Europium in the High Temperature Superconductor Ba_2 $EuCu_3O_y$ Observed by Mössbauer Effect Spectroscopy

Masafumi TANIWAKI and Hiroyuki SASAKI
Department of Electronic Engineering, Faculty of Enginnerdng,
Hokkaido University, Sappro 060, Japan

The electronic state and the lattice vibration of europium in the superconducting $Ba_2EuCu_3O_y$ are investigated by ^{151}Eu Mössbauer effect spectroscopy. The europium is tri-valent and the magnetic field is not observed at temperatures between 4.2 K and 350 K. The Debye temperature estimated from the temperature dependence of the line intensity is 240 K. However the temperature dependence of the line intensity and the second order doppler shift are deviated from Debye approximation.

1987 International Conference on Coal Science Maastricht, The Netherland, October 26-30 (1987)

Amount of Pyridine Extractable Material in Bituminous Coal

K. OUCHI, S. ITOH, M. MAKABE, H. ITOH
Faculty of Engineering, Hokkaido University

By the pyridine extraction and the reaction in naphthalene, about 50% of Akabira Hokkaido coal can be extracted by pyridine. More than half of this extract was difficult to be extracted by conventional extraction of the original coal, because the entangling network structure retained the extractable material. This method actually contributes to the melting of coal or it can be said that coal cannot be melted unless such a large amount of solvent of the soluble material is present.

1987 International Conference on Coal Science Maastricht, The Netherland, October 26-30 (1987)

Analysis of Neutral Polar Fraction in Mild Hydrogenation Product of Subbituminous Coal

T. KATOH, K. OUCHI
Faculty of Engineering, Hokkaido University

Hokkaido Taiheiyo coal was mildly hydrogenated and its hexane soluble polar fractions were analysed by the ingenious device. These fractions could not be analysed by the ordinary GC and GC-MS method because of the extremely complex mixture, therefore FI spcectra were measured, which were then grouped following Z number. On the other hand they were hydrogenated and dehydrogenated completely, following GC and GC-MS analysis. Running a Comparison of these results with FI grouping made it possible to determine the precise analsis of these fractions.

1987 Colloque International du CNRS, Caractérisation des Produits issus de la Pyrolyse du Charbon Metz, France, November, 11-13 (1987)

Fabrication of Feedstock for Chemical Industry from Coal Tar and Coal Liquid

K. OUCHI, R. L. REN, H. ITOH
Faculty of Engineering, Hokkido University

The fractions of coal tar and coal liquids were treated with methanol at 800-950°C. Dealkylation and dehydrogenation as well as the elimination of phenols and nitrogen containing compounds proceeded very well. The products show a very simple composition, which can be easily separated into separate pure compounds.

1987 Gordon Research Conference on Organic Reactions and Processes, July, 1987, New Hampton, N. H., U. S. A.

New Selective Synthesis Using Organoborane Reagents (Invited Lecture)

Akira SUZUKI

Previously, we reported a simple and versatile synthesis leading to conjugated (E, E)-, (E, Z)-, (Z, E)-, and (Z, Z)-alkadienes, which involves a cross-coupling reaction of (E)-or (Z)-1-alkenyldisiamylbornes, or 2- [(E)-1-alkenyl] -1, 3, 2-benzodioxaboroles with either (E)-or (Z)-1-alkenyl halides in the presence of a catalytic amount of palladium catalyst and base in benzene.

The coupling with (E)-1-alkenyl-1, 3, 2-benzodioxaboroles prepared via the hydroboration of alkynes with catecholborance invariably gives the expected dines in 80-90% yields, while the coupling reactions with (Z)-1-alkenyldialkyboranes give relatively poor yields of coupling products of less then 50%.

Most recently, we have found the palladium-catalyzed cross-coupling reaction of diisopropyl (Z)-1-alkenylboronates provides conjugated (E, Z)-and (Z, Z)-alkadines in excellent yields.

Post-ICHAC (International Conference on Heteroatom Chemistry) 1987 Tsukuba Conference, July, 1987, Tsukuba, Japan

Haloboration and its Application to Organic Synthesis (Invited Lecture)

Akira SUZUKI

B-Bromo- or B-iodo-9-borabicylclo[3.3.1]nonane (B-X-9-BBN) and other haloboranes such as BBr_3 react readily with 1-alkynes through Markovnikov cis-addition of the X-B moiety to C≡C bonds. The haloboration occurs chemoselectively at terminal C≡C bonds, but not at internal C≡C terminal and internal C=C bonds. The haloboration adducts thus obtained are valuable intermediates to afford various organic compounds stereo-and regioselectively in good yields, some of which are shown below :

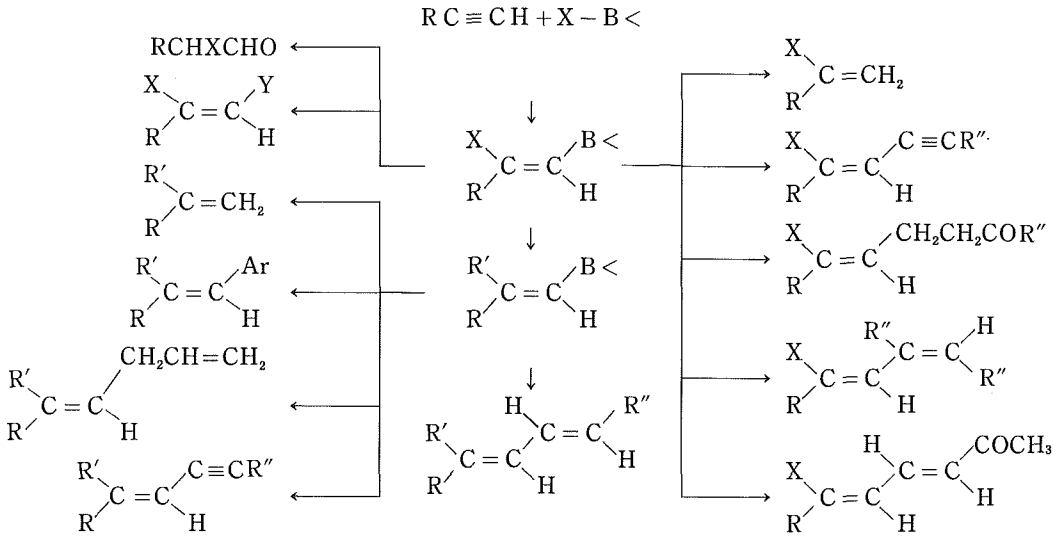

1-Ethoxyethyne reacts with B-I-9-BBN to give the corresponding cis-adduct which is readily converted into (E)-α, β-unsaturated carboxylic esters and δ-keto esters.

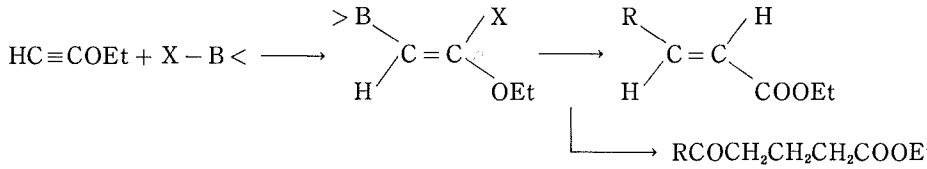

Haloboration of propadiene with BBr_3, followed by the reaction with carbonyl compounds to produce 2-bromo-4-hydroxy-1-alkenes in excellent yields.

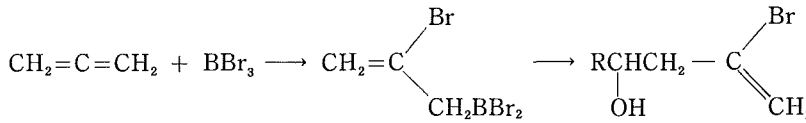

THE TENTH CELLULOSE CONFERENCE May 29-June 2 State University of New york COLLEGE OF ENVIRONMENTAL SCIENCE AND FORESTRY syracuse,NY 13210

Memory Phenomenon of the Original Crystal Staruture in Polymorphs of Na-Cellulose,

Jisuke HAYASHI, Takuji YMADA, and Yu-ichi SIMIZU,
Hokkaido University, Faculty of Engineering,
Kita-ku N13 W8 Sapporo 060, Japan.

A new polymorph of Sodium Cellulose (Na-Cell) was obtained from Na-Cell 1 through Na-Cell III by drying at room temperature, and named Na-Cell VI. Na-Cell VI was also obtained directly from Na-Cell I by heat treatment at 180-200℃.

We have reported that Na-Cell I prepared from Cellulose I family (I, III_I, IV_{II}) and Cellulose II family (II, III_{II}, IV_{II}) are different from each other in the relative intensity ratio of meridional-reflections and are classified into Na-Cell I_I and I_{II}, respectively. The same phonomenon was found for Na-Cell III and VI prepared from Na-Cell I_I and Na-Cell I_{II} were different in their x-ray diagrams and were classified into Na-Cell III_I and VI_I and Na-Cell III_{II} and IV_{II}. The former (Na-Cell III_I and VI_I) and the latter (Na-Cell III_{II} and VI_{II}) were regenerated into cellulose I andII by decomposition with hot water, respectively.

Shenyang International Symposium on Dust Explosion Shenyang, P. R. C. Sept. 14-16, 1987 (Plenary Lecuture)

Theoretical Consideration on Dust Explosion

Tatsuo TANAKA
Dept. Chem Process Engng.,

Explosive characteristics of fine powder have thus far been experimentally investigated in terms of ignition temperatura, ignition energy, explosive limit concentration of dust, oxygen concentration, propagation velocity, maximum rate of pressure rise and so on.

In view of the recent increase of hazardous particulate materials being handled in industry the importfnce of basic study of dust explosion mechanism has increasingly been pointed out.

This lecture deals with theoretical consideration of dust explosion on the basis of a simple model of dust cloud, which consists of uniform sized spherical particles dispersed evenly in space.

From this model some of the above mentioned explosive characteristics will be theoretically derived and compared with existing experimental data. In this lecture, ignition temperature, upper and lower limit explosible concentration, inerting, maximum rate of pressure rise are only dealt with.

Vent area disign is also discussed based on the cubic law, the validity of which has been proved here. Furthermore, spontaneous ignition of dust deposit will also be mentioned.

Eleventh International Congress of Heterocyclic Chemistry, Heidelberg, West Germany, August 16-21, 1987

New Syntheses of Furoquinolones and Furocoumarins by Means of [2+2] Photocycloaddition-β-Scission Sequence

Hiroshi SUGINOME, Kazuhiro KOBAYASHI, Chi Fu LIU,
Masahito ITOH and Shinzo SEKO
Department of Chemical Process Engineering, Hokkaido University

We wish to report the synthesis of several new furoquinolones and furocoumarins by means of the photolysis of the hypoiodites of cyclobutanols formed by [2+2] photocycloaddition of N-methyl-4-hydroxy-2-quinolone or 4-hydroxycoumarin with alkenes, cycloalkenes, vinyl ethers or vinyl carboxylates. Photolysis of the hypoiodites of cyclobutanols obtained by [2+2] photocycladdition of N-methyl-4-hydroxy-2-quinolone with the above olefins with a Pyrex-filtered light gave 3, 4-furo-4-quinolones and/or 2, 3-furo-4-quinolones.

Similarly, phtolysis of cyclobutanols obtained by photocycloaddition of 4-hydroxycoumarin with the olefins gave furocoumarins, although the alkoxyl radicals generated from the photoadducts of 4-hydroxycoumarin and 2, 3-dimethyl-2-butene or 2-methy-2-butene gave furocoumarin together with furochromone.

Probable pathways leading to those furoquinolones, furocoumarins and furochromones which involve an intramolecular regioselective combination of a carbon centered radical and a carbonyl oxygen are discussed.

Gordon Research Conference
Los Angeles, U. S. A. March
7-12, 1988,

Magnetic Resonance Studies on Cross-Links in Polyethylene and Its Model Compound

M. TABATA*, J. SOHMA*, W. YANG*, K. YOKOTA,
H. YAMAOKA** and T. MATSUYAMA

* Faculty of Engineering, Hokkaido University, Sapporo, 060, Japan
** Research Reactor Institute, Kyoto University, Kumatori, Osaka, Japan

Difference in mobility was detected between the γ-irradiated and neutron irradiated eicosane by analysis of ESR spectra obtained by the spin-trapping method. Three kinds of crosslinked dimeres were found by FI mass spectroscopy ; saturated cross-linked dimer, cross-linked dimers having either one double bond or two. The relative intensities of these dimers were also different between the γ and neutron irradiated ones. ^{13}C-NMR spectra were observed from the cross-linked n-eicosance. CH_2 peaks in the NMR spectrum were clearly distiguished from others by the INEPT method. The analysis of the NMR spectra indicated that the majority of the cross-links formed were the H-type.

^{13}C-NMR of irradiated PE obtained by the CP-MAS method was also discussed.

First Excitation Processes
Tokyo, Japan, March 21-25,
1988

A Pulse Radiolysis and ESR Study of IONIC Species in Irradiated Poly(methyl methacrylate)

M. TABATA*, J. SOHMA*, H. WASHIO**, S. TAGAWA**, Y. TABATA

* Facuty of Engineering, Hokkaido Univerersity, Sapporo, 060,Japan
** Nuclear Engineering Research Laboratory, Faculty of
Tokaimura, Ibaragi, Japan

The unstable intermediates formed in poly methyl methacrylate (PMMA) under the action of ionizing irradiation were investigated by pulse radiolysis method combined with ESR spectroscopy. It was found that the absoroption maximum at 725 nm observed at 10 ns of the electron pulse was assigned to that of the anion radical (R^+) of PMMA. On the other hand, the absorption maximum observed at around 425 um was attributed to cation radical (R^+) which was the counter ion of the negative species in PMMA solid. The formation of positive ion radical was also confirmed by the pulse radiolysis experiment in liquid phase using dichloromethane with high ionizing potential energy.

The 29th Rocky Mountain Conference, the 10 th EPR Symposium Denver, Colorado USA Aug. 2-6, 1987

Development of Ultra High Resolution EPR Imaging

Kiichi OHNO
Faculty of Engineering, Hokkkido University

The resolution of EPR imaging depends upon magnetic field gradients, linewidths, concentrations of paramagnetic species and signal -to-noise ratios. To obtain ultra high resolution and sufficient signal using an ordinary EPR cavity one needs such a high concentration of the species in a small volume that dipole-dipole or exchange interactions may occur. If submicron dimension samples with less spin concentration can be used by means of a novel miniature detector with high sensitivity, all factors except for the linewidths are improved a great extent. This small scale is also advantageous for obtaining a large magnetic field gradient due to setting anti-Helmholtz coils very closely to each other. Experimental results were presented.

The First Japan China Bilateral ESR Symposium Hanqzhou, China Nov. 28-30, 1987

Development of Ultra High Resolution ESR Imaging

Keiichi OHNO
Faculty of Engineering, Hokkaido University

Microscopic ESR imaging will become a powerful tool for studies on the properties of matters, chemical physics, archaeology , radiation dosimetry and biology. This paper describes the development of an ultra high resolution ESR imaging using a microcoil system made of very thin copper wire (dia. 20 um), with a resolution of a few 1 G. A fine DPPH particle as a phantom sample was imaged with a magnetic field gradient of 2000 G/cm.

18th International Conference
on LOW TEMPERATURE
PHYSICS, Kyoto, Japan
August 20-26, 1987

Fractons in Percolation Clusters

Kousuke YAKUBO and Tsuneyoshi NAKAYAMA
Department of Applied Physics, Hokkaido University,
Sapporo 060, Japan

The mode patterns of fractons are obtained for the first time in terms of a novel numerical methed. It is found that the mode patterns of fractons are peculiar to the percolation clusters and the fracton density of states N (ω) obeys clearly the $\omega^{1/3}$ law as conjectured by Alexander and Orbach. We could not fiind the notable rapid rise nor the hump in the density of states in the phnon-fracton crossver region.

18th International Conference
on LOW TEMPERATURE
PHYSICS, Kyoto, Japan
August 20-26, 1987

Kapitza Resistance between Sintered Metal-Particles and ^{3}He-^{4}He Mixture

Tsuneyoshi NAKAYAMA and Kousuke YAKUBO
Department of Applied Physics, Hokkaido University,
Sapporo 060, Japan

The heat transfering mechanisms between sintered metal-particles and ^{3}He-^{4}He mixture are investigated theoretically in the millikelvin temperature region. It is suggested that a deformation coupling between ^{3}He-quasiparticles and low-lying vibrational modes peculiar to sinters is relevant to the effective heat transfer.

12th International Conference on Amorphous and Liquid Semiconductors, Prague, Czechoslovakia, 28 August, 1987

Topological Phase Trasitions in Amorphous Semiconductors (Invited)

Keiji TANAKA
Department of Applied Physicn, Faculty of Engineering
Hokkaido University, Sapporo 060, Japan

" How can we understand the structure of non-crystalline solids ? " has been a long standing problem for materical physicists. At present we are coming to the point where we can grasp the short-range configuration fairly well, whereas speculation on the medium-range topology is still highly controversial. It has been recognized that diffraction studies alone cannot give a unique picture. This talk shows, through systematic inspection of a variety of physical properties, that " when composition characterized by the average coordination number Z and applied pressure P are varied, phase transitions from molecular to network structures are revealed in covalent glasses ". The molecular structure is stable in a limited region to $Z \lesssim 2.7 = Z_c$ and $P \lesssim 20$ Kbar (= 2 GPa) $= P_c$.

MRS International Meeting on Advanced Materials Tokyo, Japan, 1 st June, 1988

Photo-Optical Devices by Amorphous Chalcogenide Films

Keiji TANAKA
Department of Applied Physics, Faculty of Engineering
Hokkaido University, Sapporo 060, Japan

Amorphous chalcogenide semiconductors show a variety of photo-induced phenomena such as photodarkening, photodoping and optical stopping effect. Further, the materials can be prepared in thin-film forms by conventional evaporation techniques. Thus, the deposited films have become a promising candidate for optical applications. This study aims to produce a novel photo-optical switching and memory device using photoinduced optical changes in amorphous As-S waveguides.

The devices utilize waveguides consisting of As-S films, in which red light (6328 A) beams are propagated. The beams are controlled, switched and deflected by the refractive-index changes induced by the red and blue-light (4880 A) illumination. The waveguide structure is effective to increase the power density, thus permitting a faster response, which varies from μsec to sec regions, depending on intensities of the light beams. The device can be substituted for conventional mechanical relays in optical systems.

March 1988 Meeting of the American Physical Society New Orleans, U. S. A., 21 st March, 1988

Preparation and Properties of Polymeric Amorphous Silicon and Carbon Alloys between Polysilane and Polyacetylene

S. NITTA, S. NONOMURA, A. YASUDA,
S. HATTORI and H. HAYASHI
Faculty of Engineering, Gifu University
1-1 Yanaido, Gifu 501-11, Japan

Keiji TANAKA
Department of Applied Physics, Faculty of Engineering
Hokkaido University, Sapporo 060, Japan

Polymeric hydrogenated amorphous silicon and carbon alloys are prepared by glow discharge decomposition of mixed gases of disilane and acetylene. Structural changes by mixing the gas ratio are shown by infrared absorption spectra and by ESR spectra. Electronic properties are examined for the polysilane side and for the polyacetylene side. Polysilane-like materials show large photoluminescence fatigue effects, photo-quenched ESR and large compressibilities. These properties are very different from conventional three dimensional hydrogenated amorphous silicon films and similar partly to amorphous chalcogenides having chain structures. Polyacetylene-like materials show photo-induced darkening effects which can be explained by photo-induced chemical reaction.

Presented at ICO-14, held in Quebec in 24-28, Aug. 1987

Frequency Stability of Simple Commercial He-Ne Laser for Practical Length Standards

Kei-ici TANAKA and Sei-ichi KAKUMA
Dept. of Applied Physics, Facutly of Engineering,
Hokkaido University, Sapporo 060, Japan

Frequency stability is measured for two types of commercial He-Ne lasers used as light sources of practical length meauring interferometers by comparing with an iodine stbilized He-Ne laser. The frequency of the iodine stabilized laser was locked at i- or j-component of the absorption lines of $^{127}I_2$. One of the measured lasers has a pair of orthogonal 633 nm plane polarized components belonging to adjacent longitudinal resonance mode. The other has Zeeman splitted two orthogonal plane polarized components by applying a transverse magnetic field to the laser tube. Frequency is stabilized in both cases by the temperature control of the tube using a fan and heater so that the intensity ratio of the two components is held constant. The measured frequency stabilties of those lasers were $\pm 1.2\times 10^{-8}$ and $\pm 5.0\times 10^{-9}$, respectively.

14th Congress of the International Commission for Optics, " Optics and the Information Age ", Québec, Canada, August 24-28, 1987

Phase Measuring Interferometry with a Tunable Semiconductor Laser

Yukihiro ISHII, Jun CHEN, and Kazumi MURATA
Department of Applied Physics, Faculty of Engineering,
Hokkaido University, Sapporo 060, Japan

A digital phase-measuring interferometer with a laser-diode source was developed based on a fringe-scanning technique with a stepwise wavelength change by variation of the laser injection current. The phase is changed to produce a relative phase difference between the beams in the arms of the interferometer. Calibrated phase shifts used for a phase-extraction algorithm are derived from one-dimensional least-square fits to cosine fringe funtions to achieve accurate results. Experimental results are presented.

14th Congress of the International Commission for Optics, " Optics and the Information Age ", Québec, Canada, August 24-28, 1987

Heterodyne Interferometry with a Frequency Modulation of a Laser Diode

Jun CHEN, Yukihiro ISHII, and Kazumi MURATA
Department of Applied Physics, Faculty of Engineering,
Hokkaido University, Sapporo 060, Japan

A digital phase measuring interferometer with a frequency-modulated laser diode using the integrated-bucket technique is described. The injection current is continuously changed to introduce a time-varying phase difference between the two beams of an unbalanced Twyman-Green interferometer. The intensity of the interference patterns is integrated with a CCD array sensor for intervals of one-quarter period of the fringe. Using the intensity data a microcomputer calculates the phase to be detected. Some experimental results with the interferometer are presented; the rms repeatability obtained was $\lambda/80$.

14th Congress of the International Commission for Optics, "Optics and the Information Age"; Québec, Canada, August 24-28, 1987

Designing the Collimator of Off-axis Spherical Mirror with a Computer-generated Holographic Optical Element

Yukihiro ISHII and Kazumi MURATA
Department of Applied Physics, Faculty of Engineering,
Hokkido University, Sapporo 060, Japan

This paper describes a design technique of a collimator of a concave spherical mirror in off-axis setup, which is based on the aberration-compensation method of passing the conjugate wave from a computer-generated holographic optical element through its illuminating optical system. To deduce the wavefront aberration to be compensated, the system is first ray traced using vector analysis. Since the off-axis setting of a mirror causes the aberration in the wavefront, the aberration is balanced by minimizing the mean-squared wavefront deformation in a tangential plane due to the unsymmetric property of wavefront in terms of a direct search algorithm, and consequently the required number of fringes of a interference-type computer-generated hologram (CGH) can be drastically reduced. The locations of fringes of CGH are computed from a contour program with 512×512 sampling grid points which are equal to the numbers of rays. A high-efficiency and lownoise hologram is made by recording a diffracted wave from this CGH with a reference wave on dichromated gelatin plate with the illumination of Ar laser and serves as a corrector plate. Experimental interferograms showing a blank field verify the performance of designing the collimator of off-axis spherical mirror in comparison with the ones of the uncorrected mirror.

NOAO-ESO Conference on " High Resolution Imaging by Interferometry ", Garching, FRG, March 15-18, 1988

Speckle Spectroscopy Based on Shift-and-Add Method

Naoshi BABA and Masahiro TABATA
Department of Applied Physics, Faculty of Engineering,
Hokkaido University, Sapporo 060, Japan

We propose a mothod for speckle spectroscopy, in which objective prism spectra of astronomical objects are reconstructed from dispersed speckle data with the use of the shift-and-add method. As the shift-and-add method is applicable to white light speckle images, we can perform wideband speckle spectroscopy.

A major drawback of the shift-and-add method is the production of large background components in the reconstructed image. A simple method to subtract background components from a shift-and-add image is also described.

We conducted some laboratory experiments for speckle spectroscopy. The experimental results confirm the usefulness of the shift-and-add method for speckle spectroscopy.

International Symposium on Accuracy in Structure Factor Measurement, Green Gables Chalet, Warburton, Victoria, Australia, 23-26 August 1987

Accurate Determination of the Structure Factors by Pendellösung Methods Using White Radiation

T. TAKAMA and S. SATO
Department of Applied Physics, Faculty of Engineering
Hokkaido University, Sapporo 060, Japan

This paper describes two experimental techniques measuring the Pendellösung beats using white radiation, developed in the authors' laboratory. The intensity of a Laue spot diffracted from a parallel-sided single crystal is successively measured at different Braggangles, i. e. with different wavelengths. The values of structure factors are evaluated from extremum positions in the measured beats on the basis of the dynamical diffraction theory. In the first method, the integrated intensity diffracted from the whole exit surface is measured, and in the second, the measurement is made only at the center of the Borrmann fan on the exit surface of specimen. A discussion is given on the accuracy associated with the following origins of errors: (1) polarization of incident white radiation, (2) measurement of specimen thickness, (3) measurement of

wavelength, (4) determination of extremum positions, and (5) effect of defects in the crystal.

Fourteenth International Congress of Crystallography, Perth, Australia, August 12-20, 1987

Measurements of the X-Ray Pendellösung Beats from Elastically Bent Silicon Single Crystals

T. TAKAMA, K. KOBAYASHI and S. SATO
Department of Applied Physics, Faculty of Engineering
Hokkaido University, Sapporo 060, Japan

The effect of uniform elastic strain on the Pendellösung interference phenomenon was investigated by the technique for measuring the Pendellösung beats on the wavelength scale. An isosceles triangular shaped silicon wafer was uniformly bent by pushing slightly the apex toward the direction normal to the surface. As the curvature of the specimen increased, the following changes were clearly observed: (1) The diffracted intensity increases especially in the short wavelength range. (2) The extremum positions moves to the shorter wavelength side. (3) The amplitude of the beats decreases and finally the beat smears out. (4) The phenomena depend on the magnitude of curvature, the index of reflection plane and the orientation of specimen. The experimental results were discussed in detail in comparison with the dynamical theory for a distorted crystal. A fairly good agreement is drawn between the theory and the experiment.

Fourteenth International Congress of Crystallography, Perth, Australia, August 12-20, 1987

Accurate Determination of the Structure Factors of Alpha-Quartz

K. KOBAYASHI, T. TAKAMA and S. SATO
Department of Applied Physics, Faculty of Engineering
Hokkaido University, Sapporo 060, Japan

The structure factors of α-quartz were accurately determined by the method for measuring X-ray Pendellösung intensity beats of white radiation diffracted from perfect single crystals. Six parallel-sided wafers with $\{11\bar{2}0\}$, $\{10\bar{1}0\}$ and $\{0001\}$ surfaces and 0.5~1.0 mm in thickness were cut from a synthetic crystal for commercial use as quartz oscillators. The struture factors for 21 reflections from $10\bar{1}\bar{1}$ to $10\bar{1}\bar{5}$ were determined from the extremum positions of the intensity beats. The ratios of $|F_{hkil}|/|F_{hki\bar{i}}|$ agree very well with those from the measurement of thickness

fringes on the topograph (K. Yamamoto, S. Homma and N. Kato, Acta Cryst., A24 (1968), 232), but slightly differ from those by the measurements of integrated intensity. A discussion was made on the position of Si and O atoms as well as on the anisotropic thermal vibrations based on the measured structure factors.

18th International Conference on Low Temperature Physics, August 20-26, 1987, Kyoto, Japan.

Anisotropic Superconducting Transition of $TaSe_3$

Mitsuru MORITA* and Kazuhiko YAMAYA
Department of Nuclear Engineering, Hokkaido University,
060 Sapporo, Japan

It was found from measurement of anisotropic resistivity of $TaSe_3$ by using the Montgomery method that $TaSe_3$ showed an anisotropic superconducting transition. The usual superconducting transition was obrerved in the parallel direction to the b-axis, while in the perpendicular direction, a finite resistivity was obrserved even at the lowest temperature. The superconductivity of $TaSe_3$ is found to be bulk but of a filamentary nature.

18th Internatinal Conference on Low Temperature Physics, August 20-26, 1987, Kyoto, Japan.

Low Temperature Specific Heat of $ZrTe_3$

Satoshi MATUDA,Kazuhiko YAMAYA, Yutaka ABE, and Takashi SAMBONGI*
Department of Nuclear Engineering, Hokkido University, 060 Sapporo, Japan
*Department of Physics, Hokkido University, 060 Sapporo, Japan

Specific heat of $ZrTe_3$ was measured by the thermal relaxation method in the temperature range from 1.3 k to 9 K. The lattice contribution to the specific heat deviated from Debye-behavior near 5 k, changing from T^3 to $T^{2.5}$. This behavior indicates the effects of lattice anisotropy. From the electronic contribution to the specific heat we estimated an electron density of states at the Fermi level of 0.67 states/(eV. spin. molecule). The specific heat anomaly at the superconducting transition was not a jump, but gradual increase from the normal value. This supports a filamentary nature of the superconductivity in $ZrTe_3$.

14th International Symposium on GaAs and Related Compounds, September 28-October 1, 1987, Heraklion

Acoustic deep level spectroscopy of semi-insulating GaAs and InP

Yutaka ABE
Laboratory of Quantum Instrumentation, Hokkaido University,
Sapporo, 060, Japan

ABSTRACT: The acoustic internal friction of undoped, In-doped GaAs, and Fe-doped InP has been measured along the various crystal directions. It is found that the observed relaxation peaks in the specimen are well explained taking account of the screening of piezoelectric field by free-carriers emitted from deep-lying impurity level.

5th International Conference on Hot Carriers in Semiconductors, July 19-23, 1987, Boston, U. S. A.

Impact Ionization and Chaotic States in Narrow-Gap Semiconductors Under a Strong Magnetic Field

Yutaka ABE
Laboratory of Quantum Instrumentation, Hokkaido University,
Sapporo, 060, Japan

ABSTRACT

A model for recombination instability of a narrow-gap semiconductor in the freeze-out regime is investigated. It is shown that the thermal transition probability for the phonon-assisted generation and recombination of electrons from the excited donor states plays the dominant role for the occurence of the bistable states in the conduction electron density and the current instability among the various rate coefficients in the region of post-brakdown.

8th International Conference on Plasma Surface Interactions in Controlled Fusion Devices, Julich, FRG, May 2-6, 1988

Desorption Processes of Hydrogen and Methane from Clean and Metal Deposited Graphite Irradiated by Hydrogen Ions

S. FUKUDA, T. HINO and T. YAMASHINA
Department of Nuclear Engineering, Hokkaido University
Sapporo, 060 Japan

Thermal desorption processes of H_2 and CH_4 from clean graphite surface and metal deposited graphite surfaces have been investigated. Thin metal layers of Ti, Cr and Fe on isotropic graphites were prepared by an electron beam evaporation method. For these specimens, the irradiation and the desorption experiments were performed with the use of an ECR ion irradiation apparatus. The desorption spectra of H_2 and CH_4 from the clean surface had only a single peak at 700 °C and 800 °C. These peaks were found to originate fsom the diffusion limited process and to be attributed to the intrinsic nature of graphite. The metal depositions on the graphite surface caused a new desorption peak for H_2 and CH_4 besides the intrinsic peak. The temperature and intensity of the new peak depended on the metal species. The presence of the metals increased the amount of desorbed H_2 for the fluence more than 1×10^{18} H/cm^2 but decreased the amount of desorbed CH_4 in the whole fluence range of this study. Fe was most effective to reduce the CH_4 desorption among the three metals.

8th International Conference on Plasma Surface Interations in Controlled Fusion Devices, Julich, FRG, May 2-6, 1988

Study on Carbon Coating Films Produced in Heliotron-E

H. MINAGAWA, T. HINO and T. YAMASHINA,
Hokkaido University, Sapporo 060, Japan.
M. WATANABE
Research Institute for Catalysis, Hokkaido University,
Sapporo 060, Japan
N. NODA, T. MIZUUCHI, O. MOTOJIMA,
A. IIYOSHI and K. UO.
Koyto University, Kyoto 611, Japan.

In Heliotron-E device, carbonization experiments were successfully performed by using a DC glow discharge with mixture gas of hydrogen and methane. The properties of carbon films

produced on surface probes of the surface analysis station were analyzed by Auger Electron Spectroscopy (AES), X-ray Photoelectron Spectroscopy (XPS) and Raman Spectroscopy (RS). The range of film thickness was from 17 to 40 nm, and almost no metal impurities were found in the film layer. The radial distribution of the film thickness was also analyzed. After the carbonization, the radiation loss of iron from the plasma of a main discharge was remarkably reduced.

From the depth profile analysis, it was found that carbon film could not be eroded by main discharges but D_2 or He discharge cleaning effectively removed the film. In addition, the formation of TiC in the film region was observed, after main discharge with Ti-flashing in the carbonized chamber.

8th International Conference on Plasma Surface Interactions in Controlled Fusion Devices, Julich, FRG, May 2-6, 1988

Overall Evaluation Study for Isotropic Graphite as Fusion First Wall Material in Japan

Toshiro YAMASHINA and Tomoaki HINO
Department of Nuclear Engineering, Hokkaido University,
Saporro, Japan 060

Isotropic graphite has been widely used as fusion first wall component in the present large devices. For isotropic graphite materials with different properties, however, overall evaluations, i. e. vacuum engineering properties, thermal-mechanical properties and interactions with plasmas have not been performed so far. In 1986, under the support of the Ministry of Education, Science and Culture, we organized "Graphite Project Team" as the First Wall Material Research Program. Fifteen institutions have attended on this project and eighteen isotropic graphites supplied from seven graphite manifactures of Japan have been studied by the attending groups as "common samples". From each company, both high and low density qraphites were supplied since it was presumed that the vacuum engineering and thermal-mechanical properties depended on the density. Our purpose is to characterize the different types of graphite by seveal groups and to find the required properties as the first wall material for a next large device. Through approximately two years research period, we have obtained several interesting results on surface roughness, gas desorption, hydrogen permeation, failure due to heat load and fracture toughness. It was found that the vacuum engineering properties such as the surface area, the gas desorption and the hydrogen permeation very depended on the pore bulk density. The gas desorption was very small for the graphite baked in vacuum. For the graphite treated by same way, the amount of released gas of lower density graphite was smaller. The ash content of the graphite could be reduced to ppm level by halogen gas treatment. The heat load experiment showed that most of graphites failed by roughly same heat load. The measured value of the fracture toughness was approximately same. The change of the surface morphology by hydrogen ion irradiation and the desorption of trapped ions were also discussed.

8th International Symposium on Plasma Chemistry Tokyo, Japan, August 31-September 4, 1987

Composition Change of Carbon Films on Inconel Due to Hydrogen Ion Irradiation and Heat Treatment

T. MIYAZAKI, S. FUKUDA, T. HINO and T. YAMASHNA
Department of Nuclear Engineering, Hokkaido University,
Sapporo, Japan 060

The carbon coated Inconel 625, nicked and chromium were heated at 600 °C for 10 nin in vacuum. On the nickel substrate, the carbon film disappeared, but on the chromium the carbon film survived on the surface due to the formation of Cr_3C_2. The carbon film on the Inconel 625 (Ni-Cr alloy), survived also due to the formation of Cr_3C_2. The carbon coated Inconel 625 was exposed to hydrogen ion beams. The ion induced diffusion of the chromium and nicked from the substrate to film is observed.

8th International Symposium on Plasma Chemistry Tokyo, Japan, August 31-September 4, 1987

Preparation of Carbon Films With Ti Dispersion by Combined Target in RF Sputtering

Y. MATSUNO, Y. HIROHATA, T. HINO and T. YAMASHINA
Department of Nuclear Engineering, Hokkaido University,
Sapporo, Japan 060

The titanium dispersed carbon films were prepared by using the graphite target with a titanium strip in RF magnetron sputtering device. The ratio of titanium to carbon measured by AES had a range from 0.2 to 1.1. From the analyses of XPS and XRD, it was shown that the carbon of the film was mostly amorphous and the formation of the titanium carbide was not dominant. The film with Ti/C=0.17 was exposed to the hydrogen ions (4.5 keV H_3^+, 1×10^{19} H/cm^2). By the irradiation, the titanium content in the film was approximately twice enhanced.

8th International Symposim on Plasma Chemistry, Tokyo, Japan, August 31-September 4, 1987

Properties of Carbon Coating Films produced by RF plasmas

H. MINAGAWA, T. HINO and T. YAMASHINA,
Department of Nuclear Engineering, Hokkaido University,
Sapporo, Japan 060
M. WATANABE,
Research Institute for Catalysis, Hokkaido University,
Sapporo, Japan 060

For carbon coating films produced by RF plasma in the plasma simulator device, the film properties such as crystal structure, depth composition profile and hydrogen concentration were investigated. The relation of the film properties with the plasma operation parameters and with sample parameters were examined. The films produced by the RF plasma was very hard/dense compared with those by RG and ECR plasma was very hard/dense compared with those by RG and ECR plasmas. The hydrogen concentration of the film at 200 °C was about 70% lower. The hydrogen ion irradiation also reduced the hydrogen concentration of the film.

International Symposium on Fast Excitation Processes, March 21-26, 1988, Tokyo

Energy Transfer from Excimers of Aromatic Compounds to Acylphosphine Oxide

Takashi SUMIYOSHI, Takuma SUZUKI, Meiseki KATAYAMA,
and Wolfram SCHNABEL*
Faculty of Engineering, Hokkaido University, Sapporo 060 Japan
* Hahn-Meitner-Institut, Glienicker Strasse 100,
1000 Berlin 39, West Germany

α-scission is one of the main photochemical reactions of acylphosphine oxides induced by 347 nm laser flash photolysis. Among the resulting radicals, the diphenyl phosphonyl radical was shown to have a rather high extinction coefficient at its absorption maximum ($\varepsilon = 19000\ M^{-1}\ s^{-1}$). Based on the kinetic and mechanistic studies, the α-scission was found to occur exclusively from the excited singlet state with a quantum yield of 0.5 in the case of 2, 4, 6-trimethylbenzoyldiphenylphoshine oxide (TMDPO). This finding and the strong ground state absorption of acylphosphine oxides in the region of near UV initiated us to test the possibility of singlet quenching by TMDPO. Armatic excimers were chosen as donors because they have a higher energy (emission maximun <350 nm) than the first band of TMDPO (380 nm).

A pulse radiolysis system using a 10 ns width, 45 MeV electron pulse was used to measure transient absorption spectra. Samples were irradiated after bubbling with pure argon in a quartz cell sealed with a teflon stopper. The absorbed dose was measured by a KCNS dosimeter.

Absorption spectra observed immediately after pulse in benzene showed a weak absorption band peaking around 315 nm which is due to the cyclohexadienyl radical. On addition of TMDPO, a new absorption band peaked at 335 nm was formed. The spectral shape of the new band is quite similar to that of the diphenyl phosphonyl radical. The rate of decay of this band fits second order kinetics. The fast decaying absorption band at 500 nm in neat benzene can be assigned to excimers. On addition of TMDPO, this absorption was displaced by an emission which is ascribed to the fluorescence of excited singlet state of TMDPO. Based on these experimental results, it is concluded that energy transfer from benzene excimers to TMDPO occurs and that diphenyl phosphonyl radicals are formed by subsequent α-scission. With the increasing TMDPO concentration, the absorption of the phosphonyl radical approaches a plateau value. Considering the quantum yield of α-scission to be 0.5, the yield of benzene singlets can be calculated as 1.7 which is comparable with the literature values. Studies on the energy transfer from singlet excimers to TMDPO in various aromatic compounds were carried out and discussed.

The First International Conference on Heteroatom Chemistry July 19-24, 1987, Kobe

Laser Flash Photolysis of Azocumenes. Direct Observation of Stepwise Decomposition

T. SUMIYOSHI, M. KAMACHI*, and W. SCHNABEL**
Faculty of Engineering, Hokkaido University, Sapporo 060, Japan
* Faculty of Science, Osaka University, Toyonaka 560, Japan
** Hahn-Meitner-Institut, D-1000 Berlin 39, Germany

The mechanism of the decomposition of α, α'-azocumene and 2, 2'-di-p-tolyl-2, 2'-azopropane was studied by means of laser flash photolysis ($\lambda = 347$ nm) and the optical absorption of 1-methyl-1-phenylethyl (α-cumyl) and α-cumyldiazenyl radicals was observed. The α-cumyl radicals were formed in two modes, a fast mode occurring during the flash and a slow mode after the flash. The ratio of the optical densities pertaining to the two modes depended on the absorbed dose rate. The higer the absorbed dose per flash, the more dominant was the fast mode. The transient band at $\lambda = 285$ nm which decayed simultaneously with the grow-in of the α-cumyl radicals was assigned to α-cumyldiazenyl radicals. The experimental results strongly suggested the occurrence of the stepwise decomposition mechanism as follows:

$$\mathrm{Ph{-}C(CH_3)_2{-}N{=}N{-}C(CH_3)_2{-}Ph} \longrightarrow \mathrm{Ph{-}C(CH_3)_2{-}N{=}N\cdot + \cdot C(CH_3)_2{-}Ph} \quad (1)$$

$$\mathrm{Ph{-}C(CH_3)_2{-}N{=}N\cdot} \longrightarrow \mathrm{Ph{-}C(CH_3)_2\cdot + N_2} \quad (2)$$

$$\mathrm{2Ph{-}C(CH_3)_2{-}N{=}N\cdot} \longrightarrow \mathrm{Ph{-}C(CH_3)_2{-}N{=}N{-}N{=}N{-}C(CH_3)_2{-}Ph} \quad (3)$$

$$\mathrm{Ph{-}C(CH_3)_2\cdot} \longrightarrow \text{product} \quad (4)$$

$$\mathrm{Ph{-}C(CH_3)_2\cdot + Ph{-}C(CH_3)_2\cdot} \longrightarrow \text{product} \quad (5)$$

The dose rate dependent kinetics of the slow formation process was explained in terms of the

competition between the unimolecular decomposition and the dimerization of α-cumyldiazenyl radicals. The rate constants of the decomposition and the dimerization were estimated to be $1.1\times10^{5}s^{-1}$ and $5\times10^{9}M^{-1}S^{-1}$, respectively.

The 3rd Poland-Soviet Seminar on Radiation Chemistry, Siedlce, Poland, April 18-22, 1988

Optical Transient Absorption Spectra in LiBr-KBr Melts as Irradiated by Pulse Radiolysis Method

Sadashi SAWAMURA*, Jerzy L. GEBICKI, Józef MAYER and Jerzy KROH
* Department of Atomic Science and Nuclear Engineering, Faculty of Engineering, Hokkaido University, Sapporo 060, Japan
Institute of Applied Radiation Chemistry, Technical University of Łódź, Łódź, Poland

Alkali halide salts melts can be used as solvent materials for nuclear fuels and coolants in advanced molten salt nuclear reactors where these salts are irradiated by ionizing particles of different LET. Taking into account these arguments it is interesting to study the radiolysis of alkali halide melts and their mixtures. Lithium (^{7}Li) halide itself and as a component of the mixtures seems to be of special interest because of its low cross section for neutron capture.

In the psesent work we have studied the LiBr-KBr melts using the nanosecond pulse radioysys method. The optical transient absorption spectra, their temperature and composition dependence were investigated. The results are discussed in terms of "mean ion distance" model as introduced by Schmitt and Schindewolf.

XXII-nd International Congress of International Association for Hydraulic Research, August 31-September 4, 1987.

Wind Forced Internal Waves in A Stratified Reservoir

Morimasa OHTANI, Keiji OKAMURA and Isao YAKUWA
Department of Engineering Science Hokkaido University
North 13, West 8, Sapporo 060, Japan

The behavior of internal waves in Kanayama Reservoir due to wind force is discussed in this paper on the basis of observational results from July 23 through to Novemver 30, 1985.

Also numerical analysis using a two-layer model was applied for this problem.

The following results were obtained.

(1) Genemally, internal waves are generated by surface wind shear stress. Observation shows that internal waves and wind speed have almost the same period, therefore it might be concluded that this phenomenon is close to a compulsory oscllation.

(2) Isothermal contour is obtained through a lengthy period of time series of temperature data around the thermocline level.

It shows the existance of internal waves which have a slightly different frequency and amplitude at each end of this reservoir. This difference might be caused by the triangular shape of longtiudinal section. The amplitude is larger on the shallower side.

Also spectrum analysis shows that the frequency at the deepest point is slightly smaller than that value at shallowest point. These are quite close to the wind frequencey and the difference between them is small. Therefore, it is concluded that the influence of the wind is dominant in this case.

(3) Using the two-layer model, response of internal waves against observed wind is calculated. The result shows a tendency that actual isothermal oscillation and calculated uanless have almost the same magnitude of amplitude.

4th International Conference on Solid Films and Surfaces, Hamamatsu, Japan, 23-27 August, 1987

Depth-Profiling of Metal Oxide Films Prepared with MOCVD

Masahiro SEO, Katsuya TAKEMASA and Norio SATO
Department of Engineering Science, Faculty of Engineering, Hokkaido University, Sapporo 060, Japan

Metal oxide films (Cr_2O_3 and Fe_2O_3) were prepared on platinum substrate by metal organic chemical vapor deposition (MOCVD). Depth-composition profiles of the metal oxide films were measured by the simultaneous use of Auger electron spectroscopy and argon-ion sputtering. The composition broadening, Δz, at the film /substrate interface was evaluated as a function of film thickness, z, from the measured depth profiles. The relative depth resolution defined by $\Delta z/z$ improved rapidly with film growth and then maintained a constant value, which was about one third as much as that of the Cr_2O_3/Cr or Fe_2O_3/Fe system prepared with dry oxidation. The predominant factors (surface roughness and film structure) influencing the relative depth resolution were discussed.

10th International Congress on Metallic Corrosion, Madras, India, 7-11 November, 1987

The Effect of Copper-Addition on Electrochemical Behavior and Surface Composition of Ferritic Stainless Steel in Sulfuric Acid Solution

M. SEO*, J. GUO*'*, G. HULTQUIST**, C. LEYGRAF*** and N. SATO

* Department of Engineering Science, Faculty of Engineering, Hokkaido University, Japan

' Beijing University of Iron and Steel of Technology, China

** Swedish Royal Institute of Technology, Sweden

*** Swedish Corrosion Institute, Sweden

Electrochemical behaviors and surface composition of ferritic stainless steels containing copper in 1.0 mol dm^{-3} sulfuric acid solution were investigated to evaluate the effect of copper addition on the corrosion resistivity of ferritic stainless steel.

The addition of copper significantly suppressed the active dissolution of the steels due to the surface enrichment of metallic copper. It is found that a single minor addition of copper has a detrimental effect on the stability of passive film, whereas the combined addition of copper and the other alloying elements is capable of avoiding the detrimental effect.

10th International Congress on Metallic Corrosion, Madras, India, 7-11 November, 1987

Hydrogen Evolution Kinetics in Corrosion of Copper, Iron and Zinc in Water

M. SEO*, G. HULTQUIST**, L. GRÅSJÖ** and N. SATO

* Department of Engineering Science, Faculty of Engineering, Hokkaido University, Sapporo 060, Japan

** Department of Physical Chemistry, The Royal Institute of Technology, S-100 44 Stockholm, Sweden

Oxygen consumption and hydrogen exolution were studied in a natural immersion of Cu, Fe and Zn in water. Measurements of potentials of Pt vs SCE during the course of the spontaneous corrosion of the metals were studied giving the time required to consume the (atmospheric) oxygen initially present in the cell. The amount of hydrogen which is formed in the corrosion processes, diffused and accumulated in Pd was calculated. For the three metals studied hydrogen

is released from the corroding surface mainly after oxygen has been consumed.

4th International Fischer Symposium on Electrochemical Phase Formation and Dissolution, Karlsruhe, FRG, 14-18 June, 1988

Piezoelectric Detection of Underpotential Deposition of Copper on Gold in Sulfuric and Perchloric Acid Solutions

Masahiro SEO, Xiang Chun JIANG and Norio SATO
Department of Engineering Science, Faculty of Engineering,
Hokkaido University, Sapporo 060, Japan

Piezo-electric detection was applied to interfacial study of gold in relation to the UPD process of copper. A piezo-electric element of ceramics (ZrTiPbO) was attached to a gold foil (99.99%) and a small surface stress change of gold produced by electro-modulation was sensitively detected as electric signals from the piezo-electric element by using a lock-in amplifier.

It is found that piezo-electric response to the surface stress change of gold electrode sensitively reflects the UPD process of copper and the related pzc change.

The pzc of gold in sulfuric acid solution changed with the coverage of copper on gold, drawing a sinusoidal shape. The values of pzc were significantly higher in the perchloric acid solution rather than in the sulfuric acid solution at the coverage of copper of less than 0.1. These changes in pzc are probably due to the complicated interaction among adatoms, substrate and anions in the solution.

172nd Meeting of Electrochem. Soc., October 18-23, 1987, Honolulu, Hawaii, U. S. A.

Laser Raman Spectroscopy Applied for Identification of Iron Rust

Toshiaki OHTSUKA and Norio SATO
Electrochemistry Laboratory, Faculty of Engineering,
Hokkaido University, Sapporo, 060 Japan

Laser Raman spectroscopy was used to identify the composition of initial rust layers formed on pure iron. The Raman spectra of various iron oxides and oxyhydroxides was reported for standards. The rust layer adhering to the iron specimen during immersion in aqueous solution is

composed of Fe_3O_4. The rust which was detached from the specimen to form precipitates is found to consist of γ-FeOOH, Fe_3O_4, and a trace of α-FeOOH in 0.5 moldm^{-3} Na_2SO_4 solution as well as NaCI solution.

172 nd Meeting of Electrochem. Soc., October 18-23, 1987, Honolulu, Hawaii, U. S. A.

On Two-Layer Growth of Anodic Oxide Film on Cobalt

Toshiaki OHTSUKA
Electrochemistry Laboratory, Faculty of Engineering,
Hokkaido University, Sapporo, 060 Japan

A computer calculation for the growth of the two-layer films was made to simulate the anodic oxide film on cobalt, where the mechanism of the field-assisted ion migration was assumed for the film growth. The simulation indicates that the increase or decrease of the inner layer (CoO) depends not only on the ion migration through its layer, but also on the ion migration through the outer Co_3O_4 layer.

The growth of the inner CoO layer is rastrictd by the small ionic conductance of the outer layer.

172nd Meeting of the Electro chem. Soc., Honolulu, U. S. A., Oct. 18-23, 1987

Characterization of MnO_2 by Determining the Acid-Base Dissociation Constants of Surface Hydroxyl Groups

H. TAMURA, N. KATAYAMA, M. NAGAYAMA, and R. FURUICHI

The surface of MnO_2 in aqueous solutions is covered with acid and base hydroxyl qroups formed by hydration. The acid hydroxyl qroup dissociates into a negative site and a proton, and the base hydroxyl group dissociates into a positive site and a hydroxide ion. These Charged sites constitute the surface charge density on MnO_2. In this study, the surface charge density, σ, was measured by acid-base titration of MnO_2 suspension. The value of σ became 0 at a certain pH (PZC). At pHs below PZC, σ was positive, and above PZC, σ was negative. The equilibrium conditions of dissociation of surface hydroxyl qroups were derived by considering the effect of σ on the dissociation. The values of the equilibrium constants were determined by fitting the σ-pH equations to the experimental data, and the obtained constants well characterized the acid-base nature of the oxide.

Measurements Workshop on Battery Materials (MnO_2, Zn, Carbon) for Dry Cells, Atlanta, U. S. A., May 12-14, 1988

Adsorption of Metallic Impuritios on MnO_2

H. TAMURA and M. NAGAYAMA

A method of constructing adsorption isothems for metal ions on MnO_2 and the use of the diagrams were demonstrated. Metal ion solutions were made in contact with MnO_2, pH was adjusted, and the suspensions were shaken for more than 9 hrs to attain equilibrium. Then, the pH was measured, and the metal ion concentrations in solution were determined by atomic absorption spectrophotometry. The concentration of adsorbed metal ions was obtained as the difference between the total concentration and the solution concentration, and this was converted to the surface concentration on MnO_2. The adsorption isotherms were constructed by plotting the surface concentration against the solution concentration for fixed pHs. These diagrams were used graphically and analytically to assess the metal ion concentraions in solid and aqueous phases at given conditions.

173rd Meeting of The Electrochem. Soc. Atlanta, U. S. A., May 15-20, 1988

Characterization of the Adsorption of Metal Ions on MnO_2

H. TAMURA, N. KATAYAMA, M. NAGAYAMA, and R. FURUICHI

The adsorption of heavy metal ions on MnO_2 was examined in connection with the corrosion of Zn anode of MnO_2 dry cells. The amount of adsorbed metal ions increased with increasing pH and concentrations of metal ions in solution. The behavior was interpreted by considering the formation of surface complexes between metal ions and acid and base hydroxyl groups on MnO_2. The equilibrium conditions of surface complex formation were derived and the relevant constants were determined. The established constants can be used to evaluate the amounts of adsorbed and dissolved metal ions in MnO_2 -electrolyte systems for given conditions.

The 3rd Battery Material Symposium, Honolulu, U. S. A., Oct. 13-16, 1987

Adsorption of Zn(II) Ions on MnO_2 in NH_4Cl Solutions

N. KATAYAMA, H. TAMURA, M. NAGAYAMA, and R. FURUICHI

The adsorption behavior of Zn(II) ions on MnO_2 in NH_4Cl solutions was examined as a function of pH and the concentrations of Zn(II) and NH_4Cl. The amount of adsorbed Zn(II) increased with increasing pH and Zn(II) concentration, while it decreased with increasing NH_4Cl concentration. The most predominant Zn(II) species in 1-4 mol/dm^3 NH_4Cl solutions with pHs less than 7 was calculated to be a Zn(II) trichloro complex, $ZnCl_3^-$, and the surface species on MnO_2 were estimated to be undissociated acid and base hydroxyl qroups, ≡MnOH(a) and≡ MnOH(b). The adsorption was considered to occur through the following reaction:

$$ZnCl_3^- + \equiv MnOH(a) \rightleftharpoons \equiv MnOZn^+ \cdot Cl^- + H^+ + 2Cl^-$$

This reaction quantitatively explained the effect of pH and the concentrations of Zn(II) and NH_4 Cl on the adsorption of Zn(II).

6th Intnl. Conf. on Surface and Colloid Sci., Hakone, Japan, Jun. 5-10, 1988

Formulation of Isotherms for Cation Adsorption on Metal Oxides in Terms of the Stability Constants of Surface Complexes

H. TAMURA, N. KATAYAMA, and R. FURUICHI

The adsorption of metal ions (Co^{2+}, Cu^{2+}, Ni^{2+}, and Zn^{2+}) on metal oxides (MnO_2 and Fe_3O_4) was examined as a function of pH and concentrations of these metal ions. The amount of adsorbed ions increased with increasing pH and ion concentrations, but with the progress of adsorption a suppression of further adsorption was observed. The adsorption was considered to be due to the formation of surface complexes between metal ions and acid-base surface hydroxyl groups on metal oxides. The postulated surface species were (1 : 1) and (1 : 2) surface complexes with acid hydroxyl groups and (1 : 1) complex with base hydroxyl groups. The stability constants of these surface comlexes were derived by taking the suppression effect into consideration. The equations were fitted to the adsorption isotherms together with the concentration condition equations, and the constants were determined. The obtained values of the constants well reproduced the observed results.

172nd Meeting of The Electrochem. Soc.,
Honolulu, U. S. A., Oct. 18-23, 1987

Effect of Heat Treatment of Hydroxide on the Formation of Composite Oxide Films on Aluminum

H. TAKAHASHI, M. YAMAGAMI, R. FURUICHI, and M. NAGAYAMA*
Fuculty of Engineering, Hokkaido University,
Kita-Ku, N 13 W 8, Sapporo 060, Japan
* Present address: Nippon Chemi-con Co., Toranomon 1 chome,
22-12, Minato-ku, Tokyo 105, Japan

Aluminum specimens covered with hydroxide films were heat-treated at $T_{age}=25\,^{\circ}C-500\,^{\circ}C$ to examine the structural change in the hydroxide film with T_{age} by FTIR, gravimetry, and electron microscopy. The heat-treated specimens were anodized in a neutral borate solution at 80 °C with a constant c. d. form the " composite oxide films ", and the anodizing behavior was followed by measuring the anode potential, and the amout of dissolved Al^{3+} ions as well as by electron microscopy.

It was found that with heat treatment at $T_{age}\leqq 300\,^{\circ}C$, hybroxide films consisting of pseudo-boehmite ($Al_2O_3 \cdot 2.5\,H_2O$) release water to form boehmite ($Al_2O_3 \cdot H_2O$), and that beyond this temperature boehmite changes to anhydrous alumina (Al_2O_3).

For specimens heat-treated at $T_{age}\leqq 300\,^{\circ}C$, heat treatment was observed to facilitate the formation of composite oxide films. For specimens heat-treated at $T_{age}>300\,^{\circ}C$, however, local dissolution of the metal substrate and gas evolution were observed during anodizing.

The formation mechanism of composite oxide films is discussed in relation to the structural change in the hydroxide with heat treatment.

14th Congress of the International Commission for Optics (ICO'87) August 24-29, 1987, Quebec, CANADA

Noise Response of Birefringent Single-Mode Optical Fibers Exposed to External Perturbations

Y. OHTSUKA, Y. IMAI, and M. TSUKADA
Department of Engineering Science, Faculty of Engineering, Hokkaido University,
Sapporo 060, Japan

In the potential areas in which the wave characteristics of an optical eigenmode guided in the optical fiber plays an important role, it is essentially required to have the state of polarization (SOP) of the propagating mode stabilized. The birefringence induced externally in the fiber

causes a change in the SOP and impairs the function of fiber-optic systems, such as coherent optical communications and interferometric sensors. To overcome this undesirable psoblem, birefringent single-mode fibers capable of maintaining the SOP of the guided mode have been developed. Such a fiber was fabricated in such a way as to have a highly anisotropic residual stress in the direction of its cross-section in order that a particulary high birefringence is induced in the propagation direction of light. Nevertheless, the SOP can no longer be pseserved in the presence of some external perturbations such as pressure and temperature changes even if such fibers may be employed. This effect will be a factor of phase and amplitude fluctuations for the progagating modes in the fiber. Since the resulting noise effect would be in close relation to the ultimate performance limitation in the fiber-obtic coherent systems, it is invoked to examine how the birefringent single-mode fiber suffers from such external perturbations. The intent of this paper is to present a correlation processing of the phase and amplitude fluctuations for the orthogonal eigenmodes guided in an externally perturbed birefringent single-mode fiber.

14th Congress of the International Commission for Optics (ICO'87) August 24-29, 1987, Quebec, CASADA

Acousto-Optic Coherence Control and Its Application to Image Shaping

Y. OHTSUKA, S. NAKAMURA, and K. ITOH
Department of Engineering Science, Faculty of Engineering,
Hokkaido University, Sapporo 060, Japan

The coherence control of object illumination is of particular interest for the improvement of the image quality of a small-scale object. In the past, however, it was almost impossible to obtain a practically available, strong, coherence-controllable illumination source. In this context acousto-optic coherence-modification using a laser beam was examined to yield a spatially coherence-controllable illumination. The intent of this paper is to present its principle and to see how the image reshaping of an edge object is made, depending on the illumination condition of spatial coherence.

14th Congress of the International Commission for Optics (ICO'87) August 24-29, 1987, Quebec, CANADA

Heterodyne Fiber-Optic Gyroscope Using Orthogonal Polarizations with Different Frequencies

Y. IMAI, H. KOSEKI, and Y. OHTSUKA
Department of Engineering Science, Faculty of Engineering,
Hokkaido University, Sapporo 060, Japan

A heterodyne detection scheme used in a fiber-optic groscope (FOG) provides a stable scale factor and a wide dynamic range in the phase output. The output, however, is open to the influence on environmental fluctuations, since the output contains a bias phase caused by a frequency difference between two counterpropagating beams in a fiber coil. In order to overcome this, the heterodyne FOG was improved by using a reference beam different in frequency from that of the counterpropagating beams of an identical frequency, or by shifting the frequency in one of the counterpropagating beams after emerging from the fiber coil. However, these approaches lead to alternative problems such as Rayleigh backscattering or a phase fluctuation caused by a frequency shifter (AOM). In this paper, we present a novel approach capable of conceling the inherent noise sources appearing in the conventional heterodyne FOGs.

International Conference on Optical Fiber Sensors (OFS' 88) January 27-29, 1988, New Orleans, Louisiana, U. S. A.

Optical Heterodyne Gyroscope Using Two Reversed Fiber Coils

H. KOSEKI, Y. IMAI, and Y. OHTSUKA
Department of Engineering Science, Faculty of Engineering,
Hokkaido University, Sapporo 060, Japan

In a fiber-optic gyroscope optical heterodyne detection techniques are suited to obtain a stable scale factor and a linear output of the Sagnac phase shift, as well as a wide dynamic range to detect the rotation rate. Nevertheless, it is rather hard to contrive a clever fiber-optic system by wihch a stable output can be produced in the presence of environmental noise factors. For example, the presence of frequency difference between the two optical waves counterpropagating in a fiber coil yields a phase bias in the heterodyne output, which is a factor fluctuating the phase output. Another fluctuating factor also arises from the separate paths transmitted by the two counterpropagating optical waves. In order to overcome such problems, a novel heterodyne

detection scheme has been proposed previously. The proposed system incorporated an orhtogonally polarized two-frequency laser beam in conjunction with a single fiber-optic interferometric system using a polarization-maintaining single-mode fiber-coil. However, it was soon proved that the mode coupling effect between the orthogonal components guided in the fiber coil was an unavoidable fluctuating factor in the gyroscope operation. In this paper another novel scheme is proposed to avoid such drawbacks. Two reversed fiber coils play an essential role in the proposed scheme.

International Symposium on Optical Engineering and Industrial Sensing for Advanced Manufacturing Technologies June 16-30, 1988, Dearborn, Michigan, U. S. A.

Optical Heterodyne-Detection Schemes for fiber-Optic Gyroscopes

Y. OHTSUKA
Department of Engineering Science, Faculty of Engineering,
Hokkaido University, Sapporo 060, Japan

The current state-of-art of the heterodyne scheme for fiber-optic gyroscopes is described. An emphasis is given to the fact that the heterodyne phase-detection scheme offers remarkable advantages, such as stable scale factor, linearlity in the output of the rotation rate, and wide dynamic range of the measurement. Some typical heterodyne fiber-optic gyroscopes are explained. There are strong demands on developing a noval heterodyne fiberoptic gyroscope that can overcome exsisting technical difficulties.

Conference on Optical Communication Theory 1987 (COCT '87) Aug. 27-29, 1987 Karuizawa, Nagano, Japan

Polarization Noise due to Birefringence Fluctuations and Random Mode-Coupling in a Vibrating Fiber Link

Masaaki IMAI
Department of Engineering Science, Faculty of Engineering
Hokkaido University, Sapporo 060, Japan

Polarization noise, which originates from fluctuations of the state of polarization due to forced vibration with a loudspeaker, was observed in a birefringent single-mode fiber link. As a quantitative measure, the signal to noise ratio (S/N) that is a ratio of mean value to a standard deviation of time-varying signals was plotted as a function of angular misalignment and misaligned coupling into fiber system with joint sections. Computer simulation analysis is developed to account for the S/N deterioration. A comparison of experimental plots with simulation results for S/N enables us to identify the origin of the polarization noise.

International Symposium on Fast Excitation Processes at Sanjo-Kaikan, Tokyo, Japan, March 21-26, 1988

Ionic Processes in Pulse-Iraddiated Fluid Solution of Poly(4-Vinylbiphenyl)

M. TANAKA, M. OGASAWARA, and H. YOSHIDA

Reaction of positively and negatively charged poly(4-vinylbiphenyl) (PVB) in 2-methyltetrahydrofuran (MTHF) and 1, 2-dichloroethan (DCE) was studied by pulse radiolysis at room temperature. The solutions of biphenyl were also studied for comparison. A spike in the time-profile of the PVB anion observed in the pulsed MTHF solutions was attributed to retarded geminate recombinations within micro-domains where the polymers were entangled. Results of the pulse radiolysis measurements on PVB in DCE indicated the positively-charged biphenyl-groups interacting with neighboring neutral biphenyl groups in the polymers. The PVB cation decayed following second-order kinetics with a rate constant much smaller than that expected from a theory for diffusion-controlled reactions based on a simple model.

The 24th National Heat Transfer Conference, Pittsburgh, Pennsylvania, U. S. A., August 9-12, 1987

A Direct Simulation Method for the Analysis of Radiative Heat Transfer in Furnaces

HIROSHI HAYASAKA
Faculty of Engineering, Hokkaido University, Sapporo 060, Japan

Abstract

A new numerical model called the "radiative teat ray method" was develoed to simulate directly radiative heat transfer in furnaces. This paper describes the theoretical development and calculation procedure of this method and compares it with the zone method developed by Hottel. The results showed the radiative heat ray method to be more effective and flexible than the various conventional methods which have been used to solve furnace problems.

The Combustion Institute: Joint Conference Western States and Japanese Sections, Honolulu, Hawaii, November 22-25, 1987

A Simple Method of Estimating Thermal Radiation From Pool Fires

HIROSHI HAYASAKA, HIROSHI KOSEKI*
Faculty of Engineering, Hokkaido University, Sapporo 060, Japan
* Fire Research Institute, Mitaka 181, Japan

Abstract

Estimation of thermal radiation from pool fires is an important problem to be solved in fire prevention and combustion science. In this paper, a simple analysis method, which is called the one mesh model, is used to estimate thermal radiation from pool fires of tanks with diameters of 0.3 m to 6 m.

ICFRM-3 Third International Conference on Fusion Reactor Materials, Karlsruhe, West Germany Oct. 4-8, 1987

Microstructural Change and Hydrogen Behavior in Implanted Metals

K. KAMADA, A. SAGARA, H. KINOSHITA* and H. TAKAHASHI*
Institute of Plasma Physhcs, Nagoya University, Nagoya 464, Japan
* Faculty of Engineering, Hokkaido University, Sapporo 060, Japan

In the present paper, we have made systematic observations of the transmission electron microscopy (TEM) structures of Al samples implanted with hydrogen to fluences lower and higher than a critical fluence required for the collapse of the implanted hydrogen profile measured with ERD. The TEM observations reveal a drastic change of bubble structure in a subsurface layer in coincidence with the change in the depth profile, producing a tunnel like microstructure beneath the surface. Stereoscopic observations of the bubble structures indicate a correlation between the hydrogen profile and the depth distribution of bubbles.

ICFRM-3 Third International Conference on Fusion Reactor Materials, Karlsruhe, West Germany Oct. 4-8, 1987

Behavior of Implanted Hydrogen under Irradiation in Forritic/Martensitic Steels

F. WAN, H. TAKAHASHI, S. OHNUKI and R. NAGASAKI
Metals Research Institute, Faculty of Engineering
Hokkaido University, Sapporo 060, Japan

The aim of this study is to clarify the behaviors of hydrogen under irradiation in ferritic martensitic stainless steel Fe-10Cr-2Mo-1Ni. To compare the effect of alloying elements, Fe-10Cr, Fe-1Ni alloys and pure Fe were also examined. Hydrogen was implanted into the specimens by an ion accelerator or chemical cathodic charging method, followed by electron irradiation in a HVEM at a temperature from R. T. to 773 K. In Fe-10Cr-2Mo-1Ni, Fe-10Cr, and Fe-1Ni specimens implanted by hydrogen, streak patterns in electron diffraction formed during electron irradiation at 623-723 K. The streak patterns and minute fine microstructures were observed along [100] directions. By annealing at 873 K for one hour the streak patterns disappeared. However, the streak patterns could not be observed by irradiation without hydrogen, and also no streak patterns were formed in pure Fe implanted with hydrogen.

From the results it can be considered that the streak patterns are due to the formation of the complexes of Cr or Ni which were segregated under irradiation to defect clusters with hydrogen atoms.

ICFRM-3 Third International Conference on Fusion Reactor Materials, Karlsruhe, West Germany Oct. 4-8, 1987

Effect of Helium on Radiation-Induced Segregation in Stainless Steels

S. OHNUKI, H. TAKAHASHI and R. NAGASAKI
Metals Research Institute, Faculty of Engineering
Hokkaido University, Sapporo 060, Japan

The aim of this study is to clarify the effect of preinjected and dual irradiated He on radiation-induced segregation 316 austenitic and ferritic (Fe-Cr alloys) stainless steels were used. He was implanted with an accelerator to 0-5,000 atppm, and then electron-and ion irradiated in HVEM. Radiation-induced segregation was measured by an analytical microscope. In austenitic steel without He, the irradiation caused the enrichment of Ni and the depletion of Cr on grain boundaries. By the presence of He, the enrichment of nickel was suppressed and the depletion of Cr was enhanced. The diffusion constant during irradiation, which was calculated from the segregation profiles, showed higher valuse by several orders of magnitudes compared to thermal conditions. Moreover, with the increasing of He content the diffusion constant of Ni decreased, while that of Cr increased. In contrast, in ferritic alloys, the depletion of Cr was suppressed by the addition of He. The behavior of radiation induced segregation was discussed on the basis of point defect concentration, the defect sink and the mobility of solutes.

ICFRM-3 Third International Conference on Fusion Reactor Materials, Karlsruhe, West Germany Oct. 4-8, 1987

Cavity Formation by Hydrogen Injection in Electron-Irradiated Austenitic Stainless Steel

T. KATO, K. NAKATA, S. OHNUKI* and H. TAKAHASHI*
Hitachi Research Laboratory, Hitachi Ltrd.,
3-1-1 Saiwa-cho, Hitachi-shi, Ibaraki 317, Japas
* Metals Research Institute, Faculty of Engineeing
Hokkaido University, Sapporo 060, Japan

The interaction between defects and hydrogen atoms in austenitic stainless steel is investigated in the specimens with defects produced by electron-irradiation. Cavities are formed in the matrix by the hydrogen injection of 1.8×10^{22} ions/m^2 without electron damage. The cavities are not related with interstitial loops. The cavity density increases with the hydrogen injection doses. In the regions pre-irradiated with electrons, small vacancy clusters were formed by and grew into the cavities after the hydrogen injection. The cavities increase with pre-irradiation dose, and the density is constant in the specimen hydrogen injected. The cavities formed by the hydrogen injection gradually decrese at pre-irradiation above 2 dpa, although the vacancy cluster density is not changed. The hydrogen atoms injected seems to escape from the surface through dislocations, because the dislocation density is fairly high in the specimen preirradiated above 2 dpa.

ICFRM-3 Third International Conference on Fusion Reactor Materials, Karlsruhe, West Germany Oct. 4-8, 1987

The Influence of Solutes Segregation on Void Swelling in Fe-CrBased Alloy

H. TAKAHASHI, F. A. GARNER*, S. OHNUKI
H. KINOSHITA and R. NAGASAKI
Metals Research Institute, Faculty of Engineering
Hokkaido University, Sapporo 060, Japan
* Hanford Engineering Development Laborators
Richland WA99352, U. S. A

Austenitic and ferritic Fe-Cr-Mn alloys were investigated by electron irradiation and compositional analysis due to EDS after iradiation, in which the compositions were (5-15)%Cr and (7-20)%Mn. The irradiations were carried out by a HVEM at a dose rate of 2×10^{-2} dpa/s

at 623–823 K. Voids were observed in each Fe-Cr-Mn alloy between 623 K and 723 K. A most remarkable void formation was recognized near 673 K. However, the amount of swelling depended on the initial alloy compositions, and swelling tended to be reduced effectively in the alloys with lower Mn and/or Cr and Mn depleted in irradiated area. A remarkable compositional change occurred at the temperature of swelling maximum. These irradiation-induced compositional changes may also induce the phase transformation from austenitic to the ferritic phase, even though being restricted to narrow region at an inner region of void and/or grain boundary. Therefore, these phase transformation might be more rapidly caused under irradiation to approach the ferritic region in the phase diagram.

ICFRM-3 Third International Conference on Fusion Reactor Materials, Karlsruhe, West Germany Oct. 4–8, 1987

Void Formation and Precipitation in Neutron Irradiated Vanadium-based Alloys

S. OHNUKI, H. TAKAHASHI, H. KINOSHITA and R. NAGASAKI
Metals Research Institute, Faculty of Engineering
Hokkaido University, Sapporo 060, Japan

The aim of this study is to clarify the effect of alloying elements in vanadium based alloys on void formation and phase stability at low dose levels. Voids were formed in V and its alloys except in V-C and V-Ti. For V and V-Mo, voids were developed homogeneously, but the swelling was not so large. In contrast, V-Cr alloy showed heterogeneous distribution of voids, which were nucleated preferentially at the radiation-induced precipitates. The swelling of V-Cr was highest in these alloys. The precipitation was confirmed in V-Ti, V-C and V-Cr. In V-C, the large precipitates were pre-existing V_2C which were relatively stable. In V-Ti, rodshaped precipitates formed during irradiation, which are identified as TiO. The precipitates in V-Cr were nucleated preferentially on pre-existing dislocations and grain boundaries, they were assumed to be composed of segregated Cr and interstitial impurities.

ICFRM-3 Third International Conference on Fusion Reactor Materials, Karlsruhe, West Germany Oct. 4-8, 1987

The Effects of Damage-Structures on the Mechanical Properties of Neutron Irradiated Vanadium

H. TAKAHASHI, S. OHNUKI, H. KINOSHITA and R. NAGASAKI
Metals Research Institute, Faculty of Engineering
Hokkaido University, Sapporo 060, Japan

To investigate the damage structure on mechanical properties of vanadium, pure V and C containing V (V-0.3 at% C alloy) were irradiated with 14 MeV neutron (RTNS-II). Irradiations were performed at room temperature to fluences of 1.4×10^{17} n/cm^2 to 2.7×10^{18} n/cm^2. In both specimens of pure V and V-0.3 at% C alloy, the structures of cascade damage were observable. The density of damage structures in V-C alloy was higher than that in pure V, and increased with the increasing of irradiation fluences. Furthermore, the mean size of the damage structure was smaller in V-C alloy compared with pure V. These differences of damage structures between pure V and V-C alloy would are conjectured to be caused by the effect of interaction between carbon atoms and damage structures. The hardening phenomena were recognized sensitively in tensile tests. The hardening rate with irradiation fluences was greater in V-C alloy than for pure V. This suggests that the contribution process to hardening may be different between pure V and V-C alloy, the smaller damage structures in V-C alloy with a higher density was more strengthened due to C.

The paper was presented at the 5 th International Conference " High Technology Joining " of the British Association for Brazing & Soldering, Brighton, England, Nov. 3-5, 1987

Diffusion Joining of Ceramics with Metals or with Ceramics

Koji ATARASIYA and Ryukichi NAGASAKI
Metals Research Institute, Faculty of Engineering
Hokkaido University, Sapporo 060, Japan

The diffusion joining of magnesia to nickel, iron or cobalt and of alumina to chromium at temperatures from 1273 to 1673 K was examined using a low pressure process that does not require

heterogeneous fillers. The joining of magnesia to magnesia and of alumina to alumina was also studied by the same method in which nickel or chromium is used for the fillers respectively.

The fracture strength up to 70 MPa was achieved by three-point bending tests. The cross-sectional microstructures and fracture surfaces were observed by EPMA, SEM and EDX.

The diffusion in the related quasibinary oxides systems was discussed and the mutual diffusion coefficients were determined from the concentration distributions obtained with the aid of EPMA analysis.

Proc. International Meeting on Advanced Materials, Tokyo, May 30-Jun. 3, 1988

Diffusion Bonding of Alumina to Nickel-Chromium Alloy

Koji ATARASHIYA
Metals Research Institute, Faculty of Engineering
Hokkaido University, Sapporo 060, Japan

The diffusion bondings of alumina to nickel-chromium alloys at 1623 K for 597.6 ks were examined.

An alloy plate was placed between two alumina blocks, and this set was annealed under null pressure in air.

Chromium in nickel-chromium alloys predominantly reacted with gaseous oxygen in air into chromia on the surface of the alloys. Because alumina and chromia are completely soluble with each other, the bonding parts are made of the alumina-chromia solid solution and excess chromia layers.

To improve the interfacial structure of bonding parts, nickel-metal foils were used as fillers. In this case, the initial oxidation of chromium was prevented, then, the bonding parts consisted of the alumina-chromia solid solution alone. The nickel-metal foils diffused into the bulk of alloys and did not remain in the bonding parts.

The fracture strength up to 12 MPa was achieved by three-point bending tests. The cross-sectional structures were observed by SEM and the concentration distributions of bonding parts were determined by EDX.

Proceeding of International Meeting on Advanced Materials, Tokyo, Japan, May 30 -June 3, 1988

Solid-State Reactions Between Ni-Cr Alloys and Si_3N_4

Kazuya KUROKAWA and Ryukichi NAGASAKI
Metals Research Institute, Faculty of Engineering
Hokkaido University, Sapporo 060, Japan

The solid-state reactions between Ni-Cr alloys and Si_3N_4 were studied to clarify the effect of chromium on the morphologies of reaction layers and the behaviors of constituents of both materials.

The reaction couples used were Ni/Si_3N_4, Ni-7Cr/Si_3N_4, Ni-15CrKSi$_3N_4$, and Ni-25Cr/Si_3N_4. The ractions were carried out in Ar atmosphere at temperatures ranging from 1273 K to 1473 K. The reacted specimens were examined using X-ray diffraction, SEM-EDX, and EPMA.

It was recognized from the cross-sectional observations of reaction layers that the development of reaction layer proceeded into Si_3N_4 in all systems. Thus, the reaction was found to be mainly dominated by the diffusion of alloy constituents into Si_3N_4. The growth of the reaction layer was dependent on the chromium concentration in alloy, and the Ni-7Cr aloy reacted with Si_3N_4 to a significantly more extent than Ni and other Ni-Cr alloys. The concentrations of Ni and Cr throughout the reaction layers approximately corresponded to the alloy composition, except for the Ni-25Cr/Si_3N_4 system. Namely, the concentration of Si in the reaction layer was not sufficient to form a silicide. Furthermore, the effects of Cr concentration in alloy and additives such as Al_2O_3 and Y_2O_3 in Si_3N_4 on joining were also discussed.

Proceeding of the 14th International Symposium on the Effects of Radiation on Materials, Andover, U. S. A, June 27-30, 1988

Solid-State Reactions Between V-Base Alloys and Silicon Carbide at High Temperatures

Kazuya KUROKAWA, Ken-ichiro MIYAMOTO and Ryukichi NAGASAKI
Metals Research Institute, Faculty of Engineering
Hokkaido University, Sapporo 060, Japan

In order to obtain data on the extent of reaction, the products, and the morphology of reaction layer, reaction couples consisting of V/SiC, V-15Cr/SiC and V-15Ti/SiC were studied. The reactions were carried out in an argon gas stream at temperatures ranging from 1173 K to 1523 K. The interfacial reactions were mainly dominated by the diffusion of carbon into the metal and alloys leading to the formation of carbide layers which were ($VC+V_2C$) layer in the V/SiC and V-15Cr/SiC systems and (V_2C+TiC) layer in the V-15Ti/SiC system. Furthermore, the internal carbonization of vanadium in the V-15Cr/SiC and titanium in the V-15Ti/SiC was observed in the alloy-matrix. The silicide V_5Si_3 was also formed between SiC and the uarbide layer in all reaction systems, but its thickness was very thin compared to that of the carbide layer. It was recognized that the growth of overall reaction layer in each system followed a parabolic rate law. Furthermore, the resistivity of reaction layers formed on the metal and alloys against high temperature oxidation was also examined.

Proceedings of '87 International Symposium & Exhibition on Science and Technology of Sintering, Tokyo, Japan, November 4-6, 1987

Reactivity of Sintered SiC with Metals

Kazuya KUROKAWA and Ryukichi NAGASAKI
Metals Research Institute, Faculty of Engineering
Hokkaido University, Sapporo 060, Japan

Reaction couples consisting of Fe/SiC, Ni/SiC, Cr/SiC, Ti/SiC, Mo/SiC and V/SiC were studied to clarify the structures and growth rates of the reaction layers. The reactions were carried out in evacuated quartz-ampoules at temperatures ranging from 1173 K to 1373 K. In the Fe/SiC and Ni/SiC systems, the reaction was mainly found to be dominated by the diffusion of Fe and Ni, respectively, into SiC leading to the formation of silicides (Fe_3Si, Ni_2Si) and graphite. In the

Cr/SiC and Ti/SiC systems, the reaction was mainly dominated by the diffusion of Si and C into the metal leading to the formation of silicides (Cr_3Si, Ti_5Si_3) and carbides ($Cr_{23}C_6$ and Cr_7C_3, TiC). In the Mo/SiC and V/SiC systems, the reaction was dominated by the diffusion of C into the metal leading to the formation of carbides (Mo_2C, VC and V_2C). The growth rates of reaction layers in these systems was closely related to the reaction products.

The 2nd Japan-China Symposium on Coal and C_1 Chemistry, Tokyo, May 9-11, 1988

Upgrading of Coal Hydrogenation Liquids to Produce Simplified Aromatic Ring Material as Chemical Feeds

YOKOYAMA Susumu, MISHIMA Hideji, SATOU Masaaki and SANADA Yuzo
Faculty of Engineering, Hokkaido University
Sapporo 060, Japan

Primary coal hydrogenation liquid, SRC II heavy distillate, was upgraded by secondary hydrogenation to a useful chemical feedstock, simplex aromatic components without substitution of their rings. Upgrading reactions were performed with MoO_3-Al_2O_3 catalyst under an initial hydrogen pressure of 20 kg/cm^2 for various timespans at 550℃. The production of compound classes, separated by NH_2 column HPLC, indicated characteristic reactions occurring during upgrading, namely hydrodeheterogenation and dealkylation. Shorter and fewer alkyl groups left on aromatic rings were created predominantly in the upgraded oil according to the processing reaction and bare ring aromatics in various compound casses.

The 1st Korea-Japan Symposium on Fluidization, Seoul, Korea, 6-8 August 1987

Nitric Oxide Emission From FBC and CFBC

T. HIRAMA* and T. CHIBA
Coal Research Institute, Hokkaido University
Kita-ku, Sapporo 060, Japan
* Department of Energy and Resources Engineering
Government Industrial Development Laboratory, Hokkaido
Toyohira-ku, Sapporo 004, Japan

Systematic measurements were made on the nitric oxide (NO_x) emission levels from different types of experimental fluidized bed coal combustors, i. e three bubbling bed combustors (FBC) and a circulating bed combustor (CFBC). Among the FBC types, the lowest emission level was observed in the case of a dual-bed mode operation with a staging air supply. The emission level from the CFBC combustion was as low as that from the dual-bed combustion when silica sand particles were used as a circulating solid. However, when the fresh limestone particles were employed as a circulating solid, the emission levels were much higher than those for the spent limestone particles. This difference in the emission levels dependent on the circulating solid could qualititatively be explained by the reaction model previously proposed by the authors.

The 1st Korea-Japan Symposium on Fluidization, Seoul, Korea, 6-8 August 1987

Application of Solid Mixing and Segregation Models for the Estimation of Defluidisation and Break-Through Curves in Gas Fluidised Beds

T. CHIBA*, S. CHIBA** and A. W. NIENOW***
* Coal Research Institute, Hokkaido University
N13 W8 Kita-Ku, Sapporo 060, Japan
** Department of Energy and Resources Engineering
Government Industrial Development Laboratory, Hokkaido
Toyohira-ku, Sapporo 004, Japan
*** Department of Chemical Engineering, University of Birmingham
P. O. Box 363, Birmingham, B15 2TT, UK

Existing mathematical models and correlations between the model parameters and operating variables are utilised for predicting concentration profiles of jetsam particles in a segregating gas fluidised bed. Then, the Naimer *et al.* model is applied to explain the formation of defluidised jetsam layer near the bottom of the bed and the break-through curve of jetsam in beds of binary solid particles in throughflow. For variations of the defluidised layer height with the gas velocity and the bulk bed composition, reasonably good agreements are obtained by coinciding the forma-

tion of a pure jetsam layer to the occurrence of defluidisation. It is also shown that the model can basically explain observed break-through curves by assuming a pseudo-steady state for the bulk bed composition. For improved prediction and extensive application of the model, further work is needed on bubble growth, wake volume fraction, rates of solid exchange between the wake and the bulk phase, and of jetsam segregation in the bulk phase.

1987 International Conference on Coal Science, Maastricht, Netherlands, 26-30 October 1987

Effect of Preasphaltene Solubility on Apparent Viscosity of Coal Slurry During High Pressure Liquefaction

C.-R. DENG, H. MORITOMI, Y. SANADA and T. CHIBA
Coal Research Institute, Faculty of Engineering
Hokkaido University, Sapporo 060, Japan

In an effort to elucidate the mechanisms of viscosity change of coal slurry during high pressure liquefaction, the apparent viscosity as well as the extent of reaction was measured in a 50 cm^3 microautoclave by fitting a torque detector to the stirrer. Experiments were carried out in systematic combinations of the operating conditions. Experimental results showed that the apparent viscosity increases with the amount of preasphaltene residing on the surface of each coal particle while it decreases with rapid deposition of the viscous coal particles onto the reactor and stirrer surface, with gradual dissolution of preasphaltene into the solvent and with a rather slow chemical conversion of preasphaltene to a lower molecular-weight species. The solubility parameter for mixed solvent was calculated from data in the literature for pure solvent and reasonably well correlation was seen with the height of viscosity peak. Furthermore, the peak heights for different slurries were related to the difference between solubility parameters of preasphaltene and the solvent. The result demonstrated that the peak appeared for slurries with the difference greater than 2 $(cal \cdot cm^3)^{1/2}$.

18th Biennial Conference on
Carbon, Worcester, U. S. A
19-24 July 1987

Fractionation of Coal Tar Pitch with Iodine

T. YOKONO, M. SASAKI, T. IMAMURA and Y. SANADA
Faculty of Engineering, Hokkaido University
Sapporo 060, Japan

Chloroform solubles of coal tar pitches with an addition of iodine were divided into three fractions, that is, iodine adducts (Fr-1A, Fr-2A) and no adducts (Fr-3). The chemical compositions of the fractions thus obtained were analysed by means of flame ionization detector-thin layer chromatography (TLC-FID). It was found that more than 50% of the resin component was concentrated in the fractions of iodine adducts (Ar-1A, Fr-2A) and aromatics were concentrated in Fr-3. Analysis of the three fractions was also pursued using ^{1}H-NMR.

Charge transfer complexes of polyaromatic hydrocarbons with iodine were also studied and compared with fractionations of coal tar pitch/iodine systems.

18th Biennial Conference on
Carbon, Worcester, U. S. A
19-24 July 1987

Characterization of Solid Additives Dispersed in Pitch Matrix

Kazuyuki MURAKAMI, Tetsuro YOKONO and Yuzo SANADA
Faculty of Engineering, Hokkaido University
Sapporo 060, Japan

Harry MARSH
Northern Carbon Research Laboratories
University of Newcastle upon Tyne
Newcastle, England

The effect of solid additives on the pyrolysis of pitch were studied using ESR and FT-IR spectroscopies. For pitch/carbon black system, the spin concentration varied characteristically with the increasing carbon black content.

The change of radical concentration of pitch/carbon black system are discussed in relation to the physical and chemical properties of solid additives.

18th Biennial Conference on Carbon, Worcester, U. S. A
19-24 July 1987

Characterization of Carbonaceous Solids by H_2S Evolution and ESR Measurements

Tetsuro YOKONO, Kazuyuki MURAKAMI and Yuzo SANADA
Eaculty of Engineering, Hokkaido University
Sapporo 060, Japan

Yasuhito INOUE
Asahi Carbon Co Ltd, 252 Niigata, Japan

In order to evaluate the characteristics of the surface for carbonaceous solids (coke powder, carbon black, quinolin insolubles in coal tar pitch), elementary sulfur was added to the solid and temperature dependence of evolved hydrogen sulfide was measured by a FPD gas chromatography.

The characterization of the carbonaceous solids was also assessed by ESR. A relationship between the H_2S evolution data and ESR parameters are studide.

1987 International Conference on Coal Science, Maastricht, Netherlands, 26-30 October 1987

Carbonization Behaviour of Transalkylated Low Rank Coal

H. KUMAGAI, T. YOKONO and Y. SANADA
Faculty of Engineering Hokkaido University
Sapporo 060, Japan

Transalkylation reactions of a non-coking coal, Taiheiyo coal, using alkyl acceptor, 9, 10-dihydroanthracene (DHA) or naphthalene, was carried out in the presence of super acid catalyst of trifluoromethane sulphonic acid. The carbonization behaviour of transalkylated Taiheiyo coal was studied with respect to mesophase formation. The development of optical texture in coke was affected strongly by the nature and quantity of alkyl acceptor introduced into the coal molecule. The variation in spin concentration of transalkylated coal during the carbonization reaction was monitored using high-terperature e. s. r. The improvement of the carbonization property of transalktlated coal was discussed in terms of the stabilization of radicals. A schematic model of the carbonization reaction of transalkylated coal is proposed on the basis of these observations.

Fifteenth IEEE International Conference on Plasma Science Sheraton Hotel and Towers Seattle, Washington 6-8 Juse 1988

The Seed Material Number Density and Plasma Temperature Profile in the Boundary Layer of an MHD Cannel

Y. AOKI, H. KITAGAWA, E. NAKAMURA, E. OKA
K. SUMI, S. OIKAWA, T. KASAHARA,
N. KAYUKAWA and H. YAMAZAKI
Hokkaido Univ., Kita 13 Nishi 8 Sapporo 060, Japan

Abstract

The seed material (porassium) atom density distribution of plasma adjacent to the electrode in an MHD generator channel relatess significantly to the occurance and behavior of arcs on the electrode. The purpose of this study is to derive the distributions of seed atom density, seed ratio and temperature profile, when using potassium as the seed material, from optical thickness and temperatures measured by the light polarization line-revesal using the vibration mirror method.

Fifteenth IEEE International Conference on Plasma Science Sheraton Hotel and Towers Seattle, Washington 6-8 June 1988

An Improvement of SiC Insulator Performances for MHD Generator Channels

T. OKUO
Eletrotechnical Laboratory, 1-1-4 Umezono, Tsukuba, Japan 305
T. OOKOUCHI
Hitaci Ltd., 832-2 Horiguchi, Katsuta, Ibaraki, Japan 312
Y. AOKI
Hokkaido Univ. N13 W8, Sapporo, Japan 060

Abstract

An water cooled ceramic-metal bonded wall element has been developed for a coal combustion MHD generator channels. It was shown that the excellent characters of the stability under for high heat flux and thermal shock conditions and good electrical insulation performance in the splash test stand and the small scale MHD simulation channel of ETL COM Fired Facility.

Temperature of the compliant and brazed layer rises significantly with heat flux, and cause

troubles such as oxidation, corrosion and deterioration of strength of the compliant material. Not only an application for the ceramics-metal bonding with high reliability, but also an improvement of allowable heat flux as high as posible.

New compliant material made of grooved copper and a high reliable metallizing and brazing method were developed. It will make possible to raise up the limitation of allowable heat flux up to 1,000 W/cm^2.

24 mm^2-10^t SiC ceramics (HITACERAM SC101) was brazed on a water cooled copper substrate with the grooved copper compliant layer. An Au and an Ag-Cu eutectic alloy were employed for metallizing and brazing materials, respectively. Both of the metallizing and brazing to the SiC tile were performed in a vaccum furnace. That test module, which consists of these elements, was examined under the splash test apparatus, using a colliding jet of high speed combustion gas plasma.

26th Symposium on the Engineering Aspects of Magnetohydrodynamics June 20-22, 1988 Nashville, Tennessee

Plasma Temperature Profile of MHD Channel

Y. AOKI, H. KITAGAWA, S. OIKAWA, E. NAKAMURA
H. IMAJYO, N. KAYUKAWA and H. YAMAZAKI
Hokkaido Univ., Kita 13 Nishi 8 Sapporo 060, Japan
Y. OZAWA
Hokkaido Automotive College, Nakanoshima 2-7 Sapporo 060, Japan

The space-dependent plama temperature profile in the boundary layer within the channel of a combustion MHD generator with an externally applied magnetic field was measured by means of a newly devised method using a potassium light-polarization line-reversal technique. The measurements were performed at four hundred positions across the boundary layer during a period of 0.4 ms and we take those 16 data set in a period of 8 ms continually. We invited a true temperature derive for the correction of measured temperature profile, was caused low-temperature boundary layer, by the way of 1/n-th temperature profile.

26th Symposium on the Engineering Aspects of Magnetohydrodynamics June 20-22, 1988 Nashville, Tennessee

Electrode Development and Testing for Coal-Fired MHD Generator

T. OKUO, Y. KUSAKA, K. TAKANO, and K. KATO
Eicctrotechnical Laboratory
1-1-4 Umezono Tsukuba-Shi Ibaraki 305, Japan

Y. AOKI
Faculty of Engincering Hokkaido University
Sapporo 060, Japan

Abstract

A summary of technical results on the development of MHD generator electrodes presented. The studics were performed on the are current phenomena and wastage of slagging anodes[1], and on the development of new materials which may be suitable altenatives to platinum[2] anodes for use in long-duration, open cycle coal-fired MHD generator operations.

Engineering tests under simulated open cycle coal-fired MHD operating conditions were carried out in the 1.5 MW ETL COM-Fired Test Facility (ECFTF)[3), 4)]. These tests were conducted on metallic (Pt, Cr, Fe, Ni, EB26-1, SUS304, IN600, 80Co-20Ni, 60Ni-20Cr-20w), cermet ($K63-5Al_2O_3$, $K63-20Al_2O_3$), and dence ceramics ($ZrO_2-8Y_2O_3$, $ZrO_2-8Y_2O_3-10SiC$, MgO-MgO/Ni, $ZrO_2-25CeO$, $ZrO_2-25CeO-TiO_2$, $ZrO_2-5CeO_2-30LaCaCrO_3$, $LaCaCrO_3-25LaSiO_3$, $LaCaCrO_3-75LaNiO_3$) for hot type (Te=1,500-1,800℃) anode electrodes. Splash experiments[5] under fuelrich COM combustion conditions were conducted on these anode electrodes. The test conditions were involved plasma, seed, slag, electric current density ($J=1.3A/cm^2$) and heat flux ($\Phi=150-250W/cm^2$) simulation of the MHD power generating channel.